TENANT IMPROVENMENTS FOR
ECONOMIC DEVELOPMENT AND CHILD SUPPORT SERVICES
2420 6TH STREET, EUREKA, CA

VICINITY MAP

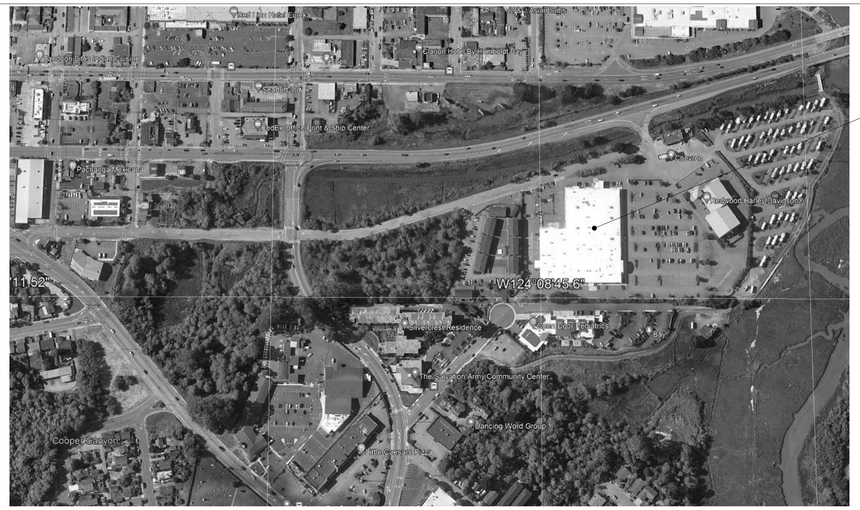

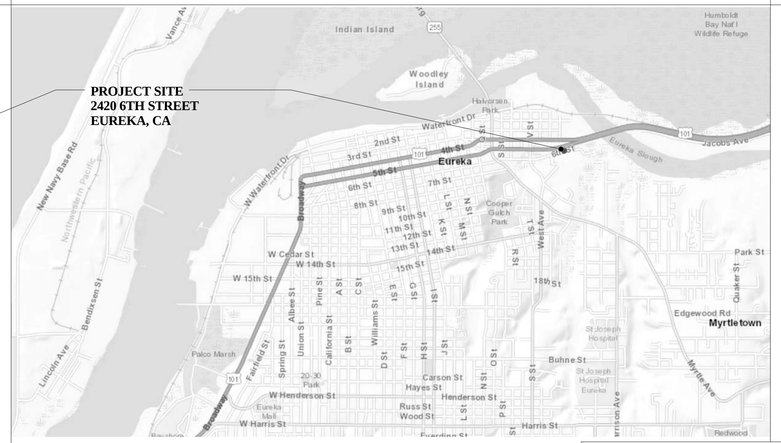

NORTH

PROJECT DESCRIPTION

SCOPE INCLUDES:

BASE BID:

TENANT IMPROVEMENTS TO THE INTERIOR FOR THE OFFICES OF THE HUMBODLT COUNT ECONOMIC DEVELOPMENT

SCOPE INCLUDES REMOVAL AND CONSTRUCTION OF NON-BEARING WALLS, RETROFITTING AND RELOCATING OF ELECTRICAL LIGHTING AND POWER TO ACCOMODATE NEW SPACE PLANNING. AND ASSOCIATED ADA ACCESSIBILTY IMPROVEMENTS

BID ALTERNATE ONE: THE INTERIOR FOR THE OFFICES OF THE HUMBODLT COUNT ECONOMIC DEVELOPMENT AND CHILD SERVICES DEPARTMENTS DESIGNATED ON DETAIL 1 / A-0

SCOPE INCLUDES REMOVAL AND CONSTRUCTION OF NON-BEARING WALLS, RETROFITTING AND RELOCATING OF ELECTRICAL LIGHTING AND POWER TO ACCOMODATE NEW SPACE PLANNING. AND ASSOCIATED ADA ACCESSIBILTY IMPROVEMENTS

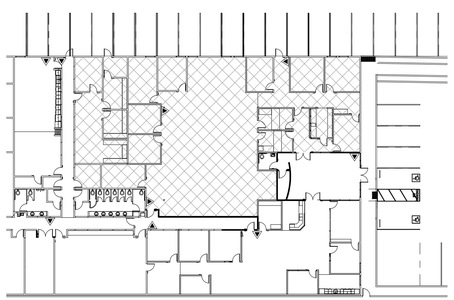

BID ALTERNATE ONE

BASE BID - ALL WORK NOT INDICATED

1 / A-0 BASE BID / ALERNATE ONE
N.T.S.

APPLICABLE CODES

PARTIAL LIST OF APPLICABLE CODES
2019 California Administrative Code (CAC). Part 1. Title 24 CCR* 2019 California Building Code (CBC), Part 2. Title 24 CCR (2018 International Building Code, Vol. 1 & 2. and 2019 California amendments
2019 California Electrical Code (CEC). Part 3. Title 24 CCR
(2017 National Electrical Code and 2019 California Amendments)
2019 California Mechanical Code (CMC), Part 4. Title 24 CCR
(2018 IAPMO Uniform Mechanical Code and 2019 California amendments)
2019 California Plumbing Code (CPC), Part 5, Title 24 CCR
(2018 IAPMO Uniform Plumbing Code and 2019 California amendments)
2019 California Energy Code (CEC). Part 6, Title 24 CCR
2019 California Fire Code (CFC), Part 9. Title 24 CCR
(2018 International Fire Code and 2019 California Amendments)
2019 California Existing Building Code (CEBC). Part 10. Title 24 CCR
(2018 International Existing Building Code and 2019 California Amendments)
2019 California Green Building Standards Code (CALGreen), Part 11, Title 24 CCR
2019 California Referenced Standards Code, Part 12. Title 24 CCR
Title 19 CCR, Public Safety, State Fire Marshal Regulations
2016 ASME A17.1/CSA B44-13 Safety Code for Elevators and Escalators

PARTIAL LIST OF APPLICABLE STANDARDS

2010	ADA Standards for Accessibility Design	
NFPA 13	Standard for the Installation of Sprinkler Systems (CA amended)	2016 Edition
NFPA 14	Standard for the Installation of Standpipe and Hose Systems	2016 Edition
NFPA 17	Standard for Dry Chemical Extinguishing Systems	2016 Edition
NFPA 17A	Standard for Wet Chemical Extinguishing Systems	2016 Edition
NFPA 20	Standard for the Installation of Stationary Pumps for Fire Protection	2016 Edition
NFPA 22	Standard for Water Tanks for Private Fire Protection	2016 Edition
NFPA 24	Standard for the Installation of Private Fire Service Mains and Their Appurtenances	2019Edition
NFPA 72	National Fire Alarm and Signaling Code (CA amended);	2019 Edition
NFPA 80	Standard for Fire Doors and Other Opening Protectives	2019 Edition
NFPA 2001	Standard on Clean Agent Fire Extinguishing Systems	2018 Edition
UL 300	Standard for Fire Testing of Fire Extinguishing Systems for Protection of Commercial Cooking Equipment	2019 (R2010)
UL 464	Audible Signaling Devices for Fire Alarm and Signaling Systems. Including Accessories	2016 Edition
UL 521	Standard for Heat Detectors for Fire Protective Signaling Systems	1999 Edition
UL 1971	Standard for Signaling Devices for the Hearing Impaired	2002 Edition
ICC 300	Standard for Bleachers. Folding and Telescopic Seating. and Grandstands	2017 Edition

For a complete list of applicable NFPA standards re1eto 2016 CBC (SFM) Chapter 35 and California Fire Code Chapter 80.
See California Building Code, Chapter 35, for State of California amendments to the NFPA Standards.

GENERAL NOTES

1. ALL WORK CONFORM TO APPLICABLE CODES, REGULATIONS, LAWS AND ORDINANCES AS REQUIRED AND BY THE CODES AND REGULATIONS LISTED IN THESE CONSTRUCTION DOCUMENTS AND MANUALS..
2. VERIFY ALL DIMENSIONS IN THE FIELD. NOTIFY THE ARCHITECT OF ANY DISCREPANCY AND OBTAIN CLARIFICATION BEFORE PROCEEDING WITH THE AFFECTED WORK. FOLLOW NUMERICAL DIMENSIONS: DO NOT SCALE, USE DATUM POINTS TO START DIMENSION STRING LAYOUT.
3. FLOOR PLAN DIMENSIONS SHOWN ARE TO FACE OF FINISH OR CENTERLINE OF COLUMNS, UNLESS OTHERWISE NOTED. SEE SYMBOLS.
4. BEFORE BEGINNING WORK AT THE SITE, WHERE POSSIBLE AND THROUGHOUT THE COURSE OF WORK, INSPECT AND VERIFY THE LOCATION AND CONDITION OF ITEMS AFFECTED BY THE WORK UNDER THIS CONTRACT AND REPORT DISCREPANCIES TO ARCHITECT BEFORE DOING THE WORK RELATED TO THAT BEING INSPECTED.
5. THE ARCHITECTURAL DRAWINGS SHOW PRINCIPAL AREAS WHERE WORK MUST BE ACCOMPLISHED UNDER THIS CONTRACT. INCIDENTAL WORK MAY ALSO BE NECESSARY IN AREAS NOT SHOWN ON THE ARCHITECTURAL DRAWINGS DUE TO CHANGES AFFECTING EXISTING MECHANICAL, ELECTRICAL PLUMBING OR OTHER SYSTEMS. SUCH INCIDENTAL WORK IS ALSO PART OF THIS CONTRACT.
6. DO NOT DRILL OR CUT EXISTING JOISTS, BEAMS, COLUMNS OR OTHER STRUCTURAL ELEMENTS UNLESS SPECIFICALLY INDICATED.
7. PREPARE, SUBMIT AND RECIEVE APPROVAL OF SLEEVE AND OPENING DRAWINGS BEFORE LOCATING SLEEVES AND OPENINGS IN FIRE-RATED CONSTRUCTION AND BEFORE CUTTING FIRE-RATED CONSTRUCTION.
8. WHERE "MATCH EXISTING" IS INDICATED: NEW CONSTRUCTION OF FINISHES AS APPROPRIATE TO THE NOTE, SHALL MATCH ADJACENT CONSTRUCTION AND FINISHES.
9. FIRE BLOCKING SHALL BE PROVIDED IN ALL CONCEALED SPACES, WALL CAVITIES INCLUDED, ACCORDING TO I.B.C. SECTION 708.2.1

DIRECTORY

OWNER

HUMBOLDT COUNTY

825 5TH STREET, ROOM 112
EUREKA, CA 95501
707-476-2388
CONTACT: TRAVIS SMITH
CAO PROJECT MANAGER

ARCHITECT

ALAMEIDA ARCHITECTURE
555 SOUTH MAIN STREET, SUITE 2
SEBASTOPOL, CALIFORNIA 95472
(707) 824-1219 FAX (707) 824-2670

DEFERRED APPROVAL

MODIFICATIONS TO EXISTING FIRE ALARM SYSTEM

MODIFICATIONS TO EXISTING FIRE SPRINKLER SYSTEM

DRAWING INDEX

A-0	COVER SHEET
A-0.1	CODE ANALYSIS
A-0.2	DEMOLITION PLAN
A-0.3	SITE PLAN - ACCESSIBILITY & GREEN CODE E.V.
A-0.4	ACC EGRESS PLAN
A-1	NEW FLOOR PLAN
A-1.1	LAYOUT PLAN
A-1.2	RESTROOM - DETAIL PLAN & DETAILS
A-1.3	DETAILED LOBBY AND GENDER NEUTRAL RESTROOM PLAN
A-2	R.F.C.P. DEMOLITION
A-2.2	R.F.C.P. NEW
A-3	SITE ACCESS DETAILS
A-3.1	ADA SIGNAGE PLAN
A-3.2	SIGN SCHEDULE & DETAILS
A-4	INTERIOR ELEVEATIONS
A-4.1	RECEPTION AND COUNTER SECTIONS
A-5	TYPICAL METAL STUD PARTITION CONSTRUCTION
A-6	CASEWORK DETAILS
A-7	POWER & LIGHTING CONTROLS SEQUENCE OF OPERATION
A-7.0	SUSPENDED CEILING LAYOUT AND DETAILS
A-7.1	SUSPENDED ACCOUSTICAL CEILING DETAILS
A-7.2	SUSPENDED DRYWALL LAYOUT
A-7.3	SUSPENDED DRYWALL DETAILS
A-7.4	SUSPENDED DRYWALL CEILING WHERE PARTIALLY JOISTED
A-8	ROOM SCHEDULE
A-8.1	DOOR SCHEDULE & INTERIOR OPENINGS DETAILS
CG-1	CAL GREEN CHECKLIST
CG-2	CALGREEN CHECKLIST
CG-3	CALGREN CHECKLIST
E-0	ELECTRICAL SCHEDULES AND NOTES
E-1	ELECTRICAL POWER DEMOLITION
E-2	POWER PLAN
E-3	LIGHTING PLAN
E-4	DAYLIGHTING CONTROLLED LIGHTING
M-1.1	HVAC DEMOLITION PLAN DEATAILS AND NOTES
M-2.1	HVA RCP PLAN
M-2.2	HVAC FLOOR PLAN
P-1	PLUMBING PLAN
T24-1	TITLE 24 INDOOR LIGHTING
T24-2	TITLE 24 OUTDOOR LIGHTING

PROJECT MANAGEMENT

ALAMEIDA ARCHITECTURE

CONSTRUCTION MANAGEMENT

555 S. MAIN STREET, SUITE 2
SEBASTOPOL, CA 95472
(707) 824-1219
WWW.ALAMEIDA.COM

COUNTY OF HUMBOLDT
The Home of the Redwoods

PROJECT

TENANT IMPROVENMENTS FOR ECONOMIC DEVELOPMENT AND CHILD SUPPORT SERVICES

2420 6TH STREET
EUREKA, CA

REGISTERED ARCHITECT
GONALD R. ALAMEIDA
C-19767
Exp. 11/30/23
STATE OF CALIFORNIA

No.	Description	Date
1.	PLAN CHECK COMMENTS	12/12/22

COVER SHEET

Project number	2108
Date	5/8/22
Drawn by	Author
Checked by	Checker

A-0

Scale 1" = 30'-0"

5/2/2023 4:53:46 PM

BUILDING STATISTICS	
OCCUPANCY (CBC 302)	B
USE CONSTRUCTION TYPE	BUSINESS V-A
FIRE SPRINKLERS	YES - S1
BASIC ALLOWABLE AREA (At) CBC TABLE 503	72,000 S.F.
FRONT INCREASE W=[(L1XW1)+(L2XW2)] / F	NONE TAKEN
FRONT INCREASE If=[F/P-0.25] W/30	NONE TAKEN
FRONT INCREASE At X If	NONE TAKEN
SPRINKLER INCREASE At X Is	NONE TAKEN
ALOWABLE AREA Aa = [At + (At X If) + (At X Is)]	Aa = 9,000 + 6,525+0 Aa = 15,525 S.F.
TOTAL ACTUAL PER STORY	72,000 S.F.
	TOTAL ACTUAL BUILDING AREA = 19,964
ALLOWABE HEIGHT (FEET) (CBC TABLE 503)	70
ACTUAL HEIGHT (FEET)	+/- 30 '
ALLOWABLE STORIES	4
ACTUAL STORIES	1

REQUIRED PLUMBING FIXTURE COUNT

TABLE 422.1
MINIMUM PLUMBING FACILITIES[1] (continued)

TYPE OF OCCUPANCY[2]	WATER CLOSETS (FIXTURES PER PERSON)[3]		URINALS (FIXTURES PER PERSON)[4]	LAVATORIES (FIXTURES PER PERSON)[5, 6]		BATHTUBS OR SHOWERS (FIXTURES PER PERSON)	DRINKING FOUNTAINS/ FACILITIES (FIXTURES PER PERSON)	OTHER
B Business occupancy (office, professional or service type transactions)-banks, vet clinics, hospitals, car wash, banks, beauty salons, ambulatory health care facilities, laundries and dry cleaning, educational institutions (above high school), or training facilities not located within school, post offices and printing shops	Male 1: 1-50 2: 51-100 3: 101-200 4: 201-400	Female 1: 1-15 2: 16-30 3: 31-50 4: 51-100 8: 101-200 11: 201-400	Male 1: 1-100 2: 101-200 3: 201-400 4: 401-600	Male 1: 1-75 2: 76-150 3: 151-200 4: 201-300 5: 301-400	Female 1: 1-50 2: 51-100 3: 101-150 4: 151-200 5: 201-300 6: 301-400	—	1 per 150	1 service sink or laundry tray
	Over 400, add 1 fixture for each additional 500 males and 1 fixture for each additional 150 females.		Over 600, add 1 fixture for each additional 300 males.	Over 400, add 1 fixture for each additional 250 males and 1 fixture for each additional 200 females.				

REQUIRED PLUMBING FIXTURE COUNT FOR TOTAL OCCUPANT LOAD OF 239
50 / 50 MALE AND FEMALE = 120 EACH.

	MALE	FEMALE
WATER CLOSETS	3 REQUIRED	8 REQUIRED
	2 MALE ONLY 1 UNISEX 3 PROVIDED	7 FEMALE ONLY 1 UNISEX 8 PROVIDED
URINALS	2 REQUIRED 2 PROVIDED	
LAVATORIES	3 REQUIRED 2 MALE ONLY 1 UNISEX 3 PROVIDED	2 REQUIRED 5 FEMALE ONLY 1 UNISEX 6 PROVIDED
DRINKING FOUNTAIN	1 PER 150 = 2 REQUIRED 3 PROVIDED	

SEE SHEET A-0.4 ACC EGRERSS PLAN

OCCUPANCY LOAD SCHEDULE

RM. NO.	NAME	AREA	OCCUPANCY	OLF	NO. OF OCCUPANTS	# OF EXITS	CUMM. LOAD	EGRESS WIDTH (IN.)	MIN. EGRESS WIDTH (IN.) PER C.B.C. 1005.3.2 & 11B-404.2.3
101	EXHIBIT / LOBBY	608 SF	EXHIBIT GALLERY	30	20	1		72	32
102	ECD CONF. 1	216 SF	BUSINESS	100	2	1		36	32
103	ECD OFFICE 1	154 SF	BUSINESS	100	2	1		36	32
104	BREAK OUT 1	121 SF	BUSINESS	100	1	1		36	32
105	COPY 1	114 SF	BUSINESS	100	1	1		36	32
106	EC DEV OPEN OFFICE	1179 SF	BUSINESS	100	12	2		72	32
106A	RECEPT.	107 SF	BUSINESS	100	1	1		36	32
106B	CAFE HALL	140 SF	BUSINESS	100	1	1		36	32
107	ECD OFFICE 2	167 SF	BUSINESS	100	2	1		36	32
108	OFFICE	159 SF	BUSINESS	100	2	1		36	32
109	STORAGE	93 SF	ACC. STOR.	300	0	1		36	32
110	OFFICE	165 SF	BUSINESS	100	2	1		36	32
111	BREAKOUT 2	182 SF	BUSINESS	100	2	1		36	32
112	EXHIB. STOR.	55 SF	ACC. STOR.	300	0	1		36	32
113	W.C.	53 SF	BUSINESS	100	1	1		36	32
120	VILLAGE	2326 SF	BUSINESS	100	23	3		36	32
121	COLLABORATION	351 SF	BUSINESS	100	4	1		36	32
122	OFFICE	166 SF	BUSINESS	100	2	1		36	32
123	OFFICE	232 SF	BUSINESS	100	2	1		36	32
124	OFFICE	180 SF	BUSINESS	100	2	1		36	32
124	CUST.	35 SF	ACC. STOR.	300	0	1		36	32
127	OFFICE	161 SF	BUSINESS	100	2	1		36	32
128	OFFICE	161 SF	BUSINESS	100	2	1		36	32
129	OFFICE	151 SF	BUSINESS	100	2	1		36	32
130	OFFICE	169 SF	BUSINESS	100	2	1		36	32
131	CONFERENCE	989 SF	ASSEM NON FIXED SEATS	15	66	2		72	32
132	OFFICE	132 SF	BUSINESS	100	1	1		36	32
133	STORAGE	296 SF	ACC. STOR.	300	1	1		36	32
134	OFFICE	132 SF	BUSINESS	100	1	1		36	32
135	OPEN OFFICE	1225 SF	BUSINESS	100	12	2		72	32
136	OFFICE	169 SF	BUSINESS	100	2	1		36	32
137	OFFICE	191 SF	BUSINESS	100	2	1		36	32
138	OFFICE	159 SF	BUSINESS	100	2	1		36	32
139	OFFICE	159 SF	BUSINESS	100	2	1		36	32
140	RECEPT.	301 SF	BUSINESS	100	3	1		36	32
141	OFFICE	157 SF	BUSINESS	100	2	1		36	32
142	OFFICE	79 SF	BUSINESS	100	1	1		36	32
143	CORRIDOR	290 SF		0		2		72	
144	OFFICE	145 SF	BUSINESS	100	1				32
145	OFFICE	134 SF	BUSINESS	100	1				32
146	OFFICE	142 SF	BUSINESS	100	1				32
147	OFFICE	1354 SF	BUSINESS	100	14	1		36	32
148	STOR.	52 SF	ACC. STOR.	300	0	1		36	32
160	BREAK RM.	589 SF	BUSINESS	100	6	1		36	32
161	CONFER. 1	358 SF	BUSINESS	100	4	1		36	32
162	CONF. STOR,	53 SF	ACC. STOR.	300	0	1		36	32
164	MENS	205 SF	BUSINESS	100	2	1		36	32
165	WOMENS	324 SF	BUSINESS	100	3	1		36	32
166	LOUNGE	106 SF	BUSINESS	100	1	1		36	32
170	INFOR. SERVICES	444 SF	BUSINESS	100	4	1		36	32
171	SYST. ANYLSIS	165 SF	BUSINESS	100	2	1		36	32
172	TEL. RM	83 SF	ACC. STOR.	100	1	1		36	32
173	SERVER	128 SF	ACC. STOR.	100	1	1		36	32
174	EQ. STOR	118 SF	ACC. STOR.	100	1	1		36	32
180	CORRIDOR	616 SF		0		2	80	36	32
181	CORRIDOR	346 SF		0		2	88	36	32
190	COPY/STOR.	157 SF	BUSINESS	100	2	1		36	32
191	OFFICE	201 SF	BUSINESS	100	2	1		36	32
192	OFFICE	209 SF	BUSINESS	100	2	1		36	32
194	HALL	391 SF	BUSINESS	100	4	1		36	32
195	INTERVIEW 1	126 SF	BUSINESS	100	1	1		36	32
196	INTERVIEW 2	126 SF	BUSINESS	100	1	1		36	32
197	CSS LOBBY	179 SF	BUSINESS	100	2	1		36	32
198	CSS CONFER.	170 SF	BUSINESS	100	2	1		36	32
199A	CSS RECEP.	93 SF	BUSINESS	100	1	1		36	32
		18740 SF			239 OCCUPANTS				

PROJECT MANAGEMENT
ALAMEIDA ARCHITECTURE
CONSTRUCTION MANAGEMENT
555 S. MAIN STREET, SUITE 2
SEBASTOPOL, CA 95472
(707) 824-1219
WWW.ALAMEIDA.COM

PROJECT

TENANT IMPROVENMENTS FOR ECONOMIC DEVELOPMENT AND CHILD SUPPORT SERVICES

2420 6TH STREET
EUREKA, CA

REGISTERED ARCHITECT
DONALD R ALAMEIDA
C-19767
Exp. 11/30/23
STATE OF CALIFORNIA

No.	Description	Date
1.	PLAN CHECK COMMENTS	12/12/22

CODE ANALYSIS

Project number	2108
Date	5/8/22
Drawn by	Author
Checked by	Checker

A-0.1

Scale

5/2/2023 4:53:48 PM

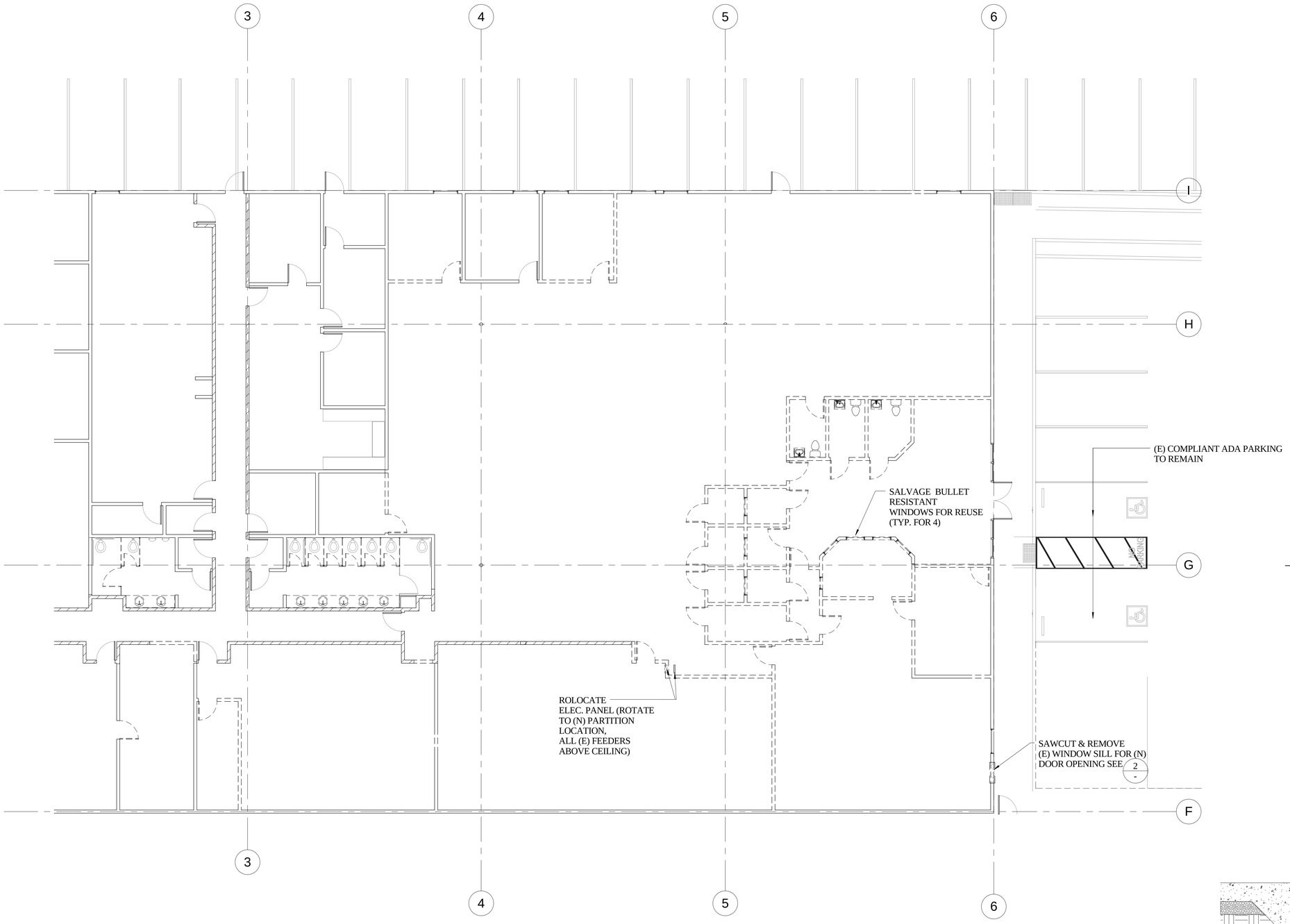

1 A-0.2 FIRST FLOOR DEMOLITION
1/8" = 1'-0"

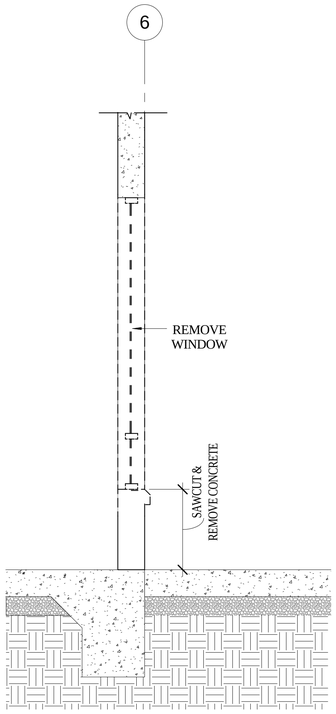

2 A-0.2 SAWCUT DOOR SECTION
3/4" = 1'-0"

PROJECT MANAGEMENT

ALAMEIDA
ARCHITECTURE

CONSTRUCTION MANAGEMENT

555 S. MAIN STREET, SUITE 2
SEBASTOPOL, CA 95472
(707) 824-1219
WWW.ALAMEIDA.COM

COUNTY OF HUMBOLDT
The Home of the Redwoods

PROJECT

TENANT IMPROVEMENTS FOR ECONOMIC DEVELOPMENT AND CHILD SUPPORT SERVICES

2420 6TH STREET
EUREKA, CA

REGISTERED ARCHITECT
GONALD R. ALAMEIDA
C-19767
Exp. 11/30/23
STATE OF CALIFORNIA

No.	Description	Date
1.	PLAN CHECK COMMENTS	12/12/22

DEMOLITION PLAN

Project number	2108
Date	5/8/22
Drawn by	Author
Checked by	Checker

A-0.2

Scale As indicated

5/2/2023 4:53:53 PM

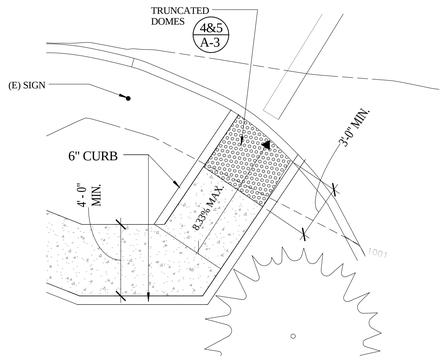

5 A-0.3 CURB CUT DETAIL
1/4" = 1'-0"

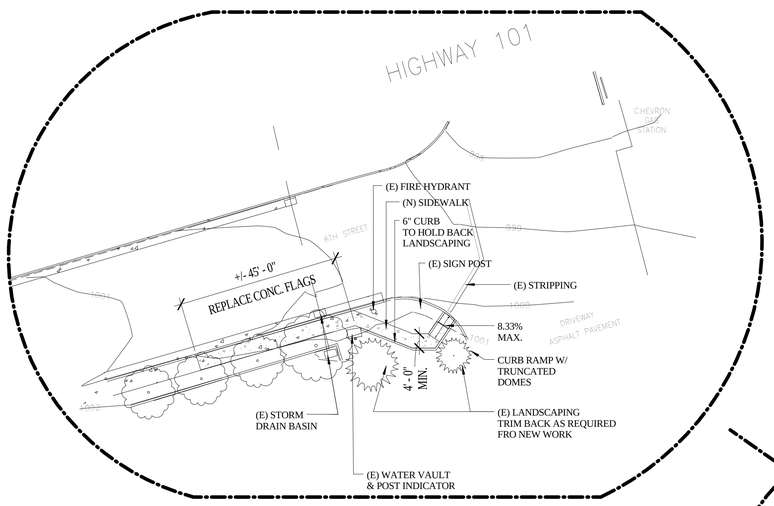

4 A-0.3 (N) CURB CUT AT 6TH STREET
1" = 20'-0"

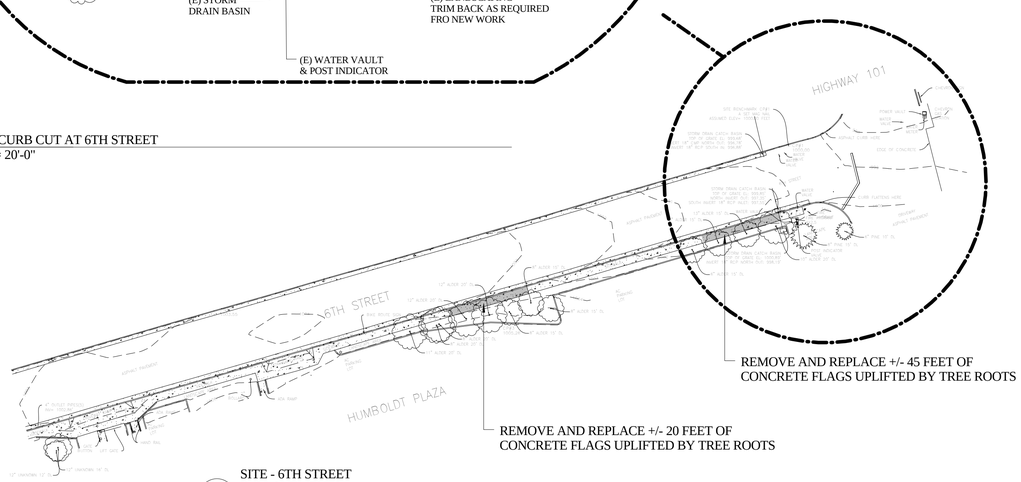

3 A-0.3 SITE - 6TH STREET IMPROVEMENTS
1" = 40'-0"

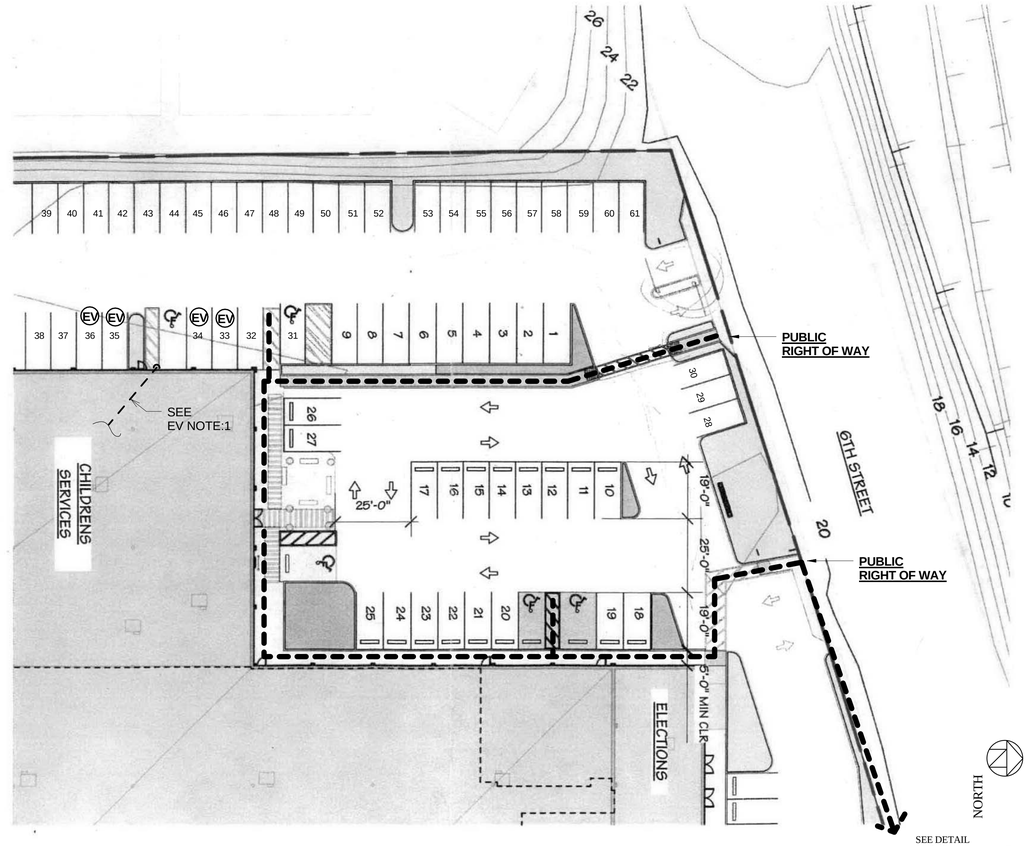

EV E.V. READY PARKING SPACE

PARKING FOR CHILD PROTECTIVE SERVICES, ECONOMIC DEVELOPMENT AND DEPARTMENT OF ELECTIONS

EXISTING PARKLING
STANDARD STALL = 60
ACCESSIBLE VAN = 2
ACCESSIBALE = 2
TOTAL 64

REQUIRED ACCESSIBLE PARKING FOR 51- 75
3 REQUIRED < 4 PROVIDED

E.V.NOTE 1.

INSTALL 2" CONDUIT FROM DISTRIBUTION PANEL "W" 800 AMP SERVICE LOCATED IN ROOM 166 ABOVE CEILING, TROUGH EXTERIOR WALL AND TEMINATE FOR FUTURE E.V. SUBPANEL & CHARGERS @ 42" ABOVE GRADE ON EXTERIOR WALL.

C.B.C. GREEN CODE ELECTRIC VEHICAL READY REQUIREMENT

TABLE 5.106.5.3.3

TOTAL NUMBER OF ACTUAL PARKING SPACES	NUMBER OF REQUIRED EV CHARGING SPACES
0-9	0
10-25	1
26-50	2
51-75	4
76-100	5
101-150	7
151-200	10
201 and over	6 percent of total[1]

1. Calculation for spaces shall be rounded up to the nearest whole number.

1 A-0.3 SITE PLAN - ACCESSIBILITY
1/2" = 1'-0"

& GREEN CODE E.V. PARKING

PROJECT MANAGEMENT

ALAMEIDA ARCHITECTURE

CONSTRUCTION MANAGEMENT

555 S. MAIN STREET, SUITE 2
SEBASTOPOL, CA 95472
(707) 824-1219
WWW.ALAMEIDA.COM

COUNTY OF HUMBOLDT — The Home of the Redwoods

PROJECT

TENANT IMPROVEMENTS FOR ECONOMIC DEVELOPMENT AND CHILD SUPPORT SERVICES

2420 6TH STREET
EUREKA, CA

REGISTERED ARCHITECT DONALD R. ALAMEIDA C-19767 Exp. 11/30/23 STATE OF CALIFORNIA

No.	Description	Date
1.	PLAN CHECK COMMENTS	12/12/22

SITE PLAN - ACCESSIBILITY

Project number	2108
Date	5/8/22
Drawn by	Author
Checked by	Checker

A-0.3

Scale As indicated

5/3/2023 8:58:44 AM

SHEET NOTE

AC-1 ALL EGRESS ROUTES TO MEET ADA MANEUVERING CLEARANCES FOR ALL NEW ROOMS/SPACES.

AC-2 EXISTING ADA PARKING

AC-3 SEE SHEET A1.2 FOR MODIFICATIONS TO EXITING RESTROOMS

AC-4 AT LEAST 5% OF SEATING SPACE AND STANDING SPACES AT DINNING SURFACE SHALL COMPLY WITH SECTION 11B-902. WHERE WORK SURFACES ARE PROVIDED FOR USE BY OTHER THAN EMPLOYEES, AT LEAST 5% SHALL COMPLY WITH SECTION 11B-902.

NOTE: ACCESSIBLE FURNITURE TO COMPLY WITH 11B-902.2 AND 11B-902.3.

AC-5 FURNITURE PLACEMENT NOT T0 OBSTRUCT THE REQUIRED DOOR MANEUVERING SPACE OR REDUCE THE REQUIRED WIDTH OF ACCESSIBLE ROUTE.

F-E VERIFY (E) AND (N) FIRE EXTINGUISHER TO BE NO FURTHER THAN 75 FOOT TRAVEL DISTANCE

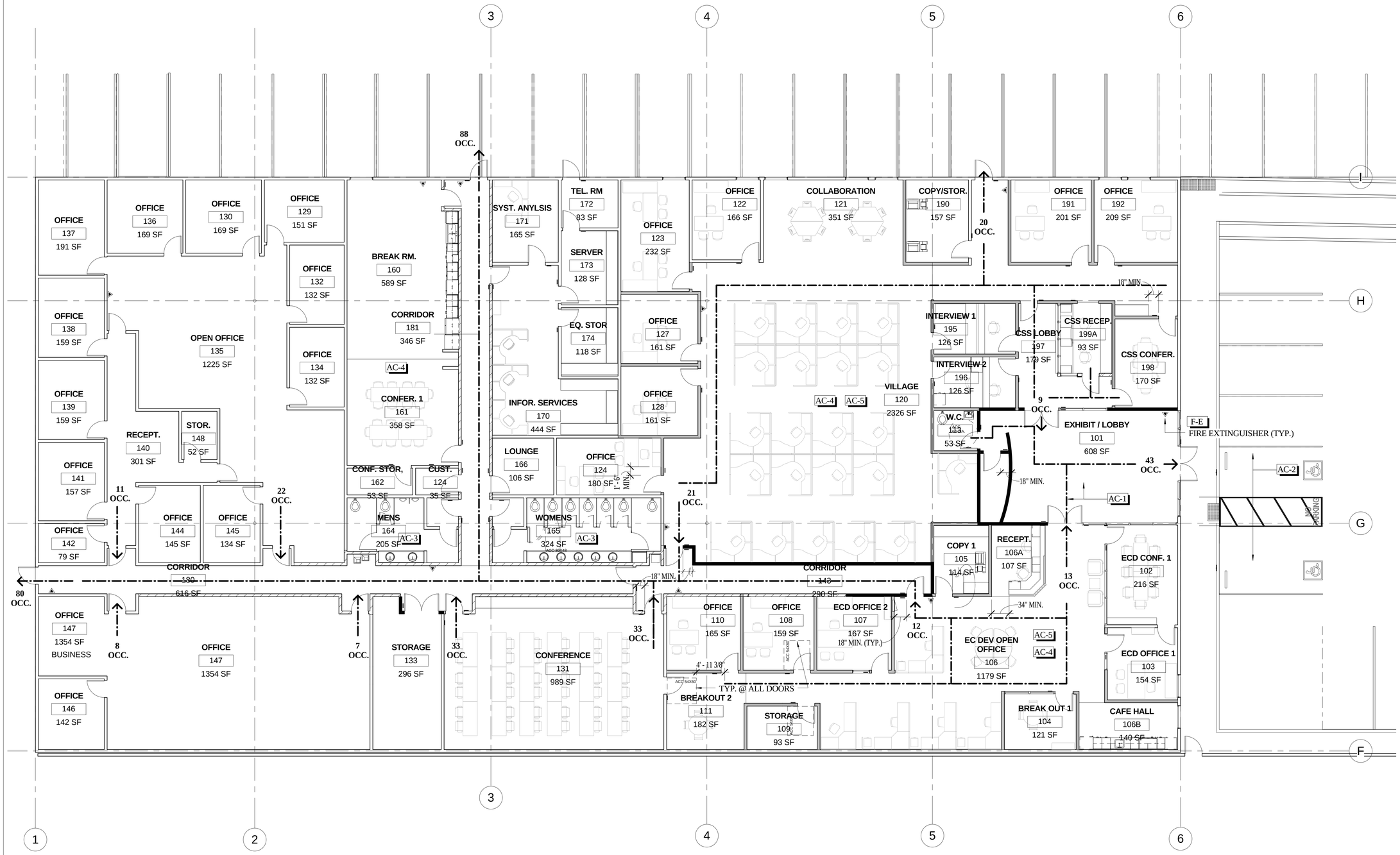

1 / A-0.4 FIRST FLOOR EXITING PLAN
1/8" = 1'-0"

PROJECT MANAGEMENT

ALAMEIDA ARCHITECTURE

CONSTRUCTION MANAGEMENT

555 S. MAIN STREET, SUITE 2
SEBASTOPOL, CA 95472
(707) 824-1219
WWW.ALAMEIDA.COM

COUNTY OF HUMBOLDT
The Home of the Redwoods

PROJECT

TENANT IMPROVEMENTS FOR ECONOMIC DEVELOPMENT AND CHILD SUPPORT SERVICES

2420 6TH STREET
EUREKA, CA

REGISTERED ARCHITECT
DONALD R. ALAMEIDA
C-19767
Exp. 11/30/23
STATE OF CALIFORNIA

No.	Description	Date
1.	PLAN CHECK COMMENTS	12/12/22

ACC EGRESS PLAN

Project number	2108
Date	5/8/22
Drawn by	Author
Checked by	Checker

A-0.4

Scale 1/8" = 1'-0"

5/2/2023 4:54:01 PM

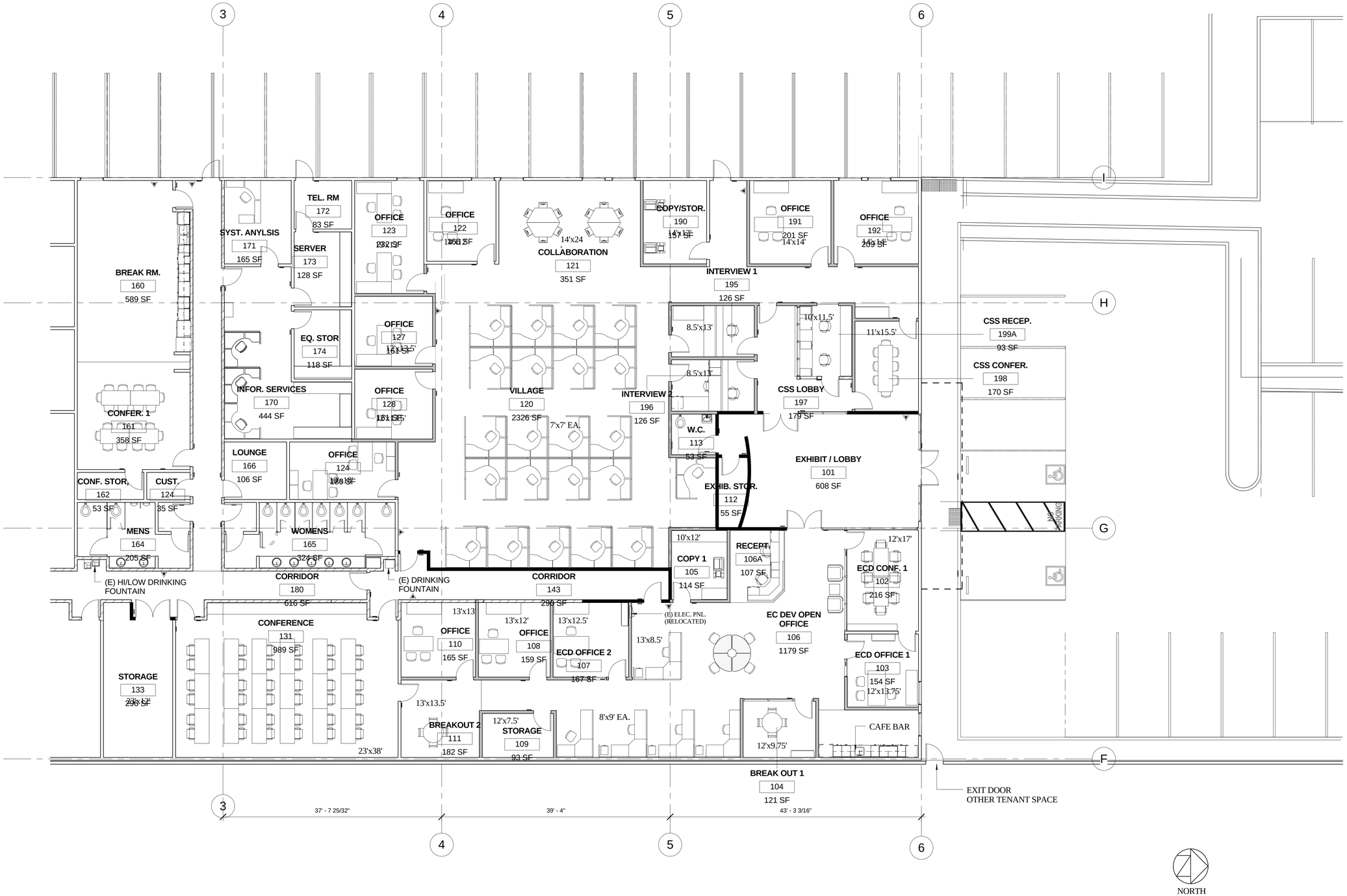

1 / A-1 FIRST FLOOR IMPROVEMENT PLAN
1/8" = 1'-0"

PROJECT MANAGEMENT

ALAMEIDA ARCHITECTURE

CONSTRUCTION MANAGEMENT

555 S. MAIN STREET, SUITE 2
SEBASTOPOL, CA 95472
(707) 824-1219
WWW.ALAMEIDA.COM

COUNTY OF HUMBOLDT
The Home of the Redwoods

PROJECT

TENANT IMPROVEMENTS FOR ECONOMIC DEVELOPMENT AND CHILD SUPPORT SERVICES

2420 6TH STREET
EUREKA, CA

REGISTERED ARCHITECT
DONALD R. ALAMEIDA
C-19767
Exp. 1/1/2023
STATE OF CALIFORNIA

No.	Description	Date
1.	PLAN CHECK COMMENTS	12/12/22

NEW FLOOR PLAN

Project number	2108
Date	5/8/22
Drawn by	DRA
Checked by	DRA

A-1

Scale 1/8" = 1'-0"

5/2/2023 4:54:06 PM

WALL / PARTITION TYPES

EXITING PARTITION

NEW PARTITION (X / X-X)

NEW 1 HOUR RATED PARTITION (X / X-X)

NEW BULLET RESISANT PARTITION (X / X-X)

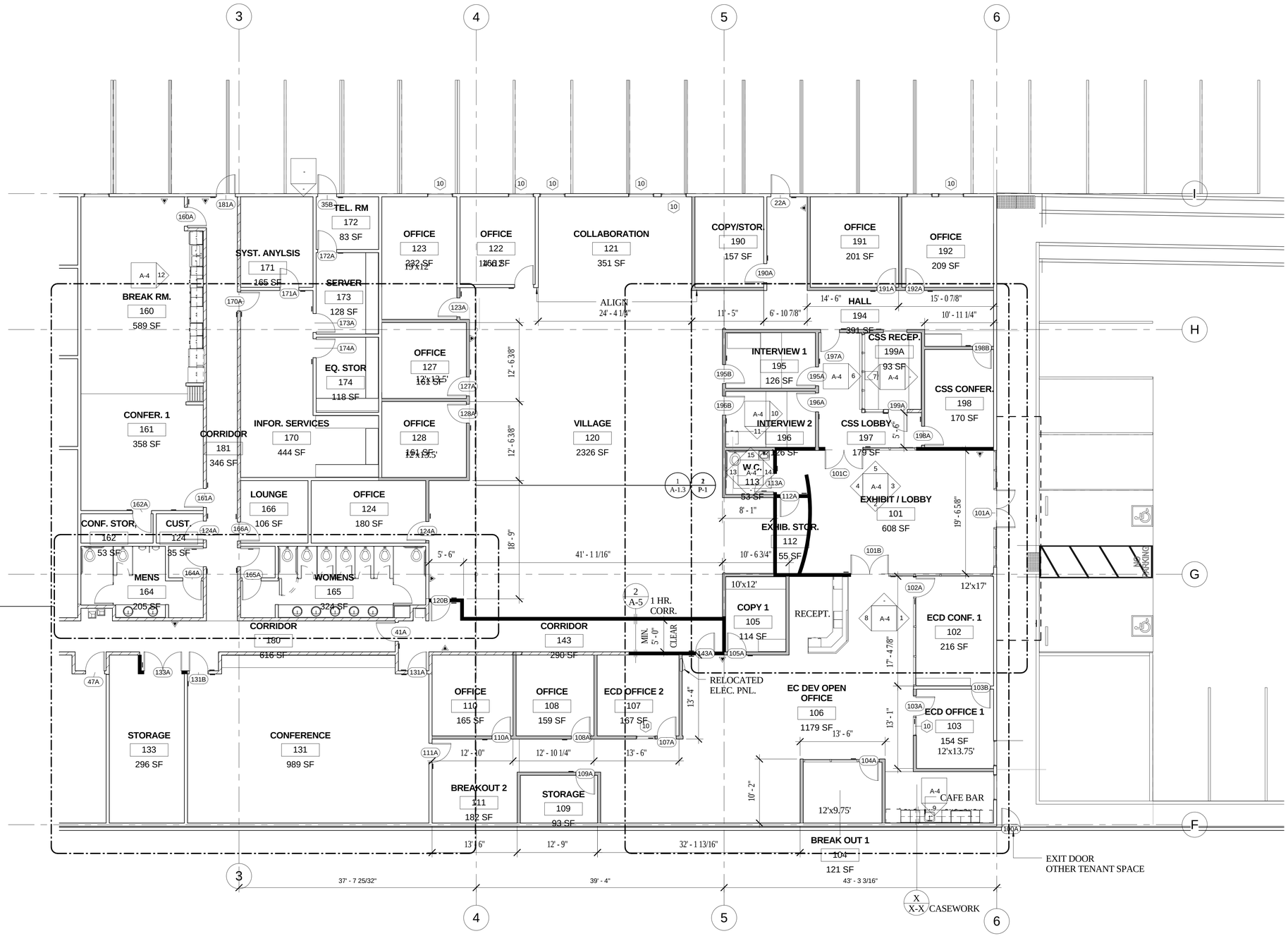

1 A-1.1 FIRST FLOOR LAYOUT PLAN
1/8" = 1'-0"

PROJECT MANAGEMENT

ALAMEIDA ARCHITECTURE

CONSTRUCTION MANAGEMENT

555 S. MAIN STREET, SUITE 2
SEBASTOPOL, CA 95472
(707) 824-1219
WWW.ALAMEIDA.COM

COUNTY OF HUMBOLDT
The Home of the Redwoods

PROJECT

TENANT IMPROVEMENTS FOR ECONOMIC DEVELOPMENT AND CHILD SUPPORT SERVICES

2420 6TH STREET
EUREKA, CA

REGISTERED ARCHITECT
DONALD R. ALAMEIDA
C-19767
Exp. 1/30/23
STATE OF CALIFORNIA

No.	Description	Date
1.	PLAN CHECK COMMENTS	12/12/22

LAYOUT PLAN

Project number	2108
Date	5/8/22
Drawn by	Author
Checked by	Checker

A-1.1

Scale 1/8" = 1'-0"

5/3/2023 9:00:38 AM

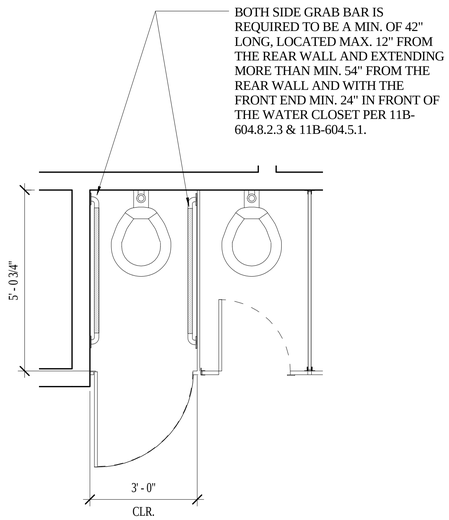

7 A-1.2 SEMIAMBULATORY STALL
1/2" = 1'-0"

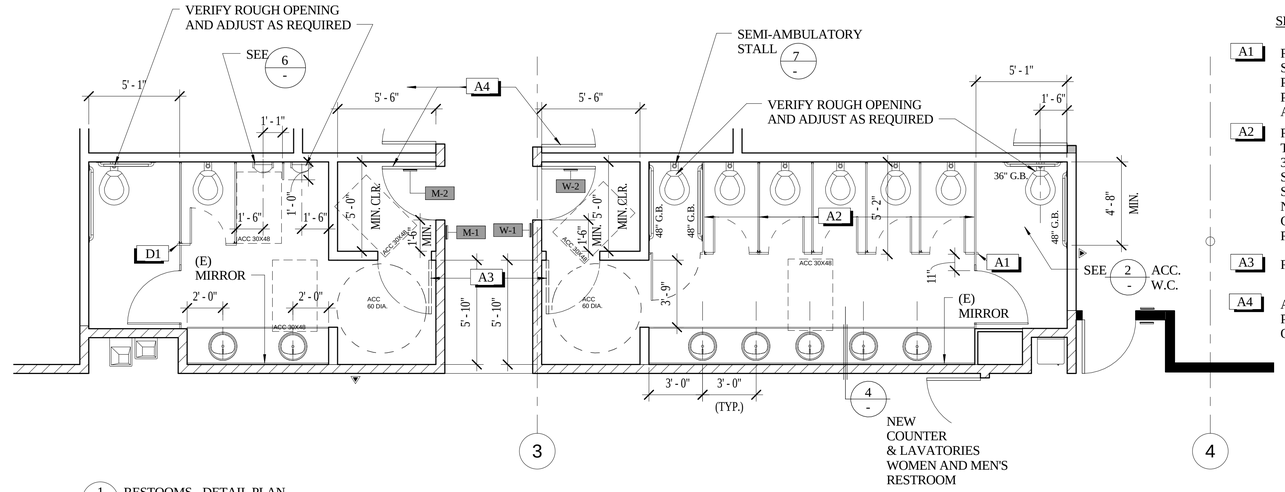

1 A-1.2 RESTOOMS - DETAIL PLAN
1/4" = 1'-0"

SHEET NOTE

A1 RELOCATE PARTITION SO PERPENDICULAR PARTITION DOES NOT PROJECT INTO CLEAR AREA

A2 RELOCATE PARTITIONS TO PROVIDE FOR MIN. 3'-0" CLEAR @ NEW SEMIAMBULATORY STALL. MIN SIZE FOR NON ACC STALL 2'-10". GROUT HOLES AS REQUIRED

A3 REMOVE DOORS

A4 ADJUST DOOR CLOSER PRESSDURE TO 5LBS OR LESS

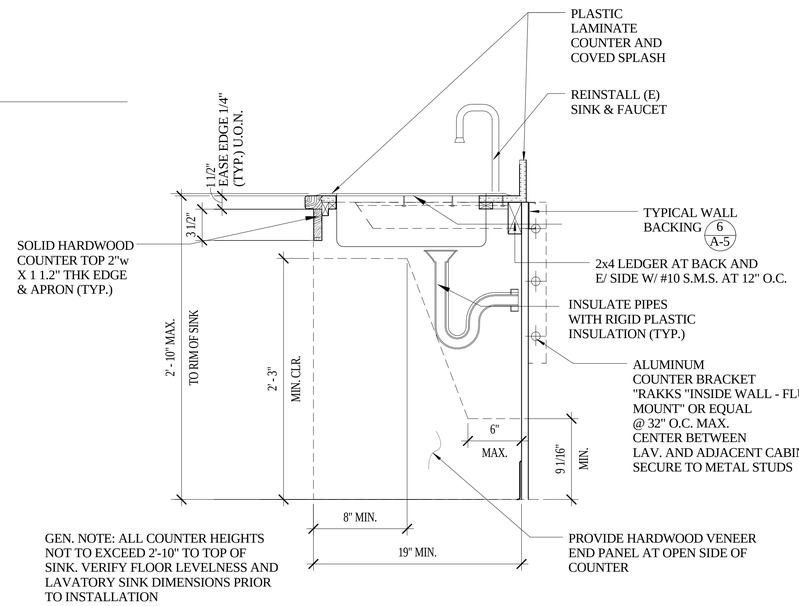

GEN. NOTE: ALL COUNTER HEIGHTS NOT TO EXCEED 2'-10" TO TOP OF SINK. VERIFY FLOOR LEVELNESS AND LAVATORY SINK DIMENSIONS PRIOR TO INSTALLATION

4 A-1.2 COUNTER W/ SINK
1 1/2" = 1'-0"

FLUSH CONTROL - NO GREATER THAN 5 LBS.OF FORCE TO OPERATE

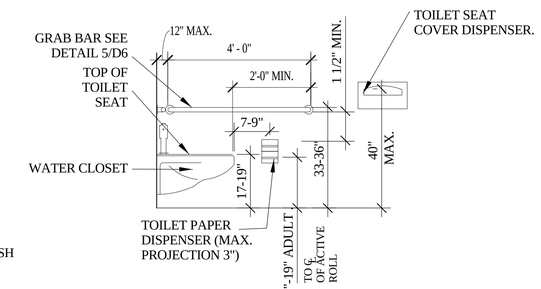

NOTE:
FLUSH VALVE SHALL BE ON THE WIDE SIDE.

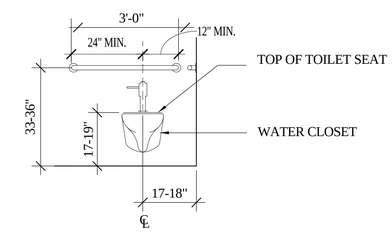

NOTE: ALL DIMENSIONS INDICATED ARE CLEAR, FINISH TO CENTER LINES OF PLUMBING FIXTURES OR ACCESSORIES DIMENSIONS AND FOR ADULT HEIGHT FIXTURES

2 A-1.2 ACCESSIBLE WATERCLOSET HEIGHTS
1/2" = 1'-0"

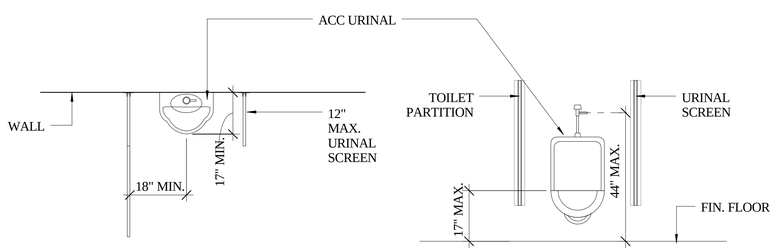

6 A-1.2 ACC URINAL
1/2" = 1'-0"

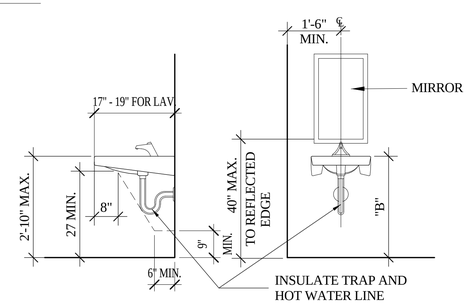

NOTE: ALL DIMENSIONS INDICATED ARE CLEAR, FINISH TO FINISH DIMENSIONS AND MUST BE STRICTLY MAINTAINED

5 A-1.2 ACC LAVATORY HEIGHTS
1/2" = 1'-0"

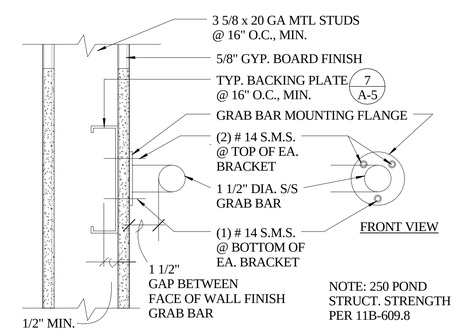

NOTE: 250 POND STRUCT. STRENGTH PER 11B-609.8

3 A-1.2 GRAB BAR ATTACHMENT
3" = 1'-0"

PROJECT MANAGEMENT
ALAMEIDA ARCHITECTURE
CONSTRUCTION MANAGEMENT
555 S. MAIN STREET, SUITE 2
SEBASTOPOL, CA 95472
(707) 824-1219
WWW.ALAMEIDA.COM

COUNTY OF HUMBOLDT
The Home of the Redwoods

PROJECT

TENANT IMPROVEMENTS FOR ECONOMIC DEVELOPMENT AND CHILD SUPPORT SERVICES

2420 6TH STREET
EUREKA, CA

REGISTERED ARCHITECT
DONALD R ALAMEIDA
C-19767
Exp. 11/30/23
STATE OF CALIFORNIA

No.	Description	Date
1.	PLAN CHECK COMMENTS	12/12/22

RESTROOM - DETAIL PLAN & DETAILS

Project number	2108
Date	5/8/22
Drawn by	Author
Checked by	Checker

A-1.2

Scale As indicated

5/2/2023 4:54:15 PM

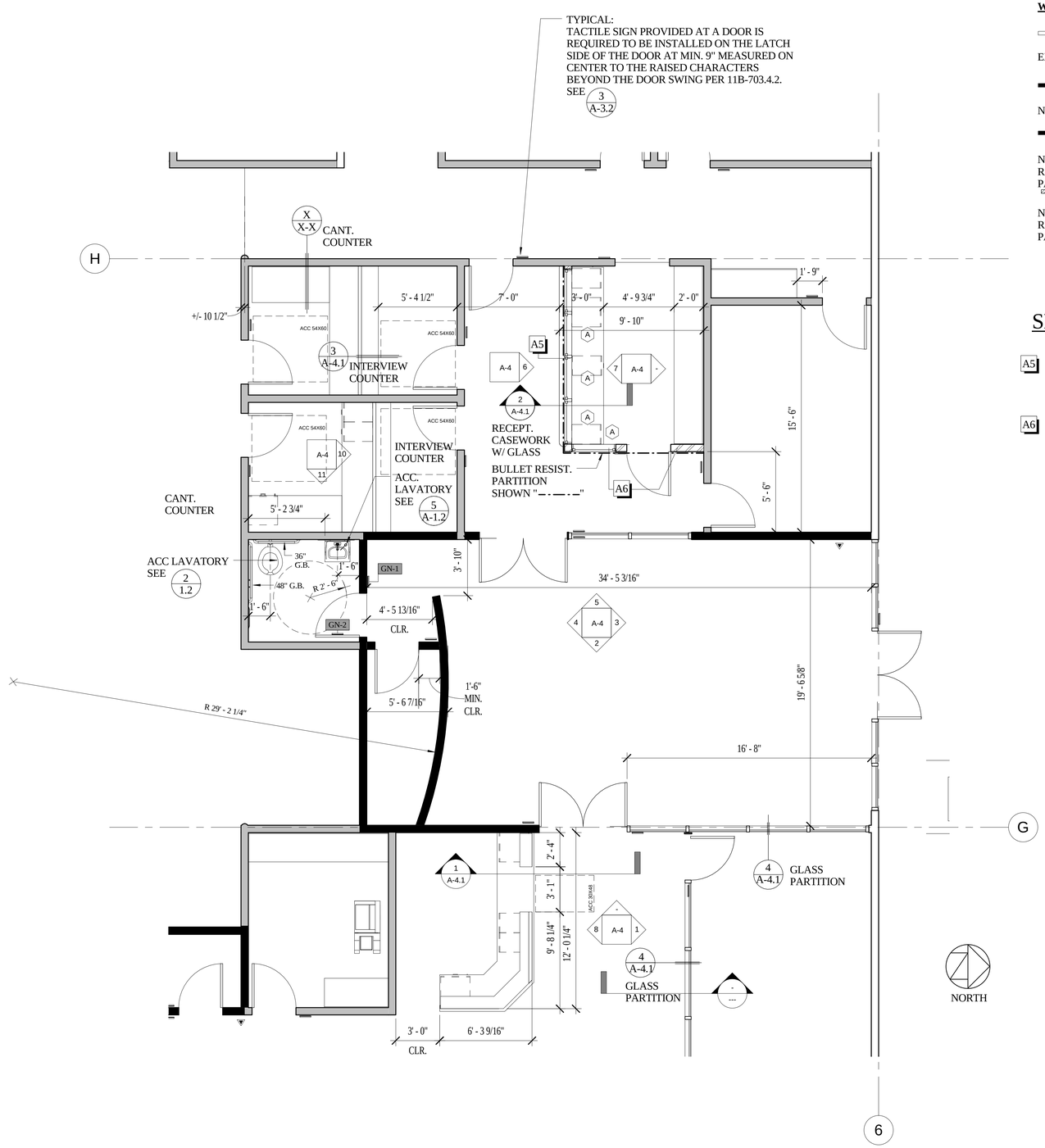

1 A-1.3 LOBBIES & GENDER NEUTRAL W.C. - PLAN
1/4" = 1'-0"

WALL / PARTITION TYPES

EXITING PARTITION

NEW PARTITION (X / X-X)

NEW 1 HOUR RATED PARTITION (X / X-X)

NEW BULLET RESISANT PARTITION (X / X-X)

SHEET NOTES

A5 INSTALL SALVAGED BULLET RESISTANT WINDOWS (TYP. FOR 4)

A6 DRYWALL W/ BULLET RESISTANT LINER

PROJECT MANAGEMENT

ALAMEIDA ARCHITECTURE

CONSTRUCTION MANAGEMENT

555 S. MAIN STREET, SUITE 2
SEBASTOPOL, CA 95472
(707) 824-1219
WWW.ALAMEIDA.COM

PROJECT

TENANT IMPROVEMENTS FOR ECONOMIC DEVELOPMENT AND CHILD SUPPORT SERVICES

2420 6TH STREET
EUREKA, CA

REGISTERED ARCHITECT DONALD R. ALAMEIDA C-19767 Exp. 11/30/23 STATE OF CALIFORNIA

No.	Description	Date
1.	PLAN CHECK COMMENTS	12/12/22

DETAILED LOBBY AND GENDER NEUTRAL RESTROOM PLAN

Project number	2108
Date	5/8/22
Drawn by	Author
Checked by	Checker

A-1.3

Scale As indicated

5/2/2023 4:54:17 PM

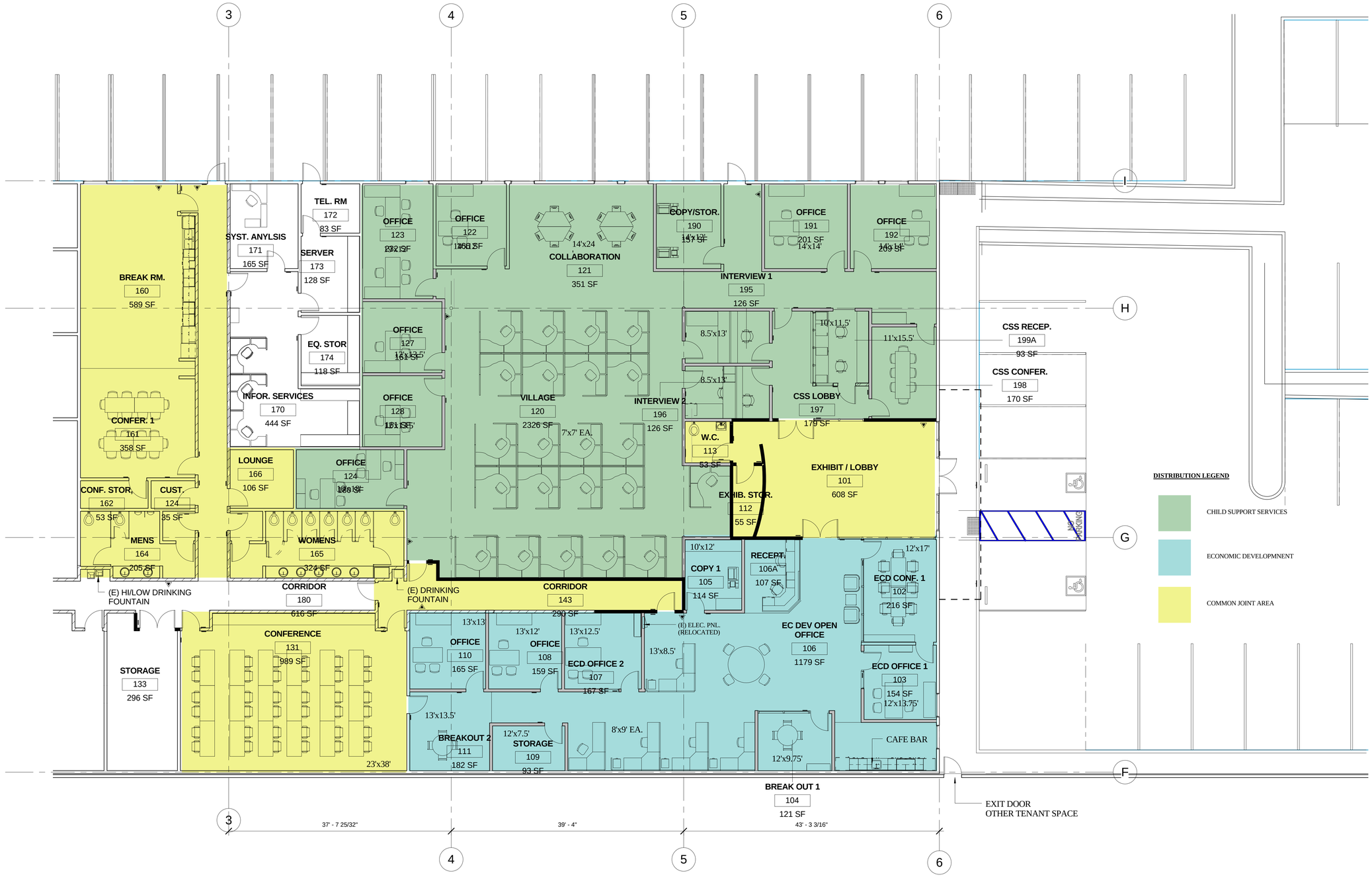

1 A-1.4 FIRST FLOOR - DEPARTMENT DISTRIBUTION
1/8" = 1'-0"

PROJECT MANAGEMENT

ALAMEIDA ARCHITECTURE

CONSTRUCTION MANAGEMENT

555 S. MAIN STREET, SUITE 2
SEBASTOPOL, CA 95472
(707) 824-1219
WWW.ALAMEIDA.COM

PROJECT

TENANT IMPROVEMENTS FOR ECONOMIC DEVELOPMENT AND CHILD SUPPORT SERVICES

2420 6TH STREET
EUREKA, CA

REGISTERED ARCHITECT
RONALD R. ALAMEIDA
C-19767
Exp. 11/30/23
STATE OF CALIFORNIA

No.	Description	Date
1.	PLAN CHECK COMMENTS	12/12/22

DEPARTMENTAL DISTRIBUTION PLAN

Project number	2108
Date	5/8/22
Drawn by	Author
Checked by	Checker

A-1.4

Scale 1/8" = 1'-0"

7/10/2023 7:44:22 AM

1 / A-2 CEILING DEMOLITION
1/8" = 1'-0"

PROJECT MANAGEMENT

ALAMEIDA ARCHITECTURE

CONSTRUCTION MANAGEMENT

555 S. MAIN STREET, SUITE 2
SEBASTOPOL, CA 95472
(707) 824-1219
WWW.ALAMEIDA.COM

PROJECT

TENANT IMPROVEMENTS FOR ECONOMIC DEVELOPMENT AND CHILD SUPPORT SERVICES

2420 6TH STREET
EUREKA, CA

REGISTERED ARCHITECT
DONALD R. ALAMEIDA
C-19767
Exp. 11/30/23
STATE OF CALIFORNIA

No.	Description	Date
1.	PLAN CHECK COMMENTS	12/12/22

R.F.C.P. DEMOLITION

Project number	2108
Date	5/8/22
Drawn by	Author
Checked by	Checker

A-2

Scale 1/8" = 1'-0"

5/2/2023 4:54:21 PM

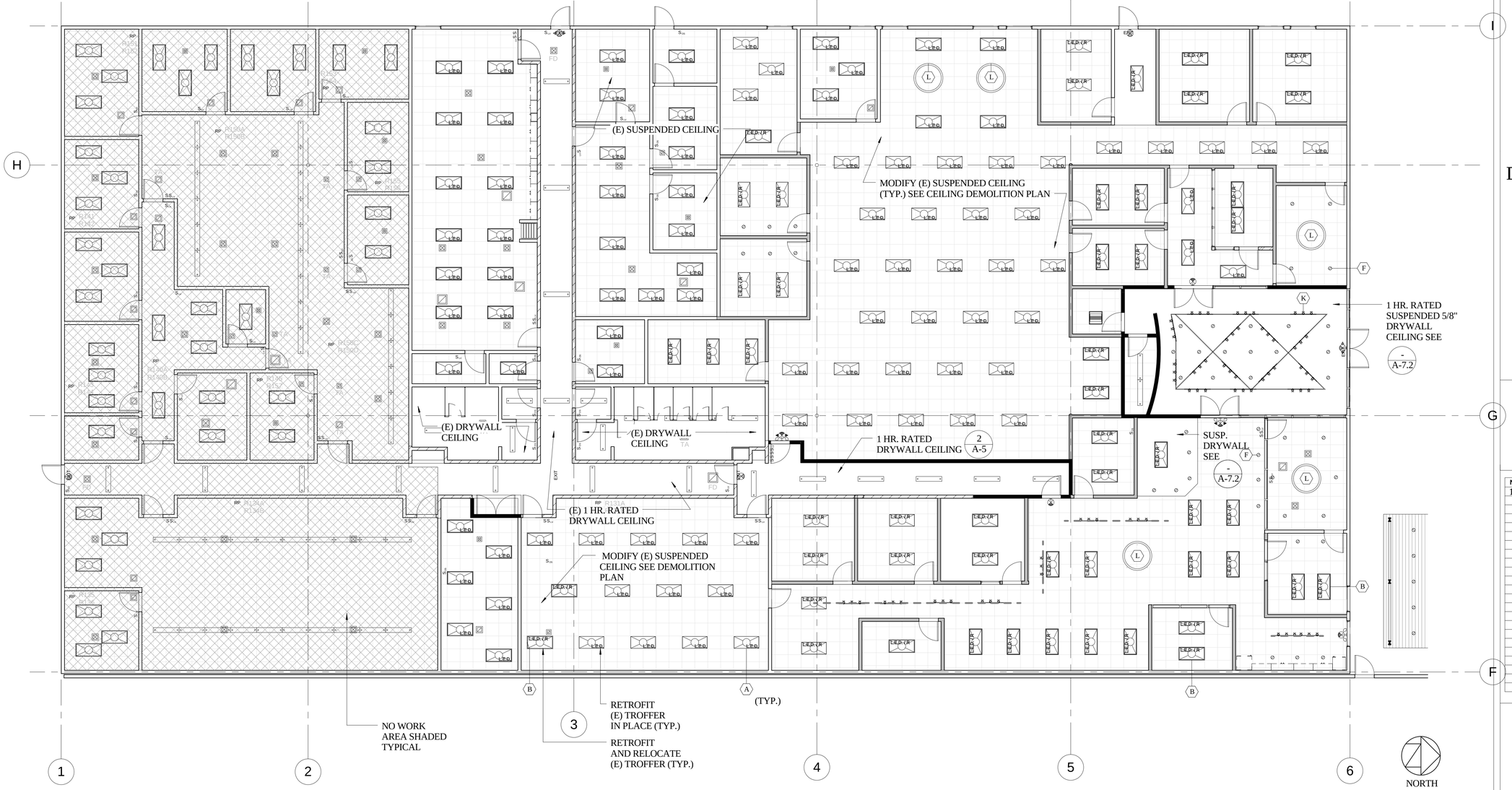

1 A-2.2 REFLECTED CEILING PLAN
1/8" = 1'-0"

PROJECT MANAGEMENT

ALAMEIDA ARCHITECTURE

CONSTRUCTION MANAGEMENT

555 S. MAIN STREET, SUITE 2
SEBASTOPOL, CA 95472
(707) 824-1219
WWW.ALAMEIDA.COM

PROJECT

TENANT IMPROVEMENTS FOR ECONOMIC DEVELOPMENT AND CHILD SUPPORT SERVICES

2420 6TH STREET
EUREKA, CA

REGISTERED ARCHITECT
DONALD R. ALAMEIDA
C-19767
Exp. 11/30/23
STATE OF CALIFORNIA

No.	Description	Date
1.	PLAN CHECK COMMENTS	12/12/22

R.F.C.P. NEW

Project number	2108
Date	5/8/22
Drawn by	Author
Checked by	Checker

A-2.2

Scale 1/8" = 1'-0"

5/2/2023 4:54:26 PM

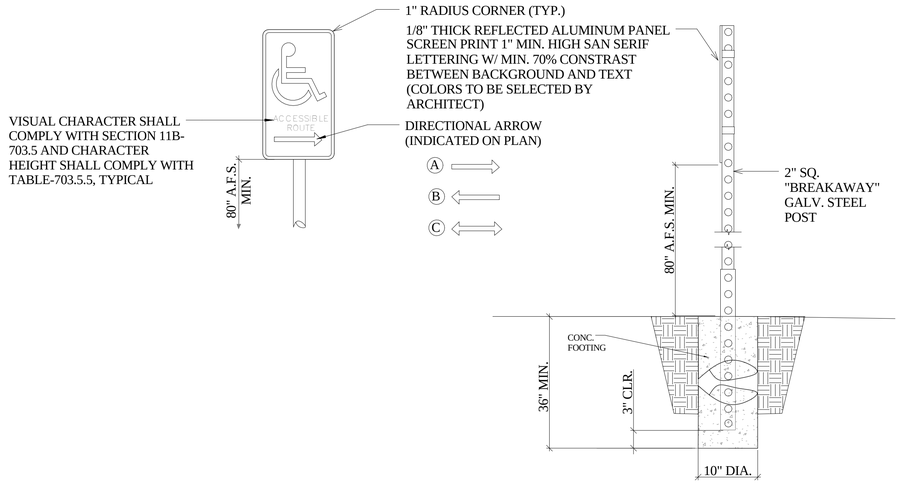

3 / A-3 ADA DIRECTIONAL SIGNS
1" = 1'-0"

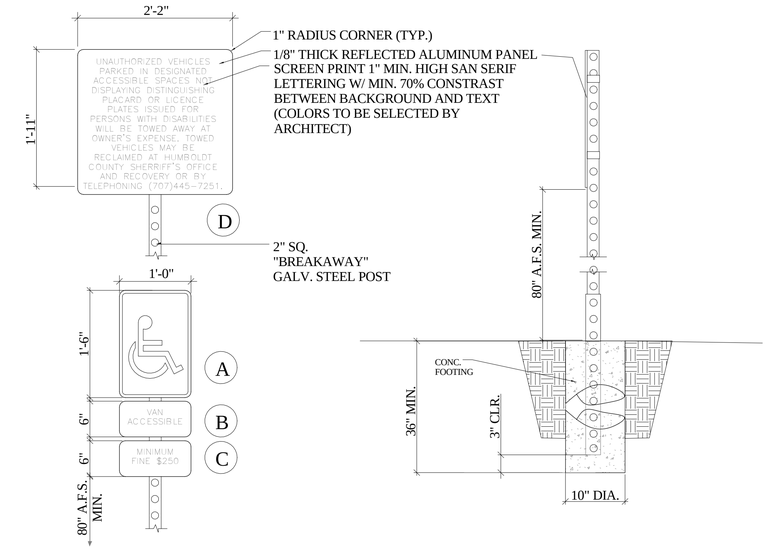

1 / A-3 ADA PARKING SIGNS
1" = 1'-0"

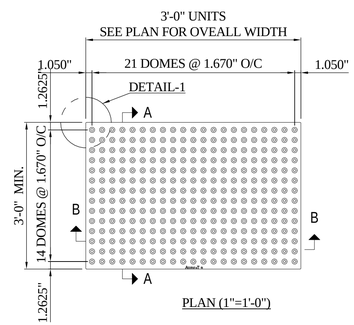

4 / A-3 TRUNCATED DOMES
1" = 1'-0"

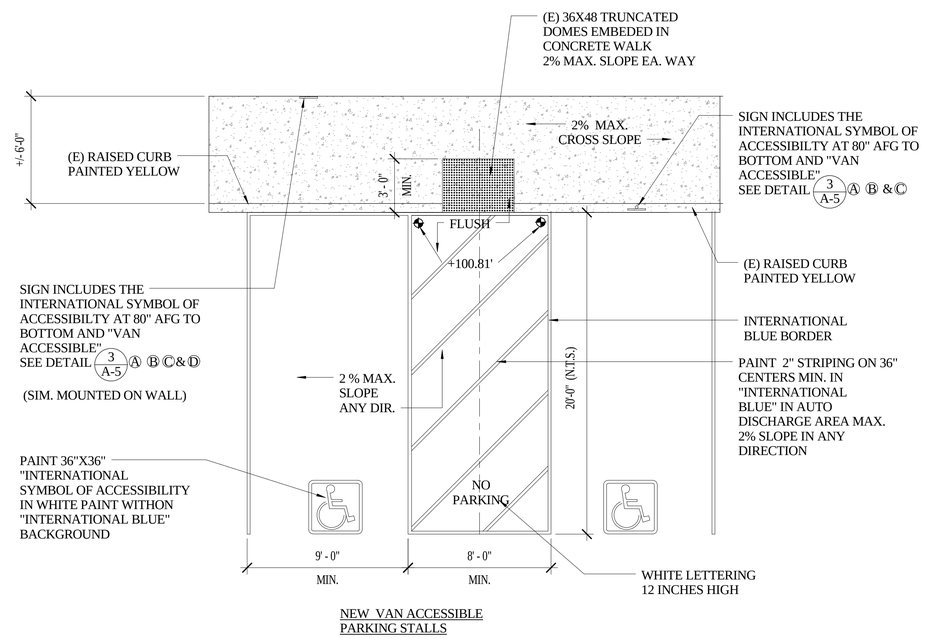

2 / A-3 (E) ACC VAN PARKING
1/4" = 1'-0"

EXTERIOR **INTERIOR**

NOTE: EXTERIOR DOOR FRAMES TO HAVE WEATHER STRIPPING, (NOT SHOWN FOR CLARITY)

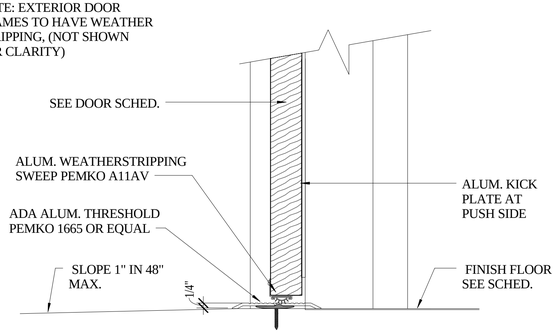

GENERAL NOTE:
CHANGE IN LEVEL BETWEEN 1/4" MIN. AND 1/2" HIGH MAX. SHALL BE BEVELED WITH A SLOPE NOT STEEPER THAN 1:2 PER 11B-303.3

6 / A-3 EXTERIOR DOOR THRESHOLD
3" = 1'-0"

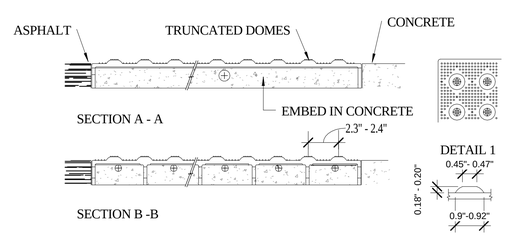

5 / A-3 TRUNCATED DOMES SECTION
3" = 1'-0"

PROJECT MANAGEMENT

ALAMEIDA ARCHITECTURE

CONSTRUCTION MANAGEMENT

555 S. MAIN STREET, SUITE 2
SEBASTOPOL, CA 95472
(707) 824-1219
WWW.ALAMEIDA.COM

PROJECT

TENANT IMPROVEMENTS FOR ECONOMIC DEVELOPMENT AND CHILD SUPPORT SERVICES

2420 6TH STREET
EUREKA, CA

REGISTERED ARCHITECT
GERALD R. ALAMEIDA
C-19767
Exp. 11/30/23
STATE OF CALIFORNIA

No.	Description	Date
1.	PLAN CHECK COMMENTS	12/12/22

SITE ACCESS DETAILS

Project number	2108
Date	5/8/22
Drawn by	Author
Checked by	Checker

A-3

Scale As indicated

5/22/2023 4:54:29 PM

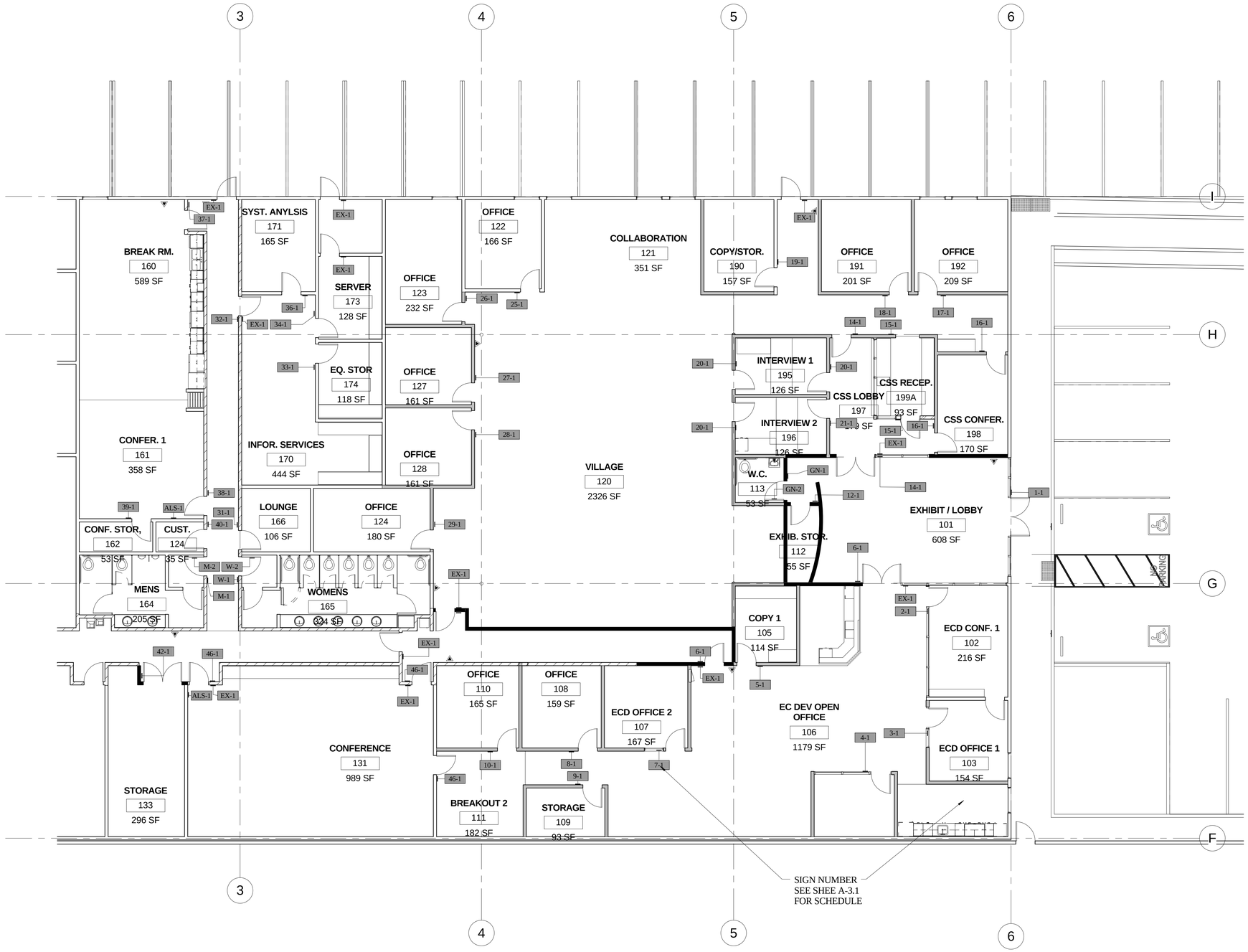

1 A-3.1 ADA SIGNAGE PLAN
1/8" = 1'-0"

PROJECT MANAGEMENT

ALAMEIDA ARCHITECTURE

CONSTRUCTION MANAGEMENT

555 S. MAIN STREET, SUITE 2
SEBASTOPOL, CA 95472
(707) 824-1219
WWW.ALAMEIDA.COM

COUNTY OF HUMBOLDT
The Home of the Redwoods

PROJECT

TENANT IMPROVEMENTS FOR ECONOMIC DEVELOPMENT AND CHILD SUPPORT SERVICES

2420 6TH STREET
EUREKA, CA

REGISTERED ARCHITECT
DONALD R. ALAMEIDA
C-19767
Exp. 11/30/23
STATE OF CALIFORNIA

No.	Description	Date
1.	PLAN CHECK COMMENTS	12/12/22

ADA SIGNAGE PLAN

Project number	2108
Date	5/8/22
Drawn by	Author
Checked by	Checker

A-3.1

Scale 1/8" = 1'-0"

5/2/2023 4:54:32 PM

SIGN SCHEDULE					
MARK	SIGN TEXT	MOUNT	DETAIL REF.	COUNT	COMMENTS
1-1	ENTRANCE	GLASS	1/A-3.2	1	
2-1		WALL	3/A-3.2	1	
3-1		WALL	3/A-3.2	1	
4-1		WALL	3/A-3.2	1	
5-1		WALL	3/A-3.2	1	
6-1		WALL	3/A-3.2	2	
7-1		GLASS	3/A-3.2	1	
8-1		WALL	3/A-3.2	1	
9-1		WALL	3/A-3.2	1	
10-1		WALL	1/A-3.2	1	
12-1	STORAGE	WALL	3/A3.2	1	
14-1	CHILD SOCIAL SERVICES	WALL	3/A-3.2	2	
15-1		WALL	3/A-3.2	2	
16-1	CSS-CONFERENCE RM.	WALL	3/A-3.2	2	
17-1		WALL	3/A-3.2	1	
18-1		WALL	3/A-3.2	1	
19-1		WALL	3/A-3.2	1	
20-1	INTERVIEW ROOM 1	WALL	3/A-3.2	3	
21-1	INTERVIEW ROOM 2	WALL	3/A-3.2	1	
25-1		WALL	3/A-3.2	1	
26-1		WALL	3/A-3.2	1	
27-1		WALL	3/A-3.2	1	
28-1		WALL	3/A-3.2	1	
29-1		WALL	3/A-3.2	1	
31-1		WALL	3/A-3.2	1	
32-1		WALL	3/A-3.2	1	
33-1		WALL	3/A-3.2	1	
34-1		WALL	3/A-3.2	1	
36-1		WALL	3/A-3.2	1	
37-1	BREAK ROOM	WALL	3/A-3.2	1	
38-1	CONFERENCE ROOM 1	WALL	3/A-3.2	1	
39-1		WALL	3/A-3.2	1	
40-1		WALL	3/A-3.2	1	
42-1		WALL	3/A-3.2	1	
46-1		WALL	3/A-3.2	3	
ALS-1		WALL	4/A-3.2	2	
EX-1	EXIT ROUTE	WALL	3/A-3.2	12	
GN-1	GENEDER NEUTRAL RESTROOM	WALL	3/A-3.2	1	
GN-2	CIRCLE / TRIANGLE [PICTOGRAM]	DOOR	2/A-3.2	1	
M-1	MEN'S RESTOOM	WALL	3/A-3.2	1	
M-2	TRIANGLE [PICTOGRAM]	DOOR	2/A-3.2	1	
W-1	WOMEN'S RESTROOM	WALL	3/A-3.2	1	
W-2	CIRCLE [PICTOGRAM]	DOOR	2/A-3.2	1	

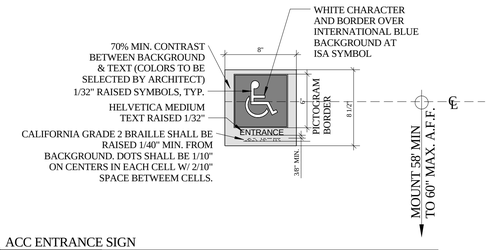

1 A-3.2 ACC ENTRANCE SIGN
1 1/2" = 1'-0"

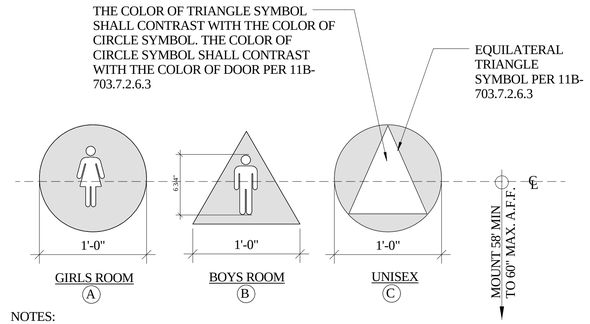

NOTES:

1. SIGNAGE TO BE 1/4" THICK.
2. ALL PICTOGRAMS SHALL BE IN CONTRASTING COLOR BACKGROUND
   ALL SURACES SHALL HAVE AN EGGSHELL FINISH TYP.
3. MOUNT ON DOORS W/NON STAINING ADHESIVE TYP.
4 CONFORM TO ALL APPLICABLE CODES.
5. POSITION ADDITIONAL ACCESSIBILITY SIGNAGE ON LATCH SIDE OF DOOR

2 A-3.2 ADA RESTROOM DOOR SIGNS
1 1/2" = 1'-0"

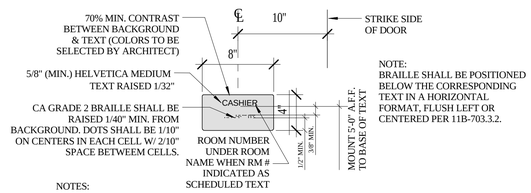

NOTES:

1. ALL PICTOGRAMS SHALL BE IN CONTRASTING COLOR BACKGROUND
2. ALL SURACES SHALL HAVE AN EGGSHELL FINISH TYP.
   MOUNT ON WALL W/NON STAINING ADHESIVE TYP.
3. CONFORM TO ALL APPLICABLE CODES.
4. 11B-703.4.1 HEIGHT ABOVE FINISH FLOOR OR GROUND. TAC¬ TILE CHARACTERS ON SIGNS SHALL BE LOCATED 48 INCHES (1219 MM) MINIMUM ABOVE THE FINISH FLOOR OR GROUND SURFACE, MEASURED FROM THE BASELINE OF THE LOWEST BRAILLE CELLS AND 60 INCHES (1524 MM) MAXIMUM ABOVE THE FINISH FLOOR OR GROUND SURFACE, MEASURED FROM THE BASELINE OF THE HIGHEST LINE OF RAISED CHARACTERS

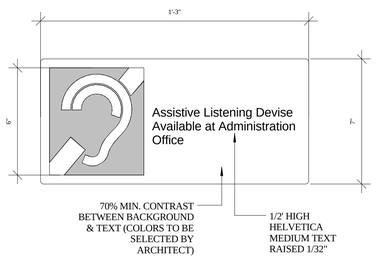

4 A-3.2 ASSISTED LISTENING SIGN
3" = 1'-0"

3 A-3.2 ADA STRIKE SIDE ROOM SIGN
1 1/2" = 1'-0"

PROJECT MANAGEMENT

ALAMEIDA ARCHITECTURE

CONSTRUCTION MANAGEMENT

555 S. MAIN STREET, SUITE 2
SEBASTOPOL, CA 95472
(707) 824-1219
WWW.ALAMEIDA.COM

PROJECT

TENANT IMPROVEMENTS FOR ECONOMIC DEVELOPMENT AND CHILD SUPPORT SERVICES

2420 6TH STREET
EUREKA, CA

REGISTERED ARCHITECT
OSWALD R. ALAMEIDA
C-19767
Exp. 11/30/23
STATE OF CALIFORNIA

No.	Description	Date
1.	PLAN CHECK COMMENTS	12/12/22

SIGN SCHEDULE & DETAILS

Project number	2108
Date	5/8/22
Drawn by	Author
Checked by	Checker

A-3.2

Scale As indicated

5/22/2023 4:54:34 PM

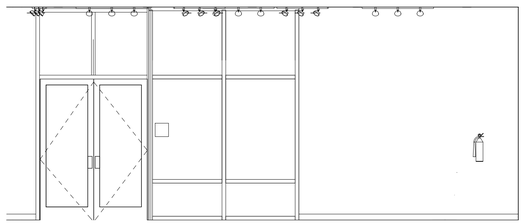

5 A-4 LOBBY - WEST
1/4" = 1'-0"

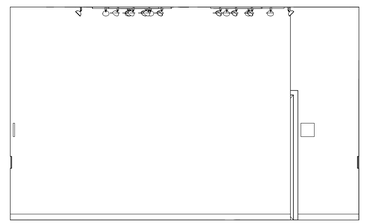

4 A-4 LOBBY - SOUTH
1/4" = 1'-0"

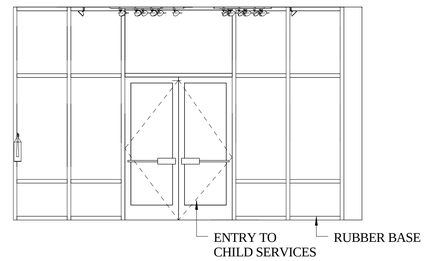

3 A-4 LOBBY - NORTH
1/4" = 1'-0"

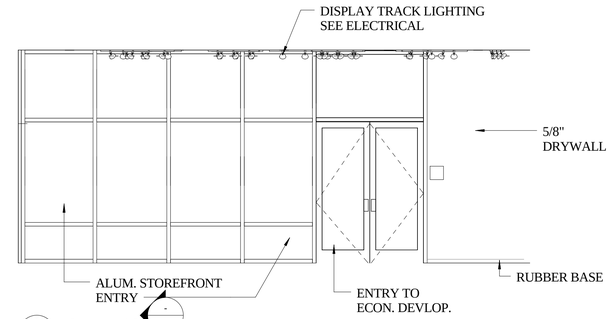

2 A-4 LOBBY - EAST
1/4" = 1'-0"

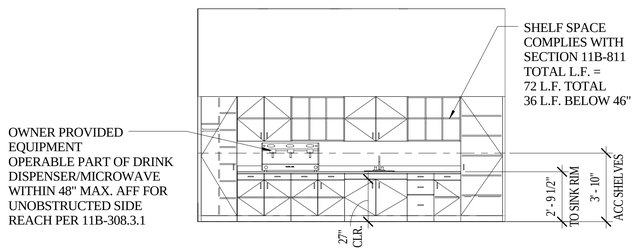

9 A-4 COFFEE BAR
1/4" = 1'-0"

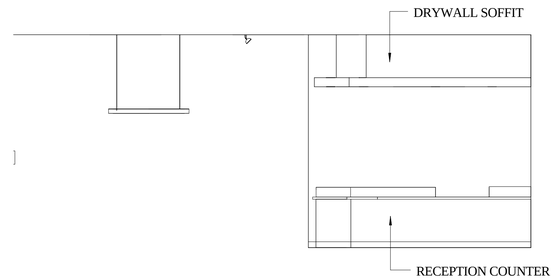

8 A-4 ECONOMIC DEV. - RECEPTION
1/4" = 1'-0"

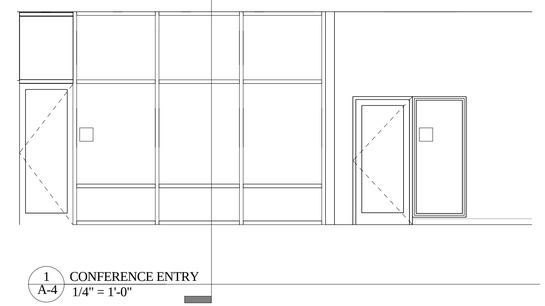

1 A-4 CONFERENCE ENTRY
1/4" = 1'-0"

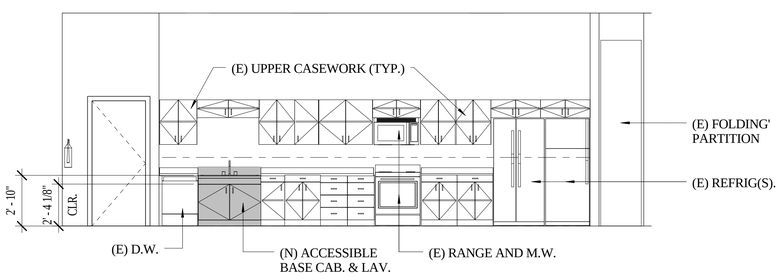

12 A-4 BREAK ROOM - KITCHEN
1/4" = 1'-0"

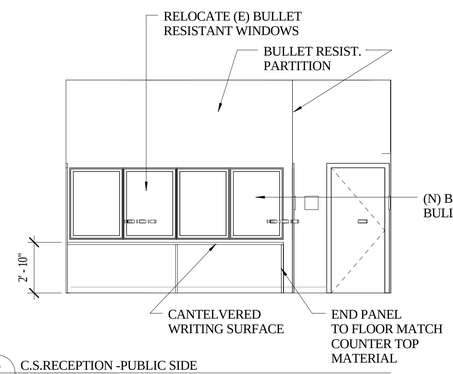

6 A-4 C.S.RECEPTION -PUBLIC SIDE
1/4" = 1'-0"

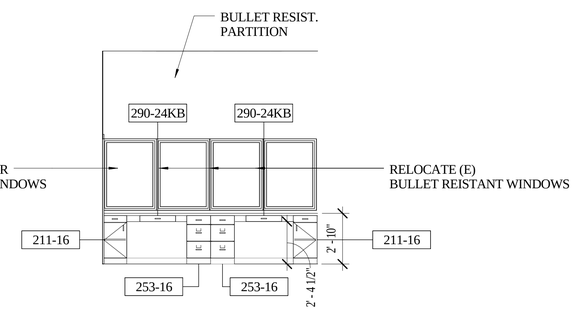

7 A-4 C. S.RECEPT. -EMPLOYEE SIDE
1/4" = 1'-0"

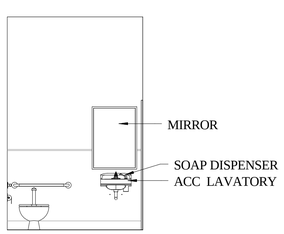

15 A-4 G.N. W.C. - WEST
1/4" = 1'-0"

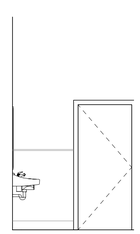

14 A-4 G.N. W.C. - NORTH
1/4" = 1'-0"

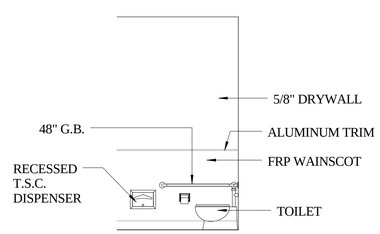

13 A-4 G.N. W.C. -NORTH
1/4" = 1'-0"

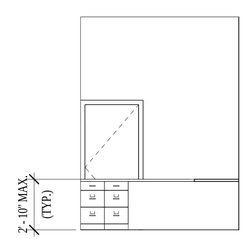

10 A-4 INTERV. RM - EMPLOYEE SIDE NORTH
1/4" = 1'-0"

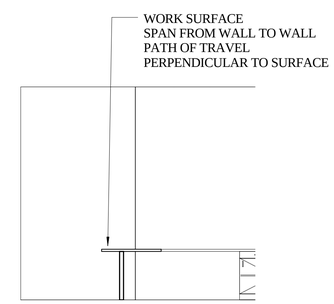

11 A-4 INTERV. RM. EMPLOYEE SIDE - EAST
1/4" = 1'-0"

PROJECT MANAGEMENT

ALAMEIDA
ARCHITECTURE

CONSTRUCTION MANAGEMENT

555 S. MAIN STREET, SUITE 2
SEBASTOPOL, CA 95472
(707) 824-1219
WWW.ALAMEIDA.COM

COUNTY OF HUMBOLDT
The Home of the Redwoods

PROJECT

TENANT IMPROVEMENTS FOR ECONOMIC DEVELOPMENT AND CHILD SUPPORT SERVICES

2420 6TH STREET
EUREKA, CA

REGISTERED ARCHITECT
DONALD R. ALAMEIDA
C-19767
Exp. 11/30/23
STATE OF CALIFORNIA

No.	Description	Date
1.	PLAN CHECK COMMENTS	12/12/22

INTERIOR ELEVEATIONS

Project number	2108
Date	5/8/22
Drawn by	Author
Checked by	Checker

A-4

Scale 1/4" = 1'-0"

5/2/2023 4:54:39 PM

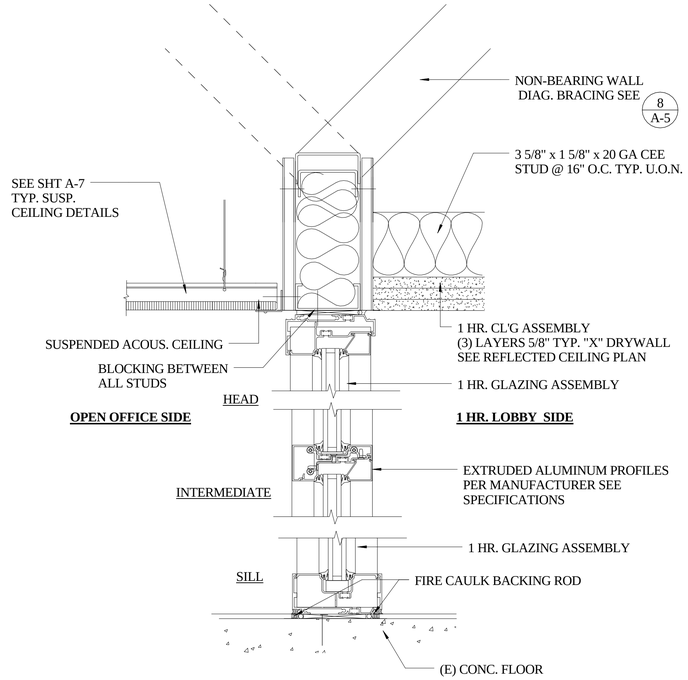

4 A-4.1 GLASS PARTITION @ 1 HR LOBBY
3" = 1'-0"

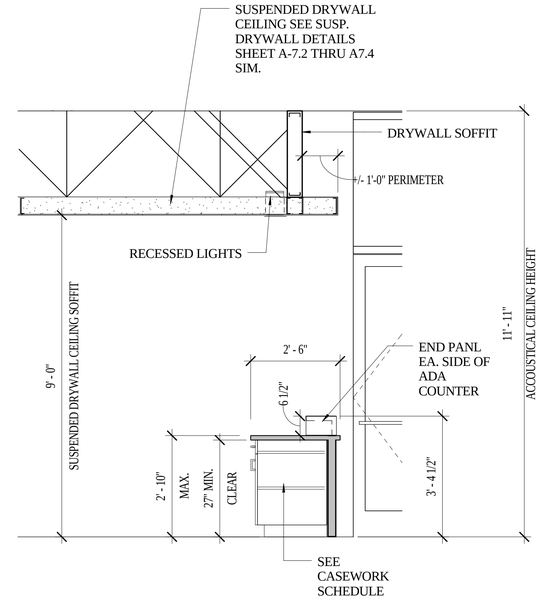

1 A-4.1 EC DEV. RECEPTION
1/2" = 1'-0"

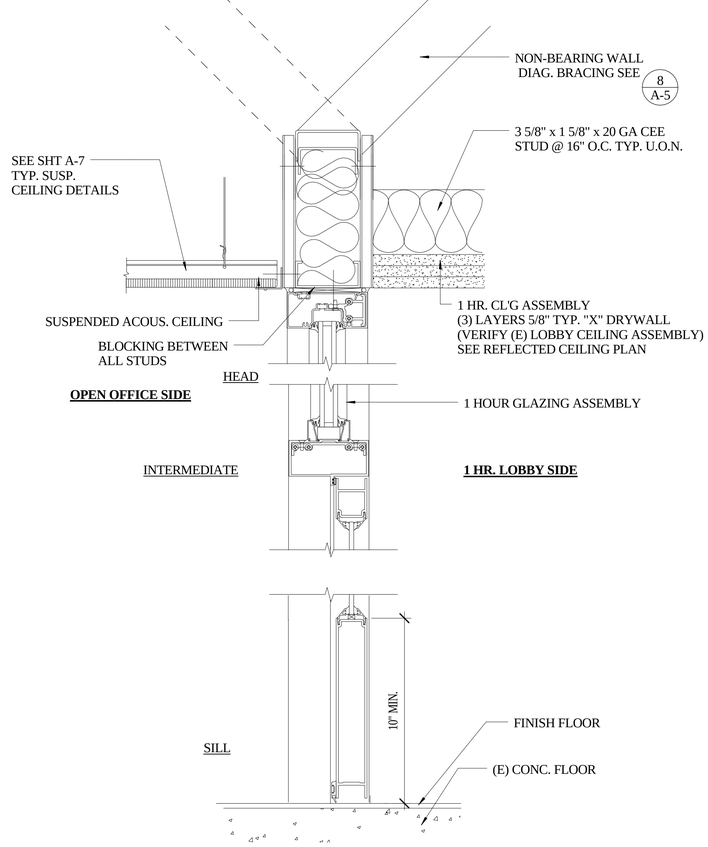

5 A-4.1 GLASS ENTRY DOOR @ 1 HR LOBBY
3" = 1'-0"

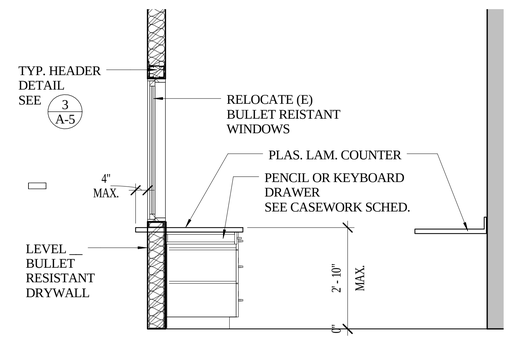

2 A-4.1 CSS RECEPTION - SECTION
1/2" = 1'-0"

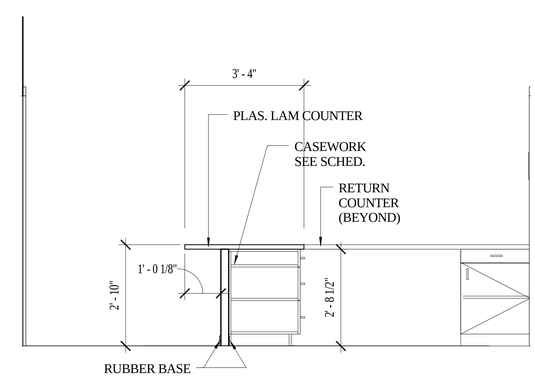

NOTE: WORK SURFACE TO SPAN
FROM WAL TO WALL, PATH OF TRAVEL
PERPENDICULAR TO WORK SURFACE

3 A-4.1 INERVIEW RM. COUNTER
1/2" = 1'-0"

PROJECT MANAGEMENT

ALAMEIDA
ARCHITECTURE

CONSTRUCTION MANAGEMENT

555 S. MAIN STREET, SUITE 2
SEBASTOPOL, CA 95472
(707) 824-1219
WWW.ALAMEIDA.COM

COUNTY OF HUMBOLDT
The Home of the Redwoods

PROJECT

TENANT IMPROVEMENTS FOR ECONOMIC DEVELOPMENT AND CHILD SUPPORT SERVICES

2420 6TH STREET
EUREKA, CA

REGISTERED ARCHITECT
OSWALD R. ALAMEIDA
C-19767
Exp. 11/30/23
STATE OF CALIFORNIA

No.	Description	Date
1.	PLAN CHECK COMMENTS	12/12/22

RECEPTION AND COUNTER SECTIONS

Project number	2108
Date	5/8/22
Drawn by	Author
Checked by	Checker

A-4.1

Scale As indicated

5/2/2023 4:54:41 PM

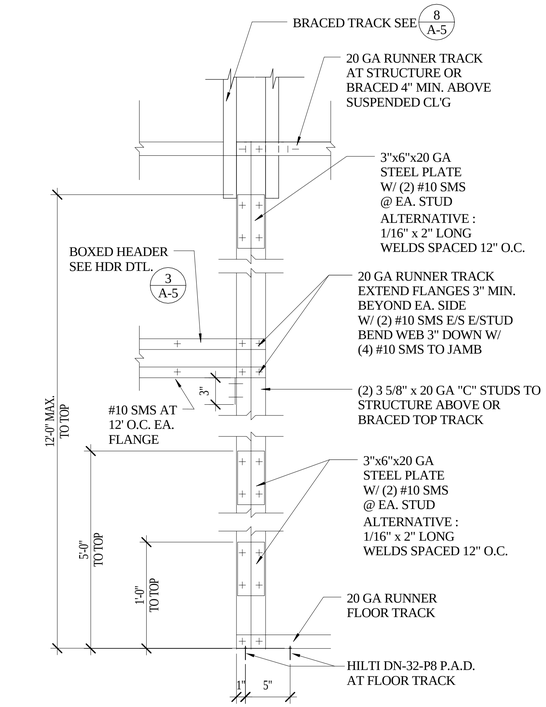

7 A-5 TYPICAL DOUBLE STUD JAMB FRAMING
1 1/2" = 1'-0"

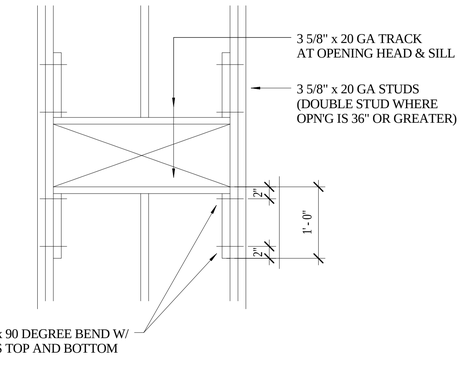

4 A-5 DUCT OPENING FRAMING AT RATED PARTITION FRAMING
1" = 1'-0"

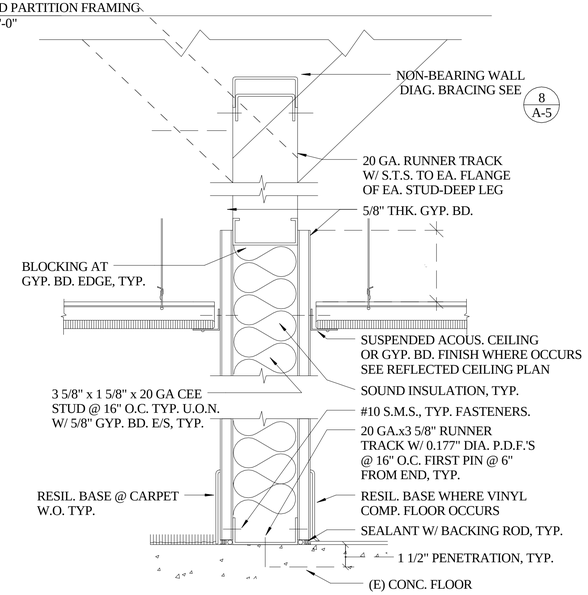

5 A-5 PARTITION NON-RATED - NON COMBUSTIBLE
3" = 1'-0"

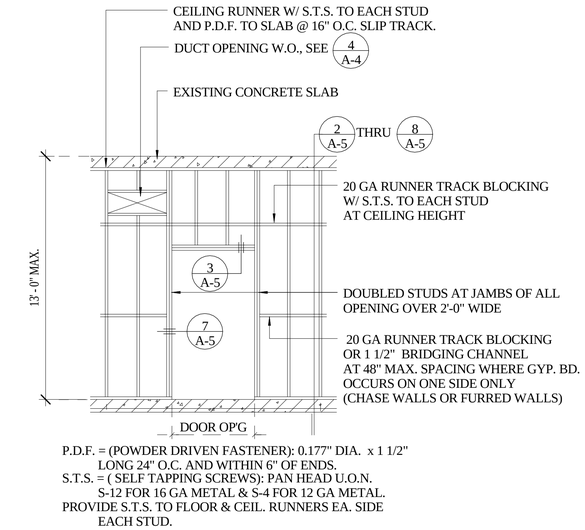

P.D.F. = (POWDER DRIVEN FASTENER): 0.177" DIA. x 1 1/2" LONG 24" O.C. AND WITHIN 6" OF ENDS.
S.T.S. = (SELF TAPPING SCREWS): PAN HEAD U.O.N. S-12 FOR 16 GA METAL & S-4 FOR 12 GA METAL.
PROVIDE S.T.S. TO FLOOR & CEIL. RUNNERS EA. SIDE EACH STUD.

1 A-5 PARTITION FRAMING DIAGRAM
3" = 1'-0"

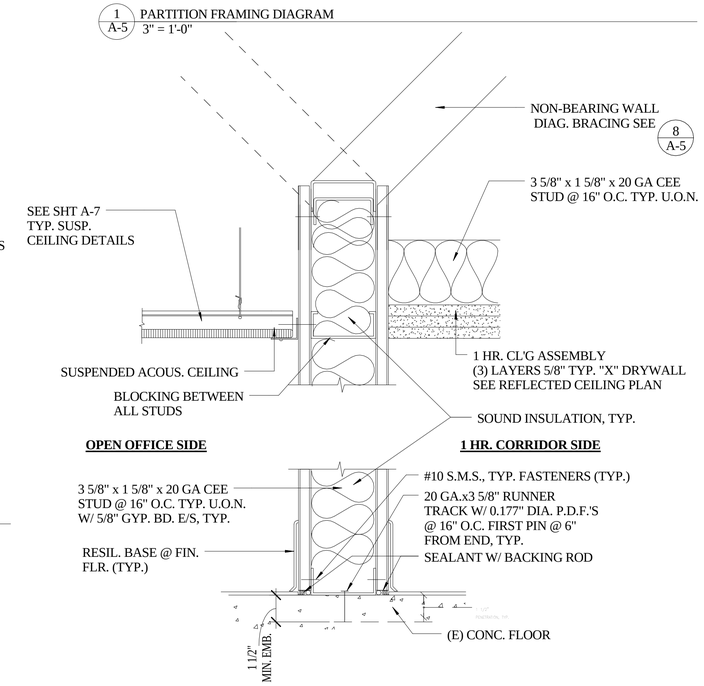

2 A-5 1 HR CORRIDOR
3" = 1'-0"

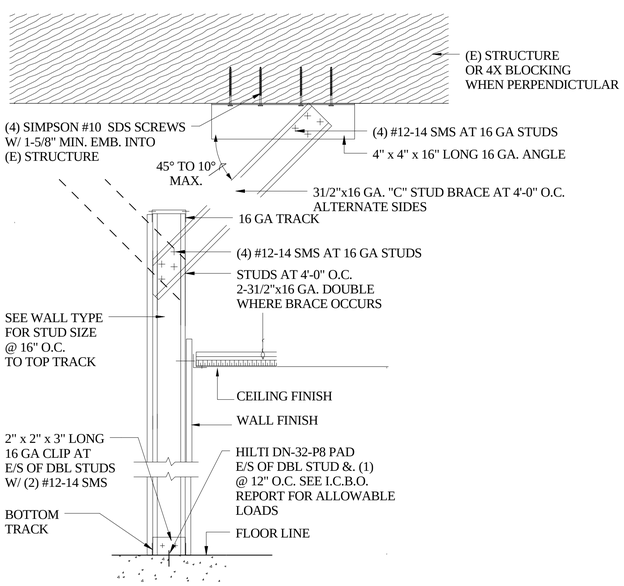

PARTITION BRACING: 4'-0" O.C. MAX. & EA. DOOR JAMB

8 A-5 BRACED PARTITION
1 1/2" = 1'-0"

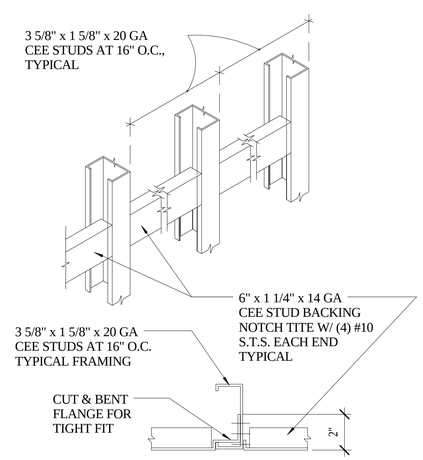

6 A-5 TYP. BACKING PLATE
3" = 1'-0"

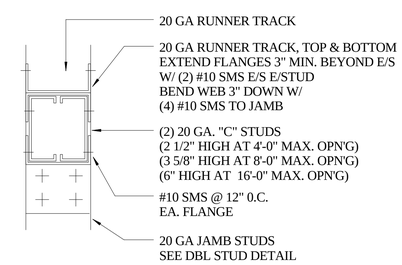

3 A-5 TYPICAL HEADER FRAMING
3" = 1'-0"

PROJECT MANAGEMENT
ALAMEIDA ARCHITECTURE
CONSTRUCTION MANAGEMENT
555 S. MAIN STREET, SUITE 2
SEBASTOPOL, CA 95472
(707) 824-1219
WWW.ALAMEIDA.COM

COUNTY OF HUMBOLDT
The Home of the Redwoods

PROJECT

TENANT IMPROVEMENTS FOR ECONOMIC DEVELOPMENT AND CHILD SUPPORT SERVICES

2420 6TH STREET
EUREKA, CA

REGISTERED ARCHITECT
DONALD R. ALAMEIDA
C-19767
Exp. 11/30/23
STATE OF CALIFORNIA

No.	Description	Date
1.	PLAN CHECK COMMENTS	12/12/22

TYPICAL METAL STUD PARTITION CONSTRUCTION

Project number	2108
Date	5/8/22
Drawn by	Author
Checked by	Checker

A-5

Scale: As indicated

5/2/2023 4:54:43 PM

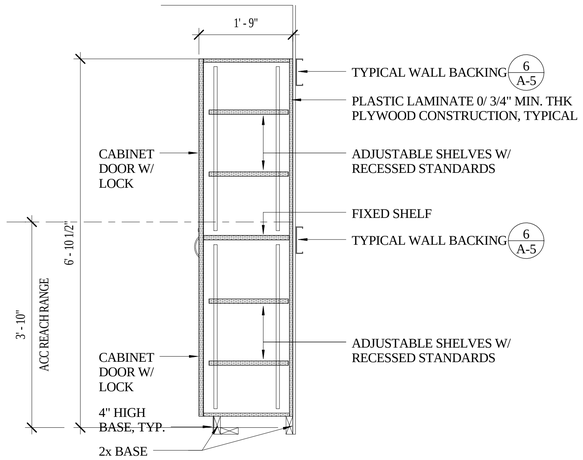

4/A-6 STORAGE ROOM TALL CABINETS W/ LOCKS
3/4" = 1'-0"

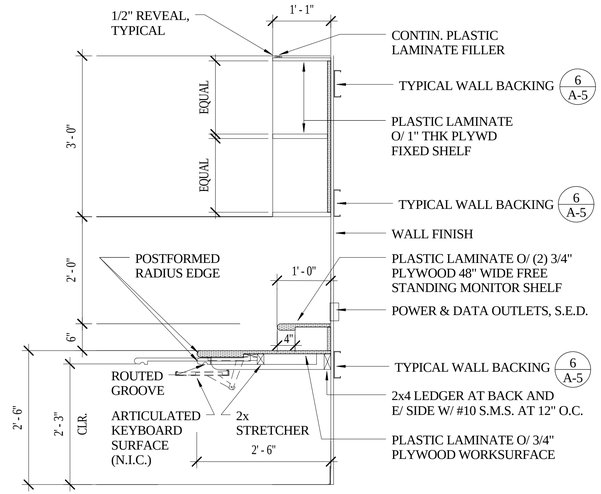

1/A-6 WORKSURFACE W/ WALL SHELVING
3/4" = 1'-0"

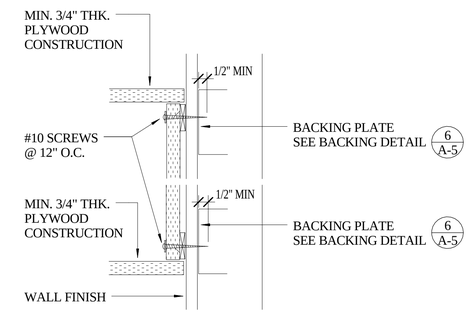

2/A-6 WALL CABINET ATTACHMENT TO TYPICAL BACKING PLATE
3" = 1'-0"

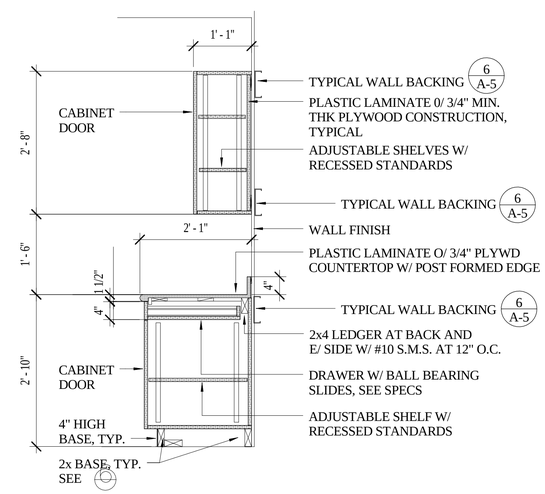

3/A-6 TYPICAL BASE & WALL CABINET W/ DRAWER & DOOR
3/4" = 1'-0"

PROJECT MANAGEMENT

ALAMEIDA ARCHITECTURE

CONSTRUCTION MANAGEMENT

555 S. MAIN STREET, SUITE 2
SEBASTOPOL, CA 95472
(707) 824-1219
WWW.ALAMEIDA.COM

PROJECT

TENANT IMPROVEMENTS FOR ECONOMIC DEVELOPMENT AND CHILD SUPPORT SERVICES

2420 6TH STREET
EUREKA, CA

REGISTERED ARCHITECT DONALD R. ALAMEIDA C-19767 Exp. 11/30/23 STATE OF CALIFORNIA

No.	Description	Date
1.	PLAN CHECK COMMENTS	12/12/22

CASEWORK DETAILS

Project number	2108
Date	5/8/22
Drawn by	Author
Checked by	Checker

A-6

Scale	As indicated

5/2/2023 4:54:45 PM

ROOM CONTROLS SEQUENCE OF OPERATION

RM. NO.	NAME	OCC SETPOINT	PHOTO CELL SETPOINT	OPERATING HOURS		AFTER HOURS	AUTOMATIC DEMAND RESPONSE
				LIGHTING	RECEPTACLES	LIGHTING & RECEPT.	
101	EXHIBIT / LOBBY	AUTO ON/OFF IN 20 MIN.	60 F.C.	OCC SENSOR TO 100% / 50% @ 15 MIN. UNOCCUPIED	N/A	SAME AS OPER. HRS	DIM. 50%
102	ECD CONF. 1	MANUAL ON/OFF IN 20 MIN.	75 F.C. AT WORKSURFACE	OCC SENSOR TO 100% / 50% @ 15 MIN. UNOCCUPIED	50 % P.M. CONTROLLED.	SAME AS OPER. HRS	DIM 20%
103	ECD OFFICE 1	MANUAL ON/OFF IN 20 MIN.	75 F.C. AT WORKSURFACE	OFF PER OCC SENSOR, DIM VIA MANUAL CONTROLS AND PHOTOSENSOR	50 % P.M. CONTROLLED.	SAME AS OPER. HRS	DIM 20%
104	BREAK OUT 1	MANUAL ON/OFF IN 20 MIN.	75 F.C. AT WORKSURFACE	OFF PER OCC SENSOR, DIM VIA MANUAL CONTROLS AND PHOTOSENSOR	N/A	SAME AS OPER. HRS	DIM 20%
105	COPY 1	MANUAL ON/OFF IN 20 MIN.	60 F.C.	OCC SENSOR TO 100% / 50% @ 15 MIN. UNOCCUPIED	N/A	SAME AS OPER. HRS	N/A
106	EC DEV OPEN OFFICE	AUTO ON/OFF IN 20 MIN.	75 F.C. AT WORKSURFACE	OFF PER OCC SENSOR, DIM VIA MANUAL CONTROLS AND PHOTOSENSOR	50 % P.M. CONTROLLED.	SAME AS OPER. HRS	DIM 20%
106A	RECEPT.	AUTO ON/OFF IN 20 MIN.	75 F.C. AT WORKSURFACE	OCC SENSOR TO 100% / 50% @ 15 MIN. UNOCCUPIED	50 % P.M. CONTROLLED.	SAME AS OPER. HRS	DIM 20%
106B	CAFE HALL	AUTO ON/ OFF IN 20 MIN.	60 F.C.	OFF PER OCC SENSOR, DIM VIA MANUAL CONTROLS AND PHOTOSENSOR	N/A	SAME AS OPER. HRS	N/A
107	ECD OFFICE 2	MANUAL ON/OFF IN 20 MIN.	75 F.C. AT WORKSURFACE	OFF PER OCC SENSOR, DIM VIA MANUAL CONTROLS AND PHOTOSENSOR	50 % P.M. CONTROLLED.	SAME AS OPER. HRS	DIM 20%
108	OFFICE	MANUAL ON/OFF IN 20 MIN.	75 F.C. AT WORKSURFACE	OFF PER OCC SENSOR, DIM VIA MANUAL CONTROLS AND PHOTOSENSOR	50 % P.M. CONTROLLED.	SAME AS OPER. HRS	DIM 20%
109	STORAGE	MANUAL ON/OFF IN 20 MIN.	60 F.C.	OFF PER OCC SENSOR, DIM VIA MANUAL CONTROLS AND PHOTOSENSOR	N/A	SAME AS OPER. HRS	DIM 20%
110	OFFICE	MANUAL ON/OFF IN 20 MIN.	75 F.C. AT WORKSURFACE	OFF PER OCC SENSOR, DIM VIA MANUAL CONTROLS AND PHOTOSENSOR	50 % P.M. CONTROLLED.	SAME AS OPER. HRS	DIM 20%
111	BREAKOUT 2	MANUAL ON/OFF IN 20 MIN.	60 F.C.	OFF PER OCC SENSOR, DIM VIA MANUAL CONTROLS AND PHOTOSENSOR	50 % P.M. CONTROLLED.	SAME AS OPER. HRS	DIM 20%
112	EXHIB. STOR.	MANUAL ON/OFF IN 20 MIN.	60 F.C.	ON OFF VIA OCC SENSOR	N/A	SAME AS OPER. HRS	N/A
113	W.C.	AUTO ON/ OFF IN 20 MIN.	N/A	ON OFF VIA OCC SENSOR	N/A	SAME AS OPER. HRS	N/A
120	VILLAGE	MANUAL ON/OFF IN 20 MIN.	75 F.C. AT WORKSURFACE	OFF PER OCC SENSOR, DIM VIA MANUAL CONTROLS AND PHOTOSENSOR	50 % P.M. CONTROLLED.	SAME AS OPER. HRS	DIM 20%
121	COLLABORATION	MANUAL ON/OFF IN 20 MIN. DIM VIA DAYLITGHT SENSOR	75 F.C. AT WORKSURFACE	ON OFF VIA OCC SENSOR /DAYLIGHT DIMMING	50 % P.M. CONTROLLED.	SAME AS OPER. HRS	DIM 20%
122	OFFICE	MANUAL ON/OFF IN 20 MIN.	75 F.C. AT WORKSURFACE	OFF PER OCC SENSOR, DIM VIA MANUAL CONTROLS AND PHOTOSENSOR	50 % P.M. CONTROLLED.	SAME AS OPER. HRS	DIM 20%
123	OFFICE	MANUAL ON/OFF IN 20 MIN. DIM VIA DAYLITGHT SENSOR	75 F.C. AT WORKSURFACE	ON OFF VIA OCC SENSOR /DAYLIGHT DIMMING	50 % P.M. CONTROLLED.	SAME AS OPER. HRS	DIM 20%
124	OFFICE	MANUAL ON/OFF IN 20 MIN.	75 F.C. AT WORKSURFACE	OFF PER OCC SENSOR, DIM VIA MANUAL CONTROLS AND PHOTOSENSOR	50 % P.M. CONTROLLED.	SAME AS OPER. HRS	DIM 20%
124	CUST.	MANUAL ON/OFF IN 20 MIN.	60 F.C.	OFF PER OCC SENSOR, DIM VIA MANUAL CONTROLS AND PHOTOSENSOR	N/A	SAME AS OPER. HRS	N/A
127	OFFICE	MANUAL ON/OFF IN 20 MIN.	75 F.C. AT WORKSURFACE	OFF PER OCC SENSOR, DIM VIA MANUAL CONTROLS AND PHOTOSENSOR	50 % P.M. CONTROLLED.	SAME AS OPER. HRS	DIM 20%
128	OFFICE	MANUAL ON/OFF IN 20 MIN.	75 F.C. AT WORKSURFACE	OFF PER OCC SENSOR, DIM VIA MANUAL CONTROLS AND PHOTOSENSOR	50 % P.M. CONTROLLED.	SAME AS OPER. HRS	DIM 20%
129	OFFICE						
130	OFFICE						
131	CONFERENCE	MANUAL ON/OFF IN 20 MIN.	75 F.C. AT WORKSURFACE	OFF PER OCC SENSOR, DIM VIA MANUAL CONTROLS AND PHOTOSENSOR	50 % P.M. CONTROLLED.	SAME AS OPER. HRS	DIM 20%
132	OFFICE						
133	STORAGE	MANUAL ON/OFF IN 20 MIN.	60 F.C.	OFF PER OCC SENSOR, DIM VIA MANUAL CONTROLS AND PHOTOSENSOR	50 % P.M. CONTROLLED.	SAME AS OPER. HRS	N/A
134	OFFICE						
135	OPEN OFFICE						
136	OFFICE						
137	OFFICE						

ROOM CONTROLS SEQUENCE OF OPERATION

RM. NO.	NAME	OCC SETPOINT	PHOTO CELL SETPOINT	OPERATING HOURS		AFTER HOURS	AUTOMATIC DEMAND RESPONSE
				LIGHTING	RECEPTACLES	LIGHTING & RECEPT.	
138	OFFICE						
139	OFFICE						
140	RECEPT.						
141	OFFICE						
142	OFFICE						
143	CORRIDOR	AUTO ON/OFF IN 20 MIN.	60 F.C.	OCC SENSOR TO 100% / 50% @ 15 MIN. UNOCCUPIED	N/A	OCC SENSOR TO 100% / OFF 20 MIN. NO OCCUPANTS	DIM. 50%
144	OFFICE						
145	OFFICE						
146	OFFICE						
147	OFFICE	MANUAL ON/OFF IN 20 MIN.	75 F.C. AT WORKSURFACE	OCC SENSOR TO 100% / 50% @ 15 MIN. UNOCCUPIED	50 % P.M. CONTROLLED.	SAME AS OPER. HRS	DIM 20%
148	STOR.						
160	BREAK RM.	MANUAL ON/OFF IN 20 MIN.	60 F.C.	OCC SENSOR TO 100% / 50% @ 15 MIN. UNOCCUPIED	50 % P.M. CONTROLLED.	SAME AS OPER. HRS	DIM 20%
161	CONFER. 1	MANUAL ON/OFF IN 20 MIN.	75 F.C. AT WORKSURFACE	OFF PER OCC SENSOR, DIM VIA MANUAL CONTROLS AND PHOTOSENSOR	50 % P.M. CONTROLLED.	SAME AS OPER. HRS	DIM 20%
162	CONF. STOR,	MANUAL ON/OFF IN 20 MIN.	60 F.C.	OFF PER OCC SENSOR, DIM VIA MANUAL CONTROLS AND PHOTOSENSOR	N/A	SAME AS OPER. HRS	DIM. 50%
164	MENS	AUTO ON/ OFF IN 20 MIN.	N/A	ON OFF VIA OCC SENSOR	N/A	SAME AS OPER. HRS	N/A
165	WOMENS	AUTO ON/ OFF IN 20 MIN.	N/A	ON OFF VIA OCC SENSOR	N/A	SAME AS OPER. HRS	N/A
166	LOUNGE	MANUAL ON/OFF IN 20 MIN.	60 F.C.	OFF PER OCC SENSOR, DIM VIA MANUAL CONTROLS AND PHOTOSENSOR	50 % P.M. CONTROLLED.	SAME AS OPER. HRS	DIM 20%
170	INFOR. SERVICES	EXISTING	EXISTING	EXISTING	EXISTING	SAME AS OPER. HRS	EXISTING
171	SYST. ANYLSIS	EXISTING	EXISTING	EXISTING	EXISTING	SAME AS OPER. HRS	EXISTING
172	TEL. RM	EXISTING	EXISTING	EXISTING	EXISTING	SAME AS OPER. HRS	EXISTING
173	SERVER	EXISTING	EXISTING	EXISTING	EXISTING	SAME AS OPER. HRS	EXISTING
174	EQ. STOR	EXISTING	EXISTING	EXISTING	EXISTING	SAME AS OPER. HRS	EXISTING
180	CORRIDOR	AUTO ON/ OFF IN 20 MIN.	60 F.C.	OCC SENSOR TO 100% / 50% @ 15 MIN. UNOCCUPIED	N/A	SAME AS OPER. HRS	DIM 20%
181	CORRIDOR	AUTO ON/ OFF IN 20 MIN.	60 F.C.	OCC SENSOR TO 100% / 50% @ 15 MIN. UNOCCUPIED	N/A	SAME AS OPER. HRS	DIM 20%
190	COPY/STOR.	MANUAL ON/OFF IN 20 MIN.	60 F.C.	OFF PER OCC SENSOR, DIM VIA MANUAL CONTROLS AND PHOTOSENSOR	50 % P.M. CONTROLLED.	SAME AS OPER. HRS	DIM 20%
191	OFFICE	MANUAL ON/OFF IN 20 MIN.	75 F.C. AT WORKSURFACE	OFF PER OCC SENSOR, DIM VIA MANUAL CONTROLS AND PHOTOSENSOR	50 % P.M. CONTROLLED.	SAME AS OPER. HRS	DIM 20%
192	OFFICE	MANUAL ON/OFF IN 20 MIN.	75 F.C. AT WORKSURFACE	OFF PER OCC SENSOR, DIM VIA MANUAL CONTROLS AND PHOTOSENSOR	50 % P.M. CONTROLLED.	SAME AS OPER. HRS	DIM 20%
194	HALL	AUTO ON/ OFF IN 20 MIN.	60 F.C.	OCC SENSOR TO 100% / 50% @ 15 MIN. UNOCCUPIED	N/A	SAME AS OPER. HRS	DIM 20%
195	INTERVIEW 1	MANUAL ON/OFF IN 20 MIN.	75 F.C. AT WORKSURFACE	OFF PER OCC SENSOR, DIM VIA MANUAL CONTROLS AND PHOTOSENSOR	50 % P.M. CONTROLLED.	SAME AS OPER. HRS	DIM 20%
196	INTERVIEW 2	MANUAL ON/OFF IN 20 MIN.	75 F.C. AT WORKSURFACE	OFF PER OCC SENSOR, DIM VIA MANUAL CONTROLS AND PHOTOSENSOR	50 % P.M. CONTROLLED.	SAME AS OPER. HRS	DIM 20%
197	CSS LOBBY	AUTO ON/ OFF IN 20 MIN.	60 F.C.	ON OFF VIA OCC SENSOR /DAYLIGHT DIMMING	N/A	SAME AS OPER. HRS	DIM 20%
198	CSS CONFER.	MANUAL ON/OFF IN 20 MIN.	60 F.C.	OFF PER OCC SENSOR, DIM VIA MANUAL CONTROLS AND PHOTOSENSOR	50 % P.M. CONTROLLED.	SAME AS OPER. HRS	DIM 20%
199A	CSS RECEP.	AUTO ON/ OFF IN 20 MIN.	75 F.C. AT WORKSURFACE	OCC SENSOR TO 100% / 50% @ 15 MIN. UNOCCUPIED	50 % P.M. CONTROLLED.	SAME AS OPER. HRS	DIM 20%

NOTE:
1. SCHEDULE TO DEMONSTRATE DESIRED PROGRAMMING , SEE DAYLIGHTING PLAN AND LEGEND FOR EQUIPMENT/DEVICES REQUIRED BY ROOM OR AREA

2. VERIFY SETPOINTS WITH THE OWNER

3. ALL LIGHTING CONTROL DEVICES TO BE CALIBRATED TO MEET SPECIFICATIONS AND CA TITLE 24 ENERGY AND CALGREEN STANDARDS

PROJECT MANAGEMENT

ALAMEIDA ARCHITECTURE

CONSTRUCTION MANAGEMENT

555 S. MAIN STREET, SUITE 2
SEBASTOPOL, CA 95472
(707) 824-1219
WWW.ALAMEIDA.COM

PROJECT

TENANT IMPROVENMENTS FOR ECONOMIC DEVELOPMENT AND CHILD SUPPORT SERVICES

2420 6TH STREET
EUREKA, CA

REGISTERED ARCHITECT RONALD R. ALAMEIDA C-19767 Exp. 11/30/23 STATE OF CALIFORNIA

No.	Description	Date
1.	PLAN CHECK COMMENTS	12/12/22

POWER & LIGHTING CONTROLS SEQUENCE OF OPERATION

Project number	2108
Date	5/8/22
Drawn by	Author
Checked by	Checker

A-7

Scale

5/2/2023 4:54:47 PM

5/9/2017 9:06:03 AM

GENERAL NOTES

1. CONSTRUCTION, WORKMANSHIP AND MATERIAL SHALL CONFORM TO THE 2013 CALIFORNIA BUILDING STANDARDS CODE (CBSC 2013).

2. THE CONTRACTOR SHALL NOTIFY OSHPD AND THE REGISTERED DESIGN PROFESSIONAL (RDP) IN RESPONSIBLE CHARGE WHERE A CONFLICT OR DISCREPANCY OCCURS BETWEEN THE CONSTRUCTION DRAWINGS AND ANY OTHER PORTION OF THE CONSTRUCTION DOCUMENTS, FIELD CONDITIONS, OR WHERE ANY CONDITIONS ARISE NOT COVERED BY THESE DOCUMENTS WHEREIN WORK WILL NOT COMPLY WITH CODE REQUIREMENTS.

3. THE INTENT OF THE DRAWINGS AND SPECIFICATIONS IS TO CONSTRUCT THE HOSPITAL BUILDING IN ACCORDANCE WITH THE CALIFORNIA BUILDING STANDARD CODE, 2013 (CBSC 2013). SHOULD ANY CONDITION DEVELOP NOT COVERED BY THE APPROVED CONSTRUCTION DOCUMENTS WHEREIN THE WORK WILL NOT COMPLY WITH CBSC 2013, A CHANGE ORDER DETAILING AND SPECIFYING THE REQUIRED WORK SHALL BE SUBMITTED TO AND APPROVED BY OSHPD BEFORE PROCEEDING WITH THE WORK.

4. GALVANIZED METAL STUDS, TRACKS AND SHEET STEEL SHALL CONFORM TO ASTM A653-11 MATERIAL, OR OTHER EQUIVALENT ASTM LISTED MATERIALS IN SECTION A2.1 OF THE AISI SI00-07/S2-10, NORTH AMERICAN SPECIFICATION FOR THE DESIGN OF COLD-FORMED STEEL STRUCTURAL MEMBERS WITH SUPPLEMENT 2, DATED 2010, WITH A MINIMUM YIELD STRENGTH OF 33 KSI FOR 43 MIL (18 GAGE) AND LIGHTER AND MINIMUM YIELD STRENGTH OF 50 KSI FOR HEAVIER GAGES.

   METAL STUDS AND TRACKS SHALL BE OF SIZE, THICKNESS AND SECTION PROPERTIES SHOWN ON TABLES 1-1, 1-2 AND 1-3 OF THE AISI MANUAL, COLD-FORMED STEEL DESIGN, 2008 EDITION. THE RDP IN RESPONSIBLE CHARGE SHALL OBTAIN OSHPD APPROVAL FOR ANY SUBSTITUTIONS.

5. ELECTRICAL METALLIC TUBE (EMT) SHALL BE ANSI C80.3/UL 797 CARBON STEEL WITH G90 GALVANIZING. EMT SHALL HAVE MINIMUM YIELD STRENGTH OF (Fy =) 30 KSI AND MINIMUM ULTIMATE STRENGTH OF (Fu =) 48 KSI.

6. THESE OPD REFER TO FASTENER TYPE AND SIZE BUT DO NOT SPECIFY OR ENDORSE A SPECIFIC MANUFACTURER. THE RDP IN RESPONSIBLE CHARGE SHALL SELECT A MANUFACTURER AND SELECTED FASTENER CAPACITIES SHALL MATCH OR EXCEED THE STRENGTHS LISTED HEREIN. THE FOLLOWING REQUIREMENTS SHALL ALSO BE MET:

   a. SHEET METAL SCREWS SHALL COMPLY WITH ASTM C 1513-10, ASME B18.6.4-98 (R2005) AND ICC-ES AC 118 AND ALLOWABLE STRENGTH SHALL BE BASED ON INFORMATION PROVIDED IN CL1.31 AND CL1.32. PENETRATION OF SCREWS THROUGH JOINED MATERIAL SHALL NOT BE LESS THAN THREE EXPOSED THREADS.

   b. WELDING SHALL BE IN ACCORDANCE WITH AWS D1.3 USING E60XX SERIES ELECTRODES. FIELD WELDING SHALL HAVE SPECIAL INSPECTION IN ACCORDANCE WITH 2013 CBC SECTION 1705A.2.

   c. POST- INSTALLED ANCHORS (E.G. EXPANSION ANCHORS, SCREW ANCHORS AND POWER ACTUATED FASTENERS) SHALL HAVE SPECIAL INSPECTION AND TESTING IN ACCORDANCE WITH THE 2013 CBC SECTIONS 1705A.3 & 19.13A.7. FOR QUALIFICATION, DESIGN AND USE OF POST-INSTALLED ANCHORS IN CONCRETE SEE THE 2013 CBC SECTIONS 1616A.1.19 AND 1908A.1.1. LISTING OF CURRENT ICC-ES EVALUATION REPORTS (OR REPORTS FROM OTHER TESTING AGENCIES ACCEPTABLE TO OSHPD) SHALL BE REQUIRED FOR FASTENER USED.

   d. POWER-ACTUATED FASTENERS (PAF), POWDER DRIVEN FASTENERS (PDF), POWER DRIVEN PINS (PDP) AND SHOT PINS ALL REPRESENT THE SAME FASTENER AND WILL HEREAFTER BE REFERRED TO AS POWER ACTUATED FASTENERS (PAF). PAF'S SHALL SATISFY THE CURRENT AC70-ACCEPTANCE CRITERIA FOR FASTENERS POWER-DRIVEN INTO CONCRETE, STEEL AND MASONRY ELEMENTS AND THE 2013 CBC SECTION 1908A.1.1. LISTING OF CURRENT ICC ES EVALUATION REPORTS (OR REPORTS FROM OTHER TESTING AGENCIES ACCEPTABLE TO OSHPD) SHALL BE REQUIRED FOR FASTENERS USED.

   e. FOR PAF INSTALLED IN STEEL THE FASTENER PENETRATION SHALL HAVE THE ENTIRE POINTED END OF THE FASTENER DRIVEN THROUGH THE STEEL MEMBER, EXCEPT AS NOTED IN CURRENT REPORTS FROM TESTING AGENCIES ACCEPTABLE TO OSHPD.

Section Title : OSHPD STANDARD SUSPENDED CEILING DETAILS		OPD No:
Sheet Title : GENERAL NOTES - PAGE 1 OF 4		CL0.00

5/9/2017 9:06:03 AM

7. DESIGN CRITERIA

   a. BUILDING CODE: 2013 CALIFORNIA BUILDING CODE (2013 CBC), ASCE 7-10, AISI S100-07/S2-10, ASTM E580-14, C635-13a, AND C636-13. FOR LOAD COMBINATIONS, ALLOWABLE STRESS DESIGN SHALL BE IN ACCORDANCE WITH 2013 CBC SECTION 1605A.3.1.

   b. FASTENER CAPACITIES TABLES WERE DEVELOPED BASED ON ICC REPORTS BY SEVERAL MANUFACTURERS.

   c. THE DESIGN ASSUMES THAT BUILDING ELEMENTS AND SUPPORTS, TO WHICH THE COMPONENTS ADDRESSED IN THIS DOCUMENT ARE ANCHORED, HAVE SUFFICIENT CAPACITY TO CARRY THE LOADS IMPOSED BY THE COMPONENTS IN COMBINATION WITH ALL OTHER LOADS. EVALUATION OF THE CAPACITY OF THESE SUPPORTING BUILDING ELEMENTS IS BEYOND THE SCOPE OF THE OPD.

   d. THIS OPD IS LIMITED TO CEILING ASSEMBLIES HAVING MAXIMUM DEAD WEIGHT OF 4 PSF, INCLUDING LIGHTING FIXTURES (LUMINERIES) AND MECHANICAL SERVICES, EACH WEIGHING LESS THAN 56 LBS AND ATTACHED TO CEILING FRAMING SYSTEM. HEAVIER SYSTEM AND THOSE SUPPORTING LATERAL FORCES FROM PARTITION WALLS ARE OUTSIDE THE SCOPE OF THIS OPD AND WILL REQUIRE PROJECT SPECIFIC DESIGN.

8. THE RDP IN RESPONSIBLE CHARGE SHALL VERIFY THE FIRE RESISTENCE AND ACOUSTICAL RATINGS FOR ALL CEILING ASSEMBLIES.

9. "CEILING WIRE" SHALL CONFORM WITH GALVANIZED SOFT ANNEALED MILD STEEL WIRE AS DEFINED IN ASTM A641 (CLASS 1 COATING) WITH 70 KSI MINIMUM TENSILE STRENGTH:

   a. FOUR (4) TWISTS OF WIRE WITHIN 1.5" DEVELOPS THE ALLOWABLE LOAD FOR THE WIRE.

   b. THREE (3) TWISTS WITHIN 3" MAY BE USED TO DEVELOP THE MAXIMUM 50% OF ALLOWABLE LOAD.

10. SUSPENSION SYSTEM COMPONENTS SHALL COMPLY WITH ASTM C635 AND E580 SECTION 5.1:

   a. THE CEILING GRID SYSTEM SHALL BE RATED HEAVY DUTY AS DEFINED BY ASTM C635.

   b. HANGER AND BRACING WIRES SHALL BE #12 GAGE (0.106" DIAMETER), SOFT ANNEALED, AND GALVANIZED STEEL WIRES WITH CLASS 1 COATING. THEY MAY BE USED FOR UP TO AND INCLUDING 4'-0"x 4'-0" GRID SPACING ALONG AND ATTACHED TO MAIN RUNNERS. SPLICES ARE NOT PERMITTED IN ANY HANGER WIRE.

   c. MAIN RUNNERS AND CROSS RUNNERS ALONG WITH THEIR SPLICES, INTERSECTION CONNECTORS, AND EXPANSION DEVICES SHALL BE DESIGNED AND CONSTRUCTED TO CARRY A MEAN ULTIMATE TEST LOAD OF NOT LESS THAN 180 LBS. IN COMPRESSION & TENSION, IN ACCORDANCE WITH ASTM 580 SECTION 5.1.2.

11. SUSPENSION SYSTEM INSTALLATION, SHALL COMPLY WITH ASTM C636 AND E580 SECTION 5.2:

   a. PROVIDE #12 GAGE HANGER WIRES AT THE ENDS OF ALL MAIN AND CROSS RUNNERS WITHIN EIGHT (8) INCHES OF THE SUPPORT OR WITHIN ONE-FOURTH (1/4) OF THE LENGTH OF THE END TEE, WHICHEVER IS LESS, FOR THE PERIMETER OF THE CEILING AREA. PERIMETER WIRES ARE NOT REQUIRED WHEN THE LENGTH OF THE END TEE IS EIGHT (8) INCHES OR LESS.

   b. CEILING GRID MEMBERS SHALL BE ATTACHED TO TWO (2) ADJACENT WALLS, IN ACCORDANCE WITH ASTM E580 SECTION 5.2.3. CEILING GRID MEMBERS SHALL BE AT LEAST 3/4" INCH CLEAR OF OTHER WALLS. IF WALLS RUN DIAGONAL TO THE CEILING GRID SYSTEM RUNNERS, ONE END OF MAIN AND CROSS RUNNERS SHOULD BE FREE, AND A MINIMUM OF 3/4 INCH CLEAR OF WALL.

   c. THE WIDTH OF THE PERIMETER SUPPORTING CLOSURE ANGLE SHALL BE NOT LESS THAN TWO (2) INCHES. USE OF ANGLES WITH SMALLER WIDTHS IN CONJUNCTION WITH PERIMETER CLIPS SHALL REQUIRE AN ALTERNATE METHOD OF COMPLIANCE WITH ADEQUATE JUSTIFICATION AND ARE OUTSIDE THE SCOPE OF THIS OPD.

   d. AT THE PERIMETER OF THE CEILING AREA WHERE MAIN OR CROSS RUNNERS ARE NOT CONNECTED TO THE ADJACENT WALL, PROVIDE INTERCONNECTION BETWEEN THE RUNNERS AT THE FREE END TO PREVENT LATERAL SPREADING. A METAL STRUT OR A #16 GAGE WIRE WITH A POSITIVE MECHANICAL CONNECTION TO RUNNER MAY BE USED. WHERE THE PERPENDICULAR DISTANCE FROM THE WALL TO THE FIRST PARALLEL RUNNER IS EIGHT (8) INCHES OR LESS, THIS INTERCONNECTION IS NOT REQUIRED.

Section Title : OSHPD STANDARD SUSPENDED CEILING DETAILS		OPD No:
Sheet Title : GENERAL NOTES - PAGE 2 OF 4		CL0.01

5/9/2017 9:06:03 AM

12. EXPANSION JOINTS, SEISMIC SEPARATIONS, AND PENETRATIONS:

   a. EXPANSION JOINTS SHALL BE PROVIDED IN THE CEILING AT INTERSECTIONS OF CORRIDORS AND AT JUNCTIONS OF CORRIDORS WITH LOBBIES OR OTHER SIMILAR AREAS.

   b. FOR CEILING AREAS EXCEEDING 2500 SQUARE FEET, A SEISMIC SEPARATION JOINT SHALL BE PROVIDED TO DIVIDE THE CEILING INTO AREAS NOT EXCEEDING 2500 SQ. FT.

   c. PENETRATIONS THROUGH THE CEILING FOR SPRINKLER HEADS AND OTHER SIMILAR DEVICES THAT ARE NOT INTEGRALLY TIED TO THE CEILING SYSTEM IN THE LATERAL DIRECTION SHALL HAVE A TWO (2) INCH OVERSIZED RING, SLEEVE OR ADAPTER THROUGH THE CEILING TILE TO ALLOW FREE MOVEMENT OF ONE (1) INCH IN ALL HORIZONTAL DIRECTIONS. A FLEXIBLE SPRINKLER HOSE FITTING THAT CAN ACCOMMODATE ONE (1) INCH OF CEILING MOVEMENT SHALL BE PERMITTED TO BE USED IN LIEU OF THE OVERSIZED RING, SLEEVE OR ADAPTER. SUCH FLEXIBLE SPRINKLER HOSE SHALL BE ADEQUATELY SUPPORTED FROM SOFFIT SO AS NOT TO EXCEED THE MAXIMUM TRIBUTARY WEIGHT OF THE CEILING.

13. LATERAL FORCE BRACING:
   LATERAL FORCE BRACING IS REQUIRED IN ACCORDANCE WITH THIS SECTION FOR ALL CEILING AREAS, UON.

   EXCEPTION: LATERAL FORCE BRACING MAY BE OMITTED FOR SUSPENDED ACOUSTICAL CEILING SYSTEMS WITH A CEILING AREA OF 144 SQ. FT. OR LESS, WHEN PERIMETER SUPPORT IN ACCORDANCE WITH ASTM E580 ARE PROVIDED AND PERIMETER WALLS ARE DESIGNED TO CARRY THE CEILING LATERAL FORCES.

   a. PROVIDE LATERAL-FORCE BRACING ASSEMBLIES CONSISTING OF A STRUT AND FOUR (4) #12 GAGE BRACING WIRES ORIENTED 90 DEGREES FROM EACH OTHER.

   b. LATERAL-FORCE BRACING ASSEMBLIES SHALL BE SPACED IN ACCORDANCE WITH CL2.20 THROUGH CL2.22 AND CL2.30 FROM EACH WALL AND AT THE EDGES OF ANY CHANGE OF ELEVATION OF THE CEILING.

   c. THE SLOPE OF BRACING WIRES MAY BE FROM 10 TO 45 DEGREES BUT MAY NOT EXCEED 45 DEGREES FROM THE PLANE OF THE CEILING AND WIRES SHALL BE TAUT.

   d. STRUTS SHALL BE ADEQUATE TO RESIST THE VERTICAL COMPONENT INDUCED BY THE BRACING WIRES, AND SHALL NOT BE MORE THAN 1 (HORIZONTAL) IN 6 (VERTICAL) OUT OF PLUMB.

14. ATTACHMENT OF HANGER AND BRACING WIRES:

   a. FASTEN #12 HANGER WIRES WITH NOT LESS THAN THREE (3) TIGHT TURNS IN 3 INCHES. HANGER WIRE LOOPS SHALL BE TIGHTLY WRAPPED AND SHARPLY BENT TO PREVENT ANY VERTICAL MOVEMENT OR ROTATION OF THE MEMBER WITHIN THE LOOPS.

   b. FASTEN #12 BRACING WIRES WITH FOUR (4) TIGHT TURNS. MAKE ALL TIGHT TURNS WITHIN A DISTANCE OF 1 1/2" INCHES.

   c. HANGER OR BRACING WIRE ANCHORED TO THE STRUCTURE SHOULD BE INSTALLED IN SUCH A MANNER THAT THE DIRECTION OF THE ANCHOR ALIGNS AS CLOSELY AS POSSIBLE WITH THE DIRECTION OF THE WIRE.

   d. SEPARATE ALL CEILING HANGER AND BRACING WIRES AT LEAST SIX (6) INCHES FROM ALL UNBRACED DUCTS, PIPES CONDUITS, ETC.

   e. HANGER WIRES SHALL NOT BE ATTACHED TO OR BEND AROUND INTERFERING MATERIAL OR EQUIPMENT. PROVIDE TRAPEZE OR OTHER SUPPLEMETARY SUPPORT MEMBERS AT OBSTRUCTIONS TO TYPICAL HANGER SPACING. PROVIDE ADDITIONAL HANGERS, STRUTS OR BRACES AS REQUIRED AT ALL CEILING BREAKS, SOFFITS, OR DISCONTINUOUS AREAS.

   f. HANGER WIRES THAT ARE MORE THAN 1 (HORIZONTAL) IN 6 (VERTICAL) OUT OF PLUMB SHALL REQUIRE PROJECT SPECIFIC DESIGN.

   g. WHEN DRILLED-IN CONCRETE ANCHORS OR PAF ARE USED IN REINFORCED CONCRETE FOR HANGER WIRES, 1 OUT OF 10 WIRE/ ANCHOR ASSEMBLIES SHALL BE FIELD TESTED FOR 200 LBS. IN TENSION. WHEN DRILLED-IN CONCRETE ANCHORS ARE USED FOR BRACING WIRES, 1 OUT OF 2 WIREANCHOR ASSEMBLIES SHALL BE FIELD TESTED FOR 440 LBS. IN TENSION IN THE DIRECTION OF THE WIRE. PAF IN CONCRETE ARE NOT PERMITTED FOR BRACING WIRES.

Section Title : OSHPD STANDARD SUSPENDED CEILING DETAILS		OPD No:
Sheet Title : GENERAL NOTES - PAGE 3 OF 4		CL0.02

5/9/2017 9:06:03 AM

15. **CEILING FIXTURES, TERMINALS, AND DEVICES:**

   a. CEILING PANELS SHALL NOT SUPPORT ANY LIGHT FIXTURES, AIR TERMINALS/GRILLS, OR OTHER DEVICES (REFERRED TO ALL BY COMMON TERM FIXTURES HERE AFTER).

   b. ALL FIXTURES SHALL BE MOUNTED IN A MANNER THAT WILL NOT COMPROMISE CEILING PERFORMANCE.

   c. ALL FIXTURES SHALL BE ATTACHED TO THE SUSPENDED CEILING SYSTEM BY MECHANICAL MEANS, UNLESS INDEPENDENTLY SUPPORTED. THE ATTACHMENT DEVICE SHALL HAVE THE CAPACITY OF 100% OF FIXURE WEIGHT ACTING IN ANY DIRECTION. A MINIMUM OF TWO ATTACHMENT DEVICES ARE REQUIRED FOR EACH FIXTURE.

   d. SURFACE MOUNTED FIXTURES SHALL BE ATTACHED TO THE MAIN RUNNER WITH POSITIVE CLAMPING DEVICES MADE OF MATERIAL WITH A MINIMUM 14 GAGE. A NO.12 GAUGE SAFETY WIRES SHALL BE ATTACHED BETWEEN THE CLAMPING DEVICE AND TO THE STRUCTURE ABOVE. IN NO CASE SHALL THE FIXTURES EXCEED THE DESIGN CAPACITY OF THE SUPPORTING MEMBERS.

   e. ALL LIGHT FIXTURES WEIGHING LESS THAN OR EQUAL TO 10 LB. SHALL HAVE ONE NO. 12 GAUGE SAFETY WIRE CONNECTED FROM FIXURE HOUSING TO STRUCTURE ABOVE. IT IS NOT NECESSARY FOR THESE SAFETY WIRES TO BE TAUT.

   f. ALL FIXTURES WEIGHING GREATER THAN 10 LB BUT LESS THAN OR EQUAL TO 56 LB. SHALL HAVE TWO NO. 12 GAUGE SAFETY WIRE CONNECTED FROM FIXURE HOUSING TO STRUCTURE ABOVE. IT IS NOT NECESSARY FOR THESE SAFETY WIRES TO BE TAUT.

   g. ALL FIXTURES WEIGHING GREATER THAN 56 LB. SHALL BE SUPPORTED DIRECTLY FROM STRUCTURE ABOVE BY APPROVED HANGERS.

   h. PENDENT-HUNG FIXTURES SHALL BE SUPPORTED DIRECTLY FROM THE STRUCTURE ABOVE USING NO LESS THAN NO. 9-GAUGE WIRE OR AN APPROVED ALTERNATE SUPPORT. THE CEILING SUSPENSION SYSTEM SHALL NOT PROVIDE ANY DIRECT SUPPORT.

   i. ALL RECESSED OR DROP-IN FIXTURES SHALL BE SUPPORTED DIRECTLY FROM FIXTURE HOUSING TO THE STRUCTURE ABOVE WITH A MINIMUM OF TWO NO. 12 GAUGE WIRES LOCATED AT DIAGONALLY OPPOSITE CORNERS. LEVELLING OR POSITIONING OF FIXTURES MAY BE PROVIDED BY CEILING GRID. FIXTURE SUPPORT WIRES MAY BE SLIGHTLY LOOSE TO ALLOW THE FIXTURE TO SEAT IN THE GRID SYSTEM. FIXTURES SHALL NOT BE SUPPORTED FROM MAIN RUNNERS OR CROSS RUNNERS IF THE WEIGHT OF THE FIXTURES CAUSES TOTAL DEAD LOAD TO EXCEED THE DEFLECTION CAPABILITY OF THE CEILING SUSPENSION SYSTEM.

16. **ADDITIONAL REQUIREMENTS:**

   a. CEILINGS THAT ARE PART OF A FIRE RATED ASSEMBLY: PROVIDE A DETAIL AND DESIGN NUMBER FOR RATED CEILING ASSEMBLIES FROM AN APPROVED TESTING AGENCY. THE COMPONENTS AND INSTALLATION DETAILS CONFORM IN EVERY RESPECT WITH THE LISTED DETAIL AND NUMBER. DETAILS SHALL CLEARLY DEPICT ALL COMPONENTS, INCLUDING INSULATION MATERIALS, FRAMING AND ATTACHMENT OF THE DESIGN SO THAT THE ASSEMBLY CAN BE CONSTRUCTED AND INSPECTED ACCORDINGLY. POP RIVETS, SCREWS, OR OTHER ATTACHMENTS ARE NOT ACCEPTABLE UNLESS SPECIFICALLY DETAILED ON THE DRAWINGS AND APPROVED BY APPROVED TESTING AGENCY.

   b. METAL AND OTHER PANELS: METAL PANELS AND PANELS WEIGHING MORE THAN 1/2 PSF, OTHER THAN MINERAL FIBER ACOUSTICAL TILE, ARE TO BE POSITIVELY ATTACHED TO THE CEILING SUSPENSION RUNNERS.

   c. BUILDING EXIT WAYS: CEILINGS IN EXIT WAYS SHALL BE INSTALLED IN ACCORDANCE WITH SECTION 13.5.6.2.2(1) OF ASCE 7-10 AS AMENDED BY 2013 CBC SECTION 1616A.1.20. SPLICES OR INTERSECTION OF RUNNERS SHALL BE ATTACHED WITH THROUGH CONNECTORS SUCH AS POP RIVETS, SCREWS, PINS, PLATES WITH END TABS OR OTHER APPROVED CONNECTORS.

Section Title : OSHPD STANDARD SUSPENDED CEILING DETAILS		OPD No:
Sheet Title : GENERAL NOTES - PAGE 4 OF 4		CL0.03

5/9/2017 9:06:06 AM

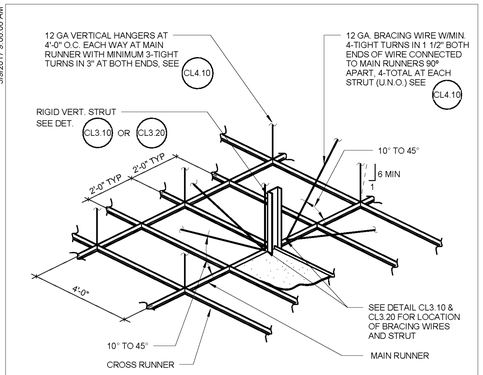

NOTES:

1. SEE SUSPENDED CEILING NOTES #13 & #14 ON CL0.02
2. STRUTS SHALL NOT REPLACE HANGER WIRES.
3. FOR CONDITIONS AT CORRIDOR SEE DRAWING NO. CL2.30

Section Title : OSHPD STANDARD SUSPENDED CEILING DETAILS		OPD No:
Sheet Title : SUSPENDED CEILING BRACING ASSEMBLY		CL2.10

5/9/2017 9:06:06 AM

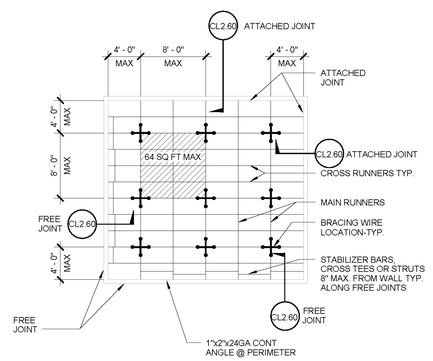

NOTES:

1. BRACING WIRES AND COMP. STRUT SHALL OCCUR AT EVERY 64 SQ. FT. MAX. IN ROOMS OVER 64 SQ. FT.
2. RDP MAY ELECT TO SPECIFY TIGHTER SPACING BETWEEN BRACING WIRES AND COMP. STRUTS TO ALLOW SMALLER ANCHORS PER SCHEDULES ON SHEETS CL4.31 & CL6.60.

Section Title : OSHPD STANDARD SUSPENDED CEILING DETAILS		OPD No:
Sheet Title : TYPICAL CEILING PLAN FOR $1.73 < S_{DS} \leq 2.50$ AND z/h <= 1.0		CL2.20

5/9/2017 9:06:07 AM

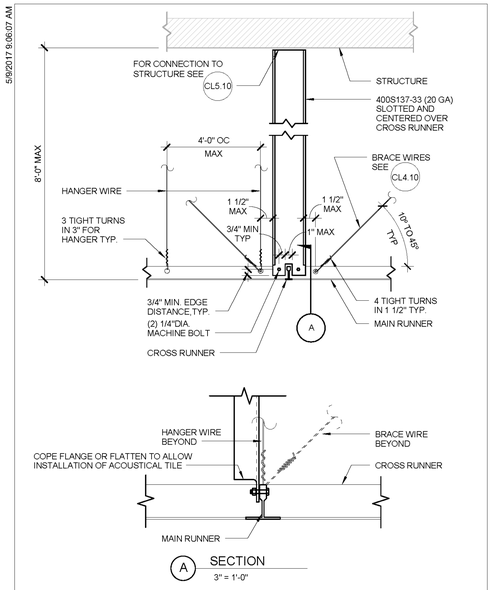

Section Title : OSHPD STANDARD SUSPENDED CEILING DETAILS		OPD No:
Sheet Title : SUSPENDED ACOUSTICAL CEILING - CHANNEL TYPE STRUT		CL3.10

5/9/2017 9:06:07 AM

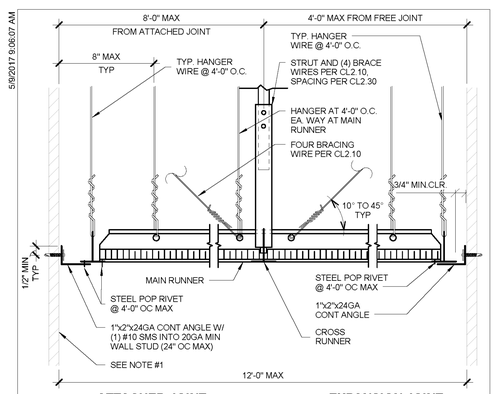

ATTACHED JOINT **EXPANSION JOINT**

ACCEPTABLE EXITWAY DETAILS

NOTES:

1. PERIMETER WALLS SHALL BE DESIGNED TO CARRY TRIBUTARY LATERAL FORCES PER TABLE BELOW. RDP TO VERIFY. RDP TO SPECIFY CONNECTION OF BACKING TO STUDS

S_{DS}	Fp
$S_{DS} \leq 1.15$	9.3 plf
$1.15 < S_{DS} \leq 1.73$	14.0 plf
$1.73 < S_{DS} \leq 2.50$	20.9 plf

2. SEISMIC BRACING WIRES AND STRUTS IN ACCORDANCE WITH PAGES CL2.20, CL2.21, AND CL2.22 SHALL BE PERMITTED IN LIEU OF DESIGNING PERIMETER WALLS FOR SEISMIC FORCES AND BRACING SYSTEM SHOWN ON PAGE CL2.30 AND THIS PAGE.
3. STEEL POP RIVET SHALL HAVE MINIMUM ALLOWABLE SHEAR STRENGTH OF 120# AND ULTIMATE SHEAR STRENGTH OF 300#.

Section Title : OSHPD STANDARD SUSPENDED CEILING DETAILS		OPD No:
Sheet Title : TYPICAL CEILING SECTION AT EXITWAY CORRIDORS		CL2.50

PROJECT MANAGEMENT

ALAMEIDA ARCHITECTURE

CONSTRUCTION MANAGEMENT

555 S. MAIN STREET, SUITE 2
SEBASTOPOL, CA 95472
(707) 824-1219
WWW.ALAMEIDA.COM

COUNTY OF HUMBOLDT — The Home of the Redwoods

PROJECT

TENANT IMPROVEMENTS FOR ECONOMIC DEVELOPMENT AND CHILD SUPPORT SERVICES

2420 6TH STREET
EUREKA, CA

REGISTERED ARCHITECT — DONALD R. ALAMEIDA — C-19767 — Exp. 11/30/23 — STATE OF CALIFORNIA

No.	Description	Date
1.	PLAN CHECK COMMENTS	12/12/22

SUSPENDED CEILING LAYOUT AND DETAILS

Project number	2108
Date	5/8/22
Drawn by	Author
Checked by	Checker

A-7.0

Scale

5/2/2023 4:54:51 PM

5/9/2017 9:06:10 AM

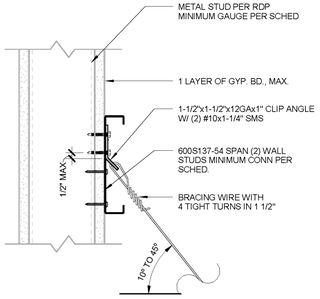

WALL STUD GAUGE	CONN TO WALL STUD	CONN TO WALL STUD ALT [3]
20 GA	(5) #10x1-1/4" SMS	(3) #10x1-1/4" SMS
18 GA	(4) #10x1-1/4" SMS	(2) #10x1-1/4" SMS

NOTES:

1. RDP SHALL DESIGN FRAMING WALL TO CARRY THE CEILING LOAD PER NOTE #2.
2. SEISMIC BRACE WIRE FORCE = 473 LBS (LRFD LOAD). BRACING WIRE SHALL HAVE A MINIMUM STRETCH LENGTH (CLR LENGTH BTWN TURNS) OF 12", WHEN USED AT FREE JOINT.
3. APPLIES WHERE CLIP ATTACHED DIRECTLY TO WALL STUD.

Section Title: OSHPD STANDARD SUSPENDED CEILING DETAILS
Sheet Title: BRACING WIRE CONNECTION TO METAL STUD WALL
OPD No: CL4.35

5/9/2017 9:06:09 AM

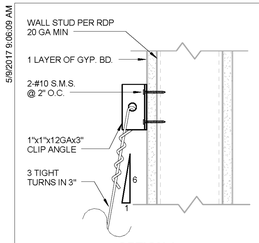

OPTION 1

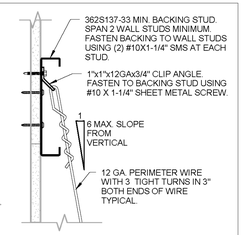

OPTION 2

NOTES:

1. THIS IS APPLIED FOR PERIMETER WIRE ATTACHEMENT OR WHERE OBSTRUCTION PREVENTS ATTACHMENT TO STRUCTURE ABOVE
2. RDP SHALL DESIGN FRAMING WALL TO CARRY THE CEILING LOAD. SEE TABLE BELOW FOR LOADS. LOADS ASSUME A TRIBUTARY AREA OF 16 SQ FT AND ARE UNFACTORED.
3. WALLS SHALL BE DESIGNED FOR HANGER FORCES BELOW. AT FREE JOINT, HANGER WIRE SHALL HAVE A MINIMUM STRETCH LENGTH (CLR LENGTH BTWN TURNS) OF12"

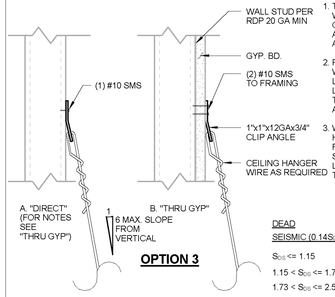

OPTION 3

HANGER FORCES

	VERTICAL	HORIZONTAL
DEAD	64 LBS	11 LBS
SEISMIC (0.14S_{DS} Wp)		
S_{DS} <= 1.15	11 LBS	2 LBS
1.15 < S_{DS} <= 1.73	16 LBS	3 LBS
1.73 < S_{DS} <= 2.50	23 LBS	4 LBS

Section Title: OSHPD STANDARD SUSPENDED CEILING DETAILS
Sheet Title: HANGER WIRE CONNECTION TO METAL STUD WALL
OPD No: CL4.25

5/9/2017 9:06:08 AM

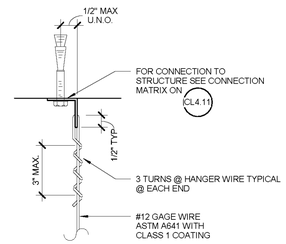

HANGER WIRE

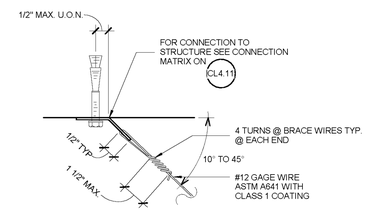

BRACING WIRE

Section Title: OSHPD STANDARD SUSPENDED CEILING DETAILS
Sheet Title: HANGER AND BRACING WIRE CONNECTION - TYPICAL WIRE TURNS
OPD No: CL4.10

5/9/2017 9:06:07 AM

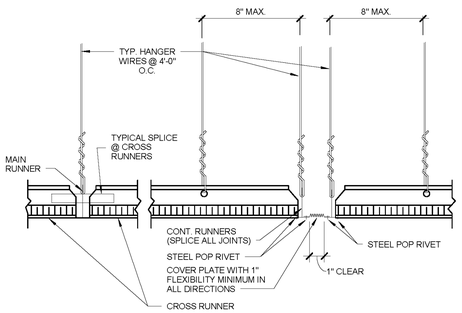

RUNNER SPLICE **EXPANSION JOINT**

EXPANSION JOINT AT INTERSECTION OF CORRIDORS, JUNCTIONS OF CORRIDORS AND LOBBIES, SIMILAR AREAS AND CEILING OVER 2500 SFT

Section Title: OSHPD STANDARD SUSPENDED CEILING DETAILS
Sheet Title: SUSPENDED ACOUSTICAL CEILING - EXPANSION JOINT AT INTERSECTIONS
OPD No: CL2.40

5/9/2017 9:06:10 AM

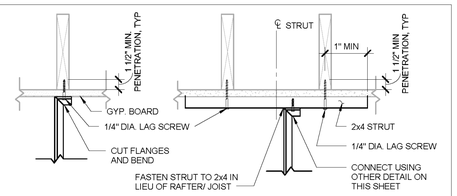

OPTION 1 **OPTION 2**

CHANNEL STRUT

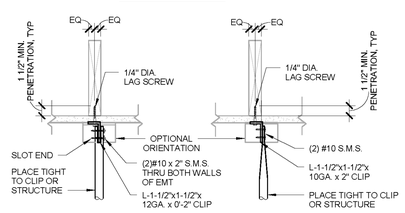

OPTION 1 **OPTION 2**

TUBE STRUT

NOTES:

1. FRAMING MEMBERS MUST BE DESIGNED TO CARRY THE CEILING LOADS, RDP TO VERIFY.
2. RDP SHALL VERIFY THAT SCREWS AT THE BOTTOM FLANGE OF TRUSS IS ACCEPTABLE
3. SEE PAGES CL5.20 & CL5.30 FOR ADDITIONAL INFORMATION

Section Title: OSHPD STANDARD SUSPENDED CEILING DETAILS
Sheet Title: STRUT CONNECTION TO SAWN TIMBER WITH GYPSUM BOARD
OPD No: CL5.50

5/9/2017 9:06:09 AM

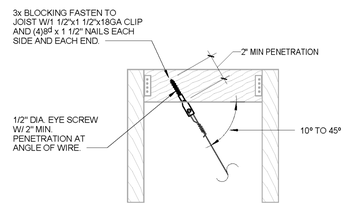

BRACING WIRE

NOTES:

1. FRAMING MEMBERS SHALL BE DESIGNED TO CARRY THE CEILING LOADS, RDP TO VERIFY
2. RDP SHALL VERIFY THAT SCREWS AT THE BOTTOM FLANGE OF TRUSS IS ACCEPTABLE

Section Title: OSHPD STANDARD SUSPENDED CEILING DETAILS
Sheet Title: BRACING WIRE CONNECTION TO SAWN TIMBER
OPD No: CL4.34

5/9/2017 9:06:09 AM

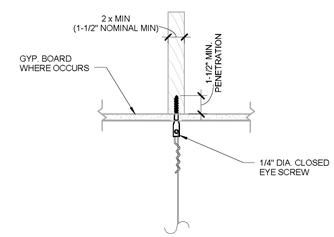

HANGER WIRE

NOTES:

1. FRAMING MEMBERS SHALL BE DESIGNED TO CARRY THE CEILING LOADS, RDP TO VERIFY
2. RDP SHALL VERIFY THAT SCREWS AT THE BOTTOM FLANGE OF TRUSS IS ACCEPTABLE

Section Title: OSHPD STANDARD SUSPENDED CEILING DETAILS
Sheet Title: HANGER WIRE CONNECTION TO SAWN TIMBER
OPD No: CL4.24

PROJECT MANAGEMENT
ALAMEIDA ARCHITECTURE
CONSTRUCTION MANAGEMENT
555 S. MAIN STREET, SUITE 2
SEBASTOPOL, CA 95472
(707) 824-1219
WWW.ALAMEIDA.COM

PROJECT

TENANT IMPROVEMENTS FOR ECONOMIC DEVELOPMENT AND CHILD SUPPORT SERVICES

2420 6TH STREET
EUREKA, CA

REGISTERED ARCHITECT
GONALO R. ALAMEIDA
C-19767
Exp. 11/30/23
STATE OF CALIFORNIA

No.	Description	Date
1.	PLAN CHECK COMMENTS	12/12/22

SUSPENDED ACOUSTICAL CEILING DETAILS

Project number	2108
Date	5/8/22
Drawn by	DRA
Checked by	DRA

A-7.1

Scale

5/22/2023 4:54:55 PM

5/6/2017 9:07:19 AM

SUSPENDED GYP BOARD CEILING
GENERAL NOTES

1. CONSTRUCTION, WORKMANSHIP AND MATERIAL SHALL CONFORM TO THE 2013 CALIFORNIA BUILDING STANDARDS CODE (CBSC 2013).

2. THE CONTRACTOR SHALL NOTIFY OSHPD AND THE REGISTERED DESIGN PROFESSIONAL (RDP) IN RESPONSIBLE CHARGE WHERE A CONFLICT OR DISCREPANCY OCCURS BETWEEN THE CONSTRUCTION DRAWINGS AND ANY OTHER PORTION OF THE CONSTRUCTION DOCUMENTS, FIELD CONDITIONS, OR WHERE ANY CONDITIONS ARISE NOT COVERED BY THESE DOCUMENTS WHEREIN WORK WILL NOT COMPLY WITH CODE REQUIREMENTS.

3. THE INTENT OF THE DRAWINGS AND SPECIFICATIONS IS TO CONSTRUCT THE HOSPITAL BUILDING IN ACCORDANCE WITH THE CALIFORNIA BUILDING STANDARD CODE, 2013 (CBSC 2013). SHOULD ANY CONDITION DEVELOP NOT COVERED BY THE APPROVED CONSTRUCTION DOCUMENTS WHEREIN THE WORK WILL NOT COMPLY WITH CBSC 2013, A CHANGE ORDER DETAILING AND SPECIFYING THE REQUIRED WORK SHALL BE SUBMITTED TO AND APPROVED BY OSHPD BEFORE PROCEEDING WITH THE WORK.

4. GALVANIZED METAL STUDS, TRACKS AND SHEET STEEL SHALL CONFORM TO ASTM A653-11 MATERIAL, OR OTHER EQUIVALENT ASTM LISTED MATERIALS IN SECTION A2.1 OF THE AISI SI00-07/S2-10, NORTH AMERICAN SPECIFICATION FOR THE DESIGN OF COLD-FORMED STEEL STRUCTURAL MEMBERS WITH SUPPLEMENT 2, DATED 2010, WITH A MINIMUM YIELD STRENGTH OF 33 KSI FOR 43 MIL (18 GAGE) AND LIGHTER AND MINIMUM YIELD STRENGTH OF 50 KSI FOR HEAVIER GAGES.

   METAL STUDS AND TRACKS SHALL BE OF SIZE, THICKNESS AND SECTION PROPERTIES SHOWN ON TABLES 1-1, 1-2 AND 1-3 OF THE AISI MANUAL, COLD-FORMED STEEL DESIGN, 2008 EDITION. THE RDP IN RESPONSIBLE CHARGE SHALL OBTAIN OSHPD APPROVAL FOR ANY SUBSTITUTIONS.

5. ELECTRICAL METALLIC TUBE (EMT) SHALL BE ANSI C80.3/UL 797 CARBON STEEL WITH G90 GALVANIZING. EMT SHALL HAVE MINIMUM YIELD STRENGTH OF (Fy =) 30 KSI AND MINIMUM ULTIMATE STRENGTH OF (Fu =) 48 KSI.

6. THESE OPD REFER TO FASTENER TYPE AND SIZE BUT DO NOT SPECIFY OR ENDORSE A SPECIFIC MANUFACTURER. THE RDP IN RESPONSIBLE CHARGE SHALL SELECT A MANUFACTURER AND SELECTED FASTENER CAPACITIES SHALL MATCH OR EXCEED THE STRENGTHS LISTED HEREIN. THE FOLLOWING REQUIREMENTS SHALL ALSO BE MET:

   a. SHEET METAL SCREWS SHALL COMPLY WITH ASTM C 1513-10, ASME B18.6.4-98 (R2005) AND ICC-ES AC 118 AND ALLOWABLE STRENGTH SHALL BE BASED ON INFORMATION PROVIDED IN CG1.31 AND CG1.32. PENETRATION OF SCREWS THROUGH JOINED MATERIAL SHALL NOT BE LESS THAN THREE EXPOSED THREADS.

   b. WELDING SHALL BE IN ACCORDANCE WITH AWS D1.3 USING E60XX SERIES ELECTRODES. FIELD WELDING SHALL HAVE SPECIAL INSPECTION IN ACCORDANCE WITH 2013 CBC SECTION 1705A.2.

   c. POST- INSTALLED ANCHORS (E.G. EXPANSION ANCHORS, SCREW ANCHORS AND POWER ACTUATED FASTENERS) SHALL HAVE SPECIAL INSPECTION AND TESTING IN ACCORDANCE WITH THE 2013 CBC SECTIONS 1705A.3 & 1913A.7. FOR QUALIFICATION, DESIGN AND USE OF POST-INSTALLED ANCHORS IN CONCRETE SEE THE 2013 CBC SECTIONS 1616A.1.19 AND 1908A.1.1. LISTING OF CURRENT ICC-ES EVALUATION REPORTS (OR REPORTS FROM OTHER TESTING AGENCIES ACCEPTABLE TO OSHPD) SHALL BE REQUIRED FOR FASTENER USED.

   d. POWER-ACTUATED FASTENERS (PAF), POWDER DRIVEN FASTENERS (PDF), POWER DRIVEN PINS (PDP) AND SHOT PINS ALL REPRESENT THE SAME FASTENER AND WILL HEREAFTER BE REFERRED TO AS POWER ACTUATED FASTENERS (PAF). PAF'S SHALL SATISFY THE CURRENT AC70-ACCEPTANCE CRITERIA FOR FASTENERS POWER-DRIVEN INTO CONCRETE, STEEL AND MASONRY ELEMENTS AND THE 2013 CBC SECTIONS 1908A.1.1. LISTING OF CURRENT ICC ES EVALUATION REPORTS (OR REPORTS FROM OTHER TESTING AGENCIES ACCEPTABLE TO OSHPD) SHALL BE REQUIRED FOR FASTENERS USED.

   e. FOR PAF INSTALLED IN STEEL THE FASTENER PENETRATION SHALL HAVE THE ENTIRE POINTED END OF THE FASTENER DRIVEN THROUGH THE STEEL MEMBER, EXCEPT AS NOTED IN CURRENT REPORTS FROM TESTING AGENCIES ACCEPTABLE TO OSHPD.

Section Title : OSHPD STANDARD GYPSUM BOARD CEILING DETAILS	OPD No:
Sheet Title : GYP-BOARD SUSPENDED CEILING PAGE 1 OF 5	CG0.00

5/6/2017 9:07:19 AM

7. DESIGN CRITERIA

   a. BUILDING CODE: 2013 CALIFORNIA BUILDING CODE (2013 CBC), ASCE 7-10, AISI S100-07/S2-10, AND ASTM C754-11. FOR LOAD COMBINATIONS, ALLOWABLE STRESS DESIGN SHALL BE IN ACCORDANCE WITH 2013 CBC SECTION 1605A.3.1.

   b. FASTENER CAPACITIES TABLES WERE DEVELOPED BASED ON ICC REPORTS BY SEVERAL MANUFACTURERS.

   c. THE DESIGN ASSUMES THAT BUILDING ELEMENTS AND SUPPORTS, TO WHICH THE COMPONENTS ADDRESSED IN THIS DOCUMENT ARE ANCHORED, HAVE SUFFICIENT CAPACITY TO CARRY THE LOADS IMPOSED BY THE COMPONENTS IN COMBINATION WITH ALL OTHER LOADS. EVALUATION OF THE CAPACITY OF THESE SUPPORTING BUILDING ELEMENTS IS BEYOND THE SCOPE OF THE OPD.

   d. THIS OPD IS LIMITED TO CEILING ASSEMBLIES HAVING MAXIMUM DEAD WEIGHT OF 4 PSF, INCLUDING LIGHTING FIXTURES (LUMINERIES) AND MECHANICAL SERVICES, EACH WEIGHING LESS THAN 56 LBS AND ATTACHED TO CEILING FRAMING SYSTEM. HEAVIER SYSTEM AND THOSE SUPPORTING LATERAL FORCES FROM PARTITION WALLS ARE OUTSIDE THE SCOPE OF THIS OPD AND WILL REQUIRE PROJECT SPECIFIC DESIGN.

8. THE RDP IN RESPONSIBLE CHARGE SHALL VERIFY THE FIRE RESISTENCE AND ACOUSTICAL RATINGS FOR ALL CEILING ASSEMBLIES.

9. "CEILING WIRE" SHALL CONFORM WITH GALVANIZED SOFT ANNEALED MILD STEEL WIRE AS DEFINED IN ASTM A641 (CLASS 1 COATING) WITH 70 KSI MINIMUM TENSILE STRENGTH:

   a. FOUR (4) TWISTS OF WIRE WITHIN 1.5" DEVELOPS THE ALLOWABLE LOAD FOR THE WIRE.

   b. THREE (3) TWISTS WITHIN 3" MAY BE USED TO DEVELOP THE MAXIMUM 50% OF ALLOWABLE LOAD.

10. SUSPENSION SYSTEM COMPONENTS SHALL COMPLY WITH ASTM C754:

   a. MAIN RUNNNERS SHALL CONSIST OF 16 GAGE 1-1/2" COLD ROLLED U-CHANNEL 150U050-54 SPACED AT 4'-0" OC MAX. MAIN RUNNERS SHALL BE SUPPORTED BY HANGER WIRES AT 4'-0" OC MAX AND WITHIN 6" FROM EA END.

   b. FURRING CHANNEL SHALL CONSIST OF 25 GAGE 7/8" (HAT) FURRING CHANNELS (087F125-18) at 2'-0" OC MAX. FURRING CHANNELS SHALL BE SADDLE TIED TO MAIN RUNNERS WITH 16 GAGE TIE WIRE OR A DOUBLE STRAND OF 18 GAGE TIE WIRE.

   c. MAIN RUNNERS SHALL BE SPLICED BY LAPPING IN ACCORDANCE WITH CG2.31.

   d. FURRING CHANNELS SHALL BE SPLICED BY LAPPING IN ACCORDANCE WITH CG2.31.

   e. MAIN RUNNERS AND FURRING CHANNELS ALONG WITH THEIR SPLICES, INTERSECTION CONNECTORS, AND EXPANSION DEVICES SHALL BE DESIGNED AND CONSTRUCTED TO CARRY A MEAN ULTIMATE TEST LOAD OF NOT LESS THAN 270 LBS. IN COMPRESSION & TENSION.

   f. HANGER AND BRACING WIRES SHALL BE #12 GAGE (0.106" DIAMETER), SOFT ANNEALED, AND GALVANIZED STEEL WIRES WITH CLASS 1 COATING. THEY MAY BE USED FOR UP TO AND INCLUDING 4'-0"x 4'-0" GRID SPACING ALONG AND ATTACHED TO MAIN RUNNERS. SPLICES ARE NOT PERMITTED IN ANY HANGER WIRE.

   g. WIRE HANGERS SHALL BE SADDLE-TIED AROUND MAIN RUNNERS SO AS TO PREVENT TURNING OR TWISING OF THE MEMBER.

11. SUSPENSION SYSTEM INSTALLATION SHALL COMPLY WITH ASTM C754:

   a. CEILING GRID MEMBERS SHALL BE ATTACHED TO TWO (2) ADJACENT WALLS. MAIN RUNNERS AND FURRING CHANNEL SHALL BE AT LEAST 1 INCH CLEAR OF OTHER WALL. IF WALLS RUN DIAGONAL TO THE CEILING GRID SYSTEM RUNNERS, ONE END OF MAIN RUNNER AND FURRING SHOULD BE FREE WITH STANDARD CLEARANCES.

   b. THE WIDTH OF THE PERIMETER SUPPORTING CLOSURE ANGLE SHALL BE NOT LESS THAN TWO (2) INCHES. USE OF ANGLES WITH SMALLER WIDTHS IN CONJUNCTION WITH PERIMETER CLIPS SHALL REQUIRE AN ALTERNATE METHOD OF COMPLIANCE WITH ADEQUATE JUSTIFICATION AND ARE OUTSIDE THE SCOPE OF THIS OPD.

Section Title : OSHPD STANDARD GYPSUM BOARD CEILING DETAILS	OPD No:
Sheet Title : GYP-BOARD SUSPENDED CEILING PAGE 2 OF 5	CG0.01

5/6/2017 9:07:20 AM

12. EXPANSION JOINTS, SEISMIC SEPARATIONS, AND PENETRATIONS:

   a. EXPANSION JOINTS SHALL BE PROVIDED IN THE CEILING AT INTERSECTIONS OF CORRIDORS AND AT JUNCTIONS OF CORRIDORS WITH LOBBIES OR OTHER SIMILAR AREAS.

   b. FOR CEILING AREAS EXCEEDING 2500 SQUARE FEET, A SEISMIC SEPARATION JOINT SHALL BE PROVIDED TO DIVIDE THE CEILING INTO AREAS NOT EXCEEDING 2500 SQ. FT.

   c. PENETRATIONS THROUGH THE CEILING FOR SPRINKLER HEADS AND OTHER SIMILAR DEVICES THAT ARE NOT INTEGRALLY TIED TO THE CEILING SYSTEM IN THE LATERAL DIRECTION SHALL HAVE A TWO (2) INCH OVERSIZED RING, SLEEVE OR ADAPTER THROUGH THE CEILING TILE TO ALLOW FREE MOVEMENT OF ONE (1) INCH IN ALL HORIZONTAL DIRECTIONS. A FLEXIBLE SPRINKLER HOSE FITTING THAT CAN ACCOMMODATE ONE (1) INCH OF CEILING MOVEMENT SHALL BE PERMITTED TO BE USED IN LIEU OF THE OVERSIZED RING, SLEEVE OR ADAPTER. SUCH FLEXIBLE SPRINKLER HOSE SHALL BE ADEQUATELY SUPPORTED FROM SOFFIT SO AS NOT TO EXCEED THE MAXIMUM TRIBUTARY WEIGHT OF THE CEILING.

13. LATERAL FORCE BRACING:

   LATERAL FORCE BRACING IS REQUIRED IN ACCORDANCE WITH THIS SECTION FOR ALL CEILING AREAS, UON.

   EXCEPTION: LATERAL FORCE BRACING MAY BE OMITTED FOR SUSPENDED ACOUSTICAL CEILING SYSTEMS WITH A CEILING AREA OF 144 SQ. FT. OR LESS, WHEN PERIMETER SUPPORT ARE PROVIDED AND PERIMETER WALLS ARE DESIGNED TO CARRY THE CEILING LATERAL FORCES.

   a. PROVIDE LATERAL-FORCE BRACING ASSEMBLIES CONSISTING OF A STRUT AND FOUR (4) #12 GAGE BRACING WIRES ORIENTED 90 DEGREES FROM EACH OTHER.

   b. LATERAL-FORCE BRACING ASSEMBLIES SHALL BE SPACED IN ACCORDANCE WITH CG2.20 THROUGH CG2.22 AND CG2.30 FROM EACH WALL AND AT THE EDGES OF ANY CHANGE OF ELEVATION OF THE CEILING.

   c. THE SLOPE OF BRACING WIRES MAY BE FROM 10 TO 45 DEGREES BUT MAY NOT EXCEED 45 DEGREES FROM THE PLANE OF THE CEILING AND WIRES SHALL BE TAUT.

   d. STRUTS SHALL BE ADEQUATE TO RESIST THE VERTICAL COMPONENT INDUCED BY THE BRACING WIRES, AND SHALL NOT BE MORE THAN 1 (HORIZONTAL) IN 6 (VERTICAL) OUT OF PLUMB.

14. ATTACHMENT OF HANGER AND BRACING WIRES:

   a. FASTEN #12 HANGER WIRES WITH NOT LESS THAN THREE (3) TIGHT TURNS IN 3 INCHES. HANGER WIRE LOOPS SHALL BE TIGHTLY WRAPPED AND SHARPLY BENT TO PREVENT ANY VERTICAL MOVEMENT OR ROTATION OF THE MEMBER WITHIN THE LOOPS.

   b. FASTEN #12 BRACING WIRES WITH FOUR (4) TIGHT TURNS. MAKE ALL TIGHT TURNS WITHIN A DISTANCE OF 1 1/2" INCHES.

   c. HANGER OR BRACING WIRE ANCHORED TO THE STRUCTURE SHOULD BE INSTALLED IN SUCH A MANNER THAT THE DIRECTION OF THE ANCHOR ALIGNS AS CLOSELY AS POSSIBLE WITH THE DIRECTION OF THE WIRE.

   d. SEPARATE ALL CEILING HANGER AND BRACING WIRES AT LEAST SIX (6) INCHES FROM ALL UNBRACED DUCTS, PIPES CONDUITS, ETC.

   e. HANGER WIRES SHALL NOT BE ATTACHED TO OR BEND AROUND INTERFERING MATERIAL OR EQUIPMENT. PROVIDE TRAPEZE OR OTHER SUPPLEMETARY SUPPORT MEMBERS AT OBSTRUCTIONS TO TYPICAL HANGER SPACING. PROVIDE ADDITIONAL HANGERS, STRUTS OR BRACES AS REQUIRED AT ALL CEILING BREAKS, SOFFITS, OR DISCONTINUOUS AREAS.

   f. HANGER WIRES THAT ARE MORE THAN 1 (HORIZONTAL) IN 6 (VERTICAL) OUT OF PLUMB SHALL REQUIRE PROJECT SPECIFIC DESIGN.

   g. WHEN DRILLED-IN CONCRETE ANCHORS OR PAF ARE USED IN REINFORCED CONCRETE FOR HANGER WIRES, 1 OUT OF 10 WIRE/ANCHOR ASSEMBLIES SHALL BE FIELD TESTED FOR 200 LBS. IN TENSION. WHEN DRILLED-IN CONCRETE ANCHORS ARE USED FOR BRACING WIRES, 1 OUT OF 2 WIRE/ ANCHOR ASSEMBLIES SHALL BE FIELD TESTED FOR 440 LBS. IN TENSION IN THE DIRECTION OF THE WIRE. PAF IN CONCRETE ARE NOT PERMITTED FOR BRACING WIRES.

Section Title : OSHPD STANDARD GYPSUM BOARD CEILING DETAILS	OPD No:
Sheet Title : GYP-BOARD SUSPENDED CEILING PAGE 3 OF 5	CG0.02

5/6/2017 9:07:20 AM

15. CEILING FIXTURES, TERMINALS, AND DEVICES:

   a. ALL LIGHT FIXTURES, AIR TERMINALS/GRILLS, OR OTHER DEVICES (REFERRED TO ALL BY COMMON TERM FIXTURES HEREAFTER) SHALL BE MOUNTED IN A MANNER THAT WILL NOT COMPROMISE CEILING PERFORMANCE.

   b. ALL FIXTURES SHALL BE SUPPORTED DIRECTLY BY MAIN RUNNERS OR BY SUPPLEMENTAL FRAMING WHICH IS SUPPORTED BY MAIN RUNNERS AND POSITIVELY ATTACHED WITH SCREWS OR OTHER APPROVED CONNECTORS.

   c. SURFACE MOUNTED FIXTURES SHALL BE ATTACHED TO A MAIN RUNNER WITH A POSITIVE CLAMPING DEVICE MADE OF MATERIAL WITH A MINIMUM OF 14 GAGE. ROTATIONAL SPRING CLAMPS DO NOT COMPLY.

   d. ACCESS PANELS: ACCESS TO THE SPACE BETWEEN THE CEILING AND THE FLOOR OR ROOF ABOVE SHALL NOT BE ALLOWED. SMALL ACCESS PANELS FOR THE INSPECTION, ADJUSTMENT, OR REPAIR OF UTILITY SWITCHES, VALVES, SENSORS, ETC. MAY BE ALLOWED IF THE PANEL IS LESS THAN 300 SQUARE INCHES. SUCH PANELS SHALL ALSO HAVE A PERMANENT WARNING LABEL AS FOLLOWS:

   WARNING: 1. DO NOT CLIMB, WALK, OR CRAWL ON THE GYPSUM BOARD CEILING.
   2. DO NOT STORE OR STOW ANYTHING ON THE GYPSUM BOARD CEILING.

   e. ALL LIGHT FIXTURES WEIGHING LESS THAN OR EQUAL TO 10 LB. SHALL HAVE ONE NO. 12 GAUGE SAFETY WIRE CONNECTED FROM FIXURE HOUSING TO STRUCTURE ABOVE. IT IS NOT NECESSARY FOR THESE SAFETY WIRES TO BE TAUT.

   f. ALL FIXTURES WEIGHING GREATER THAN 10 LB BUT LESS THAN OR EQUAL TO 56 LB. SHALL HAVE TWO NO. 12 GAUGE SAFETY WIRE CONNECTED FROM FIXURE HOUSING TO STRUCTURE ABOVE. IT IS NOT NECESSARY FOR THESE SAFETY WIRES TO BE TAUT.

   g. ALL FIXTURES WEIGHING GREATER THAN 56 LB. SHALL BE SUPPORTED DIRECTLY FROM STRUCTURE ABOVE BY APPROVED HANGERS.

   h. PENDENT-HUNG FIXTURES SHALL BE SUPPORTED DIRECTLY FROM THE STRUCTURE ABOVE USING NO LESS THAN NO. 9-GAUGE WIRE OR AN APPROVED ALTERNATE SUPPORT. THE CEILING SUSPENSION SYSTEM SHALL NOT PROVIDE ANY DIRECT SUPPORT.

   i. ALL RECESSED OR DROP-IN FIXTURES SHALL BE SUPPORTED DIRECTLY FROM FIXTURE HOUSING TO THE STRUCTURE ABOVE WITH A MINIMUM OF TWO NO. 12 GAUGE WIRES LOCATED AT DIAGONALLY OPPOSITE CORNERS. LEVELLING OR POSITIONING OF FIXURES MAY BE PROVIDED BY CEILING GRID. FIXTURE SUPPORT WIRES MAY BE SLIGHTLY LOOSE TO ALLOW THE FIXTURE TO SEAT IN THE GRID SYSTEM. FIXTURES SHALL NOT BE SUPPORTED FROM MAIN RUNNERS OR FURRING CHANNELS IF THE WEIGHT OF THE FIXTURES CAUSES TOTAL DEAD LOAD TO EXCEED THE DEFLECTION CAPABILITY OF THE CEILING SUSPENSION SYSTEM.

16. CEILINGS THAT ARE PART OF A FIRE RATED ASSEMBLY. PROVIDE A DETAIL AND DESIGN NUMBER FOR RATED CEILING ASSEMBLIES FROM AN APPROVED TESTING AGENCY. THE COMPONENTS AND INSTALLATION DETAILS SHALL CONFORM IN EVERY RESPECT WITH THE LISTED DETAIL AND NUMBER. DETAILS SHALL CLEARLY DEPICT ALL COMPONENTS, INCLUDING INSULATION MATERIALS, FRAMING AND ATTACHMENT OF THE DESIGN SO THAT THE ASSEMBLY CAN BE CONSTRUCTED AND INSPECTED ACCORDINGLY. POP RIVETS, SCREWS, OR OTHER ATTACHMENTS ARE NOT ACCEPTABLE UNLESS SPECIFICALLY DETAILED ON THE DRAWINGS AND APPROVED BY OSHPD.

Section Title : OSHPD STANDARD GYPSUM BOARD CEILING DETAILS	OPD No:
Sheet Title : GYP-BOARD SUSPENDED CEILING PAGE 4 OF 5	CG0.03

5/6/2017 9:07:20 AM

17. GYPSUM BOARD INSTALLATION SHALL COMPLY WITH ASTM C840-11:

   a. GYPSUM BOARD SHALL CONSIST OF SINGLE-PLY ½" OR 5/8" THICK IN ACCORDANCE WITH ASTM C11-10a.

   b. GYPSUM BOARD SHALL BE INSTALLED PERPENDICULAR TO FURRING WITH SCREWS AT 12" ON CENTER MAXIMUM, IN ACCORDANCE WITH ASTM C840-11.

   c. GYPSUM BOARD SHALL BE ATTACHED TO FURRING/FRAMING WITH ASTM C1002-07 TYPE S (ASTM A568-11b GRADES 1018 TO 1022) SCREWS (NOT LESS THAN, N0. 6, WITH MAJOR DIAMETER NOT LESS THAN 0.136 IN).

Section Title : OSHPD STANDARD GYPSUM BOARD CEILING DETAILS	OPD No:
Sheet Title : GYP-BOARD SUSPENDED CEILING PAGE 5 OF 5	CG0.04

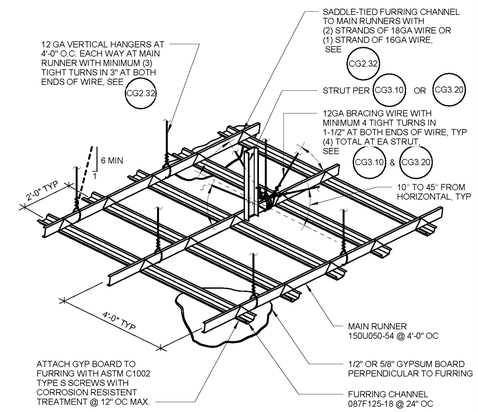

NOTES:

1. SEE GENERAL NOTES #13 & #14 ON CG0.02
2. STRUTS SHALL NOT REPLACE HANGER WIRES.
3. FOR CONDITIONS AT CORRIDOR SEE DRAWING NO. CG2.30
4. FOR MAIN RUNNER AND FURRING CHANNEL SPLICE CONNECTIONS, SEE CG2.31

ection Title : OSHPD STANDARD GYPSUM BOARD CEILING DETAILS	OPD No:
heet Title : SUSPENDED CEILING BRACING ASSEMBLY	CG2.10

5/6/2017 9:07:21 AM

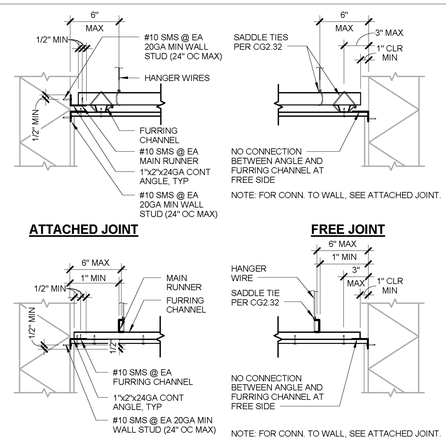

NOTES:

1. PERIMETER WALLS SHALL BE DESIGNED TO CARRY TRIBUTARY LATERAL FORCES PER TABLE BELOW. RDP TO VERIFY. RDP TO SPECIFY CONNECTION OF BACKING TO STUDS
2. WHEN GYPSUM BOARD IS TO BE APPLIED TO BOTH CEILING AND WALLS, GYPSUM BOARD SHALL BE APPLIED FIRST TO THE CEILING AND THEN TO WALLS IN ACCORDANCE WITH ASTM C840.

S_{DS} (g)	Fp
$S_{DS} \leq 1.15$	9.3 plf
$1.15 < S_{DS} \leq 1.73$	14.0 plf
$1.73 < S_{DS} \leq 2.50$	20.9 plf

Section Title : OSHPD STANDARD GYPSUM BOARD CEILING DETAILS	OPD No:
Sheet Title : CEILING PERIMETER	CG2.30

5/6/2017 9:07:20 AM

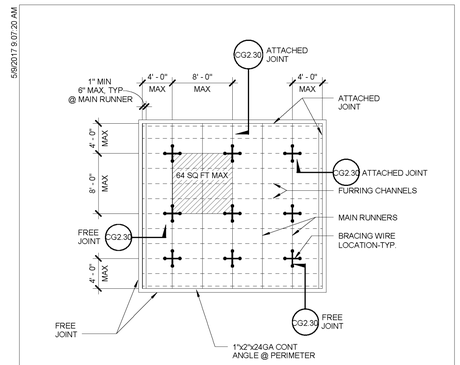

NOTES:

1. BRACING WIRES AND COMP. STRUT SHALL OCCUR AT EVERY 64 SQ. FT. MAX. IN ROOMS OVER 64 SQ. FT.
2. RDP MAY ELECT TO SPECIFY TIGHTER SPACING BETWEEN BRACING WIRES AND COMP. STRUTS TO ALLOW SMALLER ANCHORS PER SCHEDULES ON SHEETS CG4.31 & CG6.60.

Section Title : OSHPD STANDARD GYPSUM BOARD CEILING DETAILS	OPD No:
Sheet Title : TYPICAL CEILING PLAN FOR $1.73 < S_{DS} \leq 2.50$ AND z/h <= 1.0	CG2.20

PROJECT MANAGEMENT

ALAMEIDA ARCHITECTURE

CONSTRUCTION MANAGEMENT

555 S. MAIN STREET, SUITE 2
SEBASTOPOL, CA 95472
(707) 824-1219
WWW.ALAMEIDA.COM

COUNTY OF HUMBOLDT
The Home of the Redwoods

PROJECT

TENANT IMPROVEMENTS FOR ECONOMIC DEVELOPMENT AND CHILD SUPPORT SERVICES

2420 6TH STREET
EUREKA, CA

REGISTERED ARCHITECT
DONALD R ALAMEIDA
C-19767
Exp. 11/30/23
STATE OF CALIFORNIA

No.	Description	Date
1.	PLAN CHECK COMMENTS	12/12/22

SUSPENDED DRYWALL LAYOUT

Project number	2108
Date	5/8/22
Drawn by	Author
Checked by	Checker

A-7.2

Scale

5/2/2023 4:54:58 PM

5/9/2017 9:07:24 AM

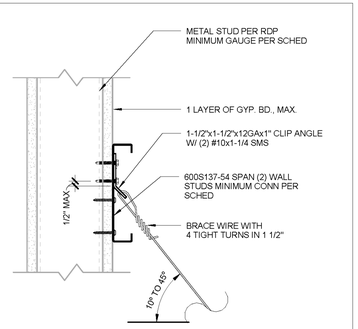

WALL STUD GAUGE	CONN TO WALL STUD	CONN TO WALL STUD ALT [3]
20 GA	(5) #10x1-1/4" SMS	(3) #10x1-1/4" SMS
18 GA	(4) #10x1-1/4" SMS	(2) #10x1-1/4" SMS

NOTES:

1. RDP SHALL DESIGN FRAMING WALL TO CARRY THE CEILING LOAD PER NOTE #2.
2. SEISMIC BRACE WIRE FORCE = 473 LBS (LRFD LOAD). BRACING WIRE SHALL HAVE A MINIMUM STRETCH LENGTH (CLR LENGTH BTWN TURNS) OF 12", WHEN USED AT FREE JOINT.
3. APPLIES WHERE CLIP ATTACHED DIRECTLY TO WALL STUD.

Section Title: OSHPD STANDARD GYPSUM BOARD CEILING DETAILS — OPD No:
Sheet Title: BRACING WIRE - METAL STUD WALL — CG4.35

5/9/2017 9:07:23 AM

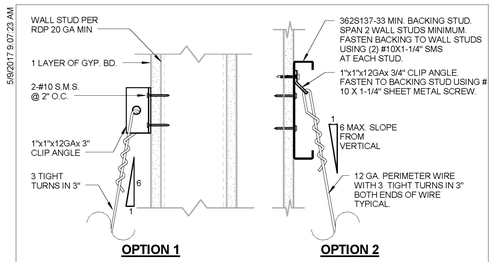

OPTION 1 **OPTION 2**

NOTES:

1. THIS IS APPLIED FOR PERIMETER WIRE ATTACHEMENT OR WHERE OBSTRUCTION PREVENTS ATTACHMENT TO STRUCTURE ABOVE
2. RDP SHALL DESIGN FRAMING WALL TO CARRY THE CEILING LOAD. SEE TABLE BELOW FOR LOADS. LOADS ASSUME A TRIBUTARY AREA OF 16 SQ.FT AND ARE UNFACTORED.
3. WALLS SHALL BE DESIGNED FOR HANGER FORCES BELOW. AT FREE JOINT, HANGER WIRE SHALL HAVE A MINIMUM STRETCH LENGTH (CLR LENGTH BTWN TURNS) OF 12"

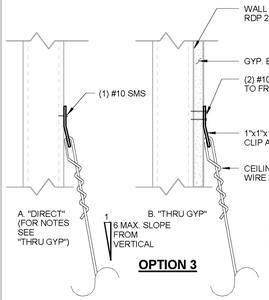

OPTION 3

HANGER FORCES	VERTICAL	HORIZONTAL
DEAD	64 LBS	11 LBS
SEISMIC (0.14S_{DS} Wp)		
S_{DS} <= 1.15	11 LBS	2 LBS
1.15 < S_{DS} <= 1.73	16 LBS	3 LBS
1.73 < S_{DS} <= 2.50	23 LBS	4 LBS

Section Title: OSHPD STANDARD GYPSUM BOARD CEILING DETAILS — OPD No:
Sheet Title: HANGER WIRE - METAL STUD WALL — CG4.25

5/9/2017 9:07:22 AM

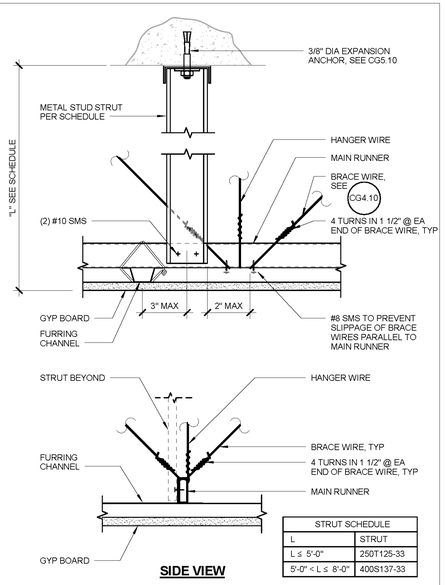

SIDE VIEW

STRUT SCHEDULE	
L	STRUT
L ≤ 5'-0"	250T125-33
5'-0" < L ≤ 8'-0"	400S137-33

Section Title: OSHPD STANDARD GYPSUM BOARD CEILING DETAILS — OPD No:
Sheet Title: STRUT & BRACING WIRE ASSEMBLY - METAL STUD TYPE STRUT — CG3.10

5/9/2017 9:07:21 AM

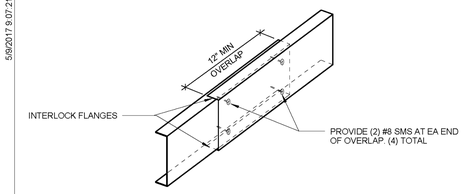

MAIN RUNNER SPLICE

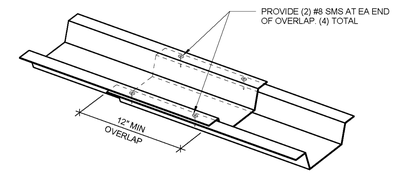

FURRING CHANNEL SPLICE

Section Title: OSHPD STANDARD GYPSUM BOARD CEILING DETAILS — OPD No:
Sheet Title: SPLICE DETAILS — CG2.31

5/9/2017 9:07:25 AM

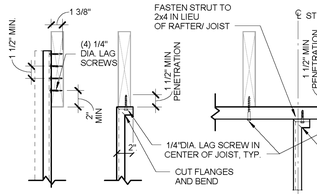

OPTION 1 **OPTION 2**

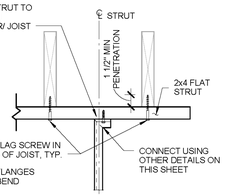

OPTION 3

CHANNEL STRUT

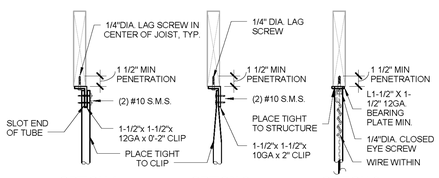

OPTION 1 **OPTION 2** **OPTION 3**

TUBE STRUT

NOTES:

1. FRAMING MEMBERS MUST BE DESIGNED TO CARRY THE CEILING LOADS, RDP TO VERIFY.
2. RDP SHALL VERIFY THAT SCREWS AT THE BOTTOM FLANGE OF TRUSS IS ACCEPTABLE.
3. SEE PAGES CG5.20, CG5.30 & CG5.50 FOR ADDITIONAL INFORMATION.

Section Title: OSHPD STANDARD GYPSUM BOARD CEILING DETAILS — OPD No:
Sheet Title: CONNECTION TO SAWN TIMBER WITHOUT GYPSUM BOARD — CG5.60

5/9/2017 9:07:24 AM

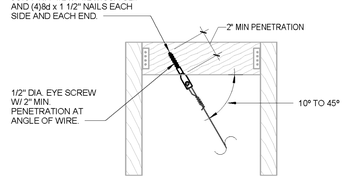

BRACING WIRE

NOTES:
1. FRAMING MEMBERS SHALL BE DESIGNED TO CARRY THE CEILING LOADS, RDP TO VERIFY
2. RDP SHALL VERIFY THAT SCREWS AT THE BOTTOM FLANGE OF TRUSS IS ACCEPTABLE

Section Title: OSHPD STANDARD GYPSUM BOARD CEILING DETAILS — OPD No:
Sheet Title: BRACING WIRE - SAWN TIMBER — CG4.34

5/9/2017 9:07:23 AM

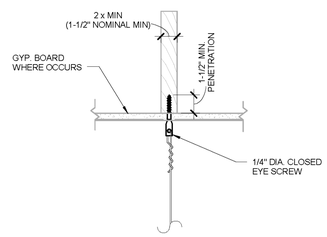

HANGER WIRE

NOTES:
1. FRAMING MEMBERS SHALL BE DESIGNED TO CARRY THE CEILING LOADS, RDP TO VERIFY
2. RDP SHALL VERIFY THAT SCREWS AT THE BOTTOM FLANGE OF TRUSS IS ACCEPTABLE

Section Title: OSHPD STANDARD GYPSUM BOARD CEILING DETAILS — OPD No:
Sheet Title: HANGER WIRE - SAWN TIMBER — CG4.24

5/9/2017 9:07:22 AM

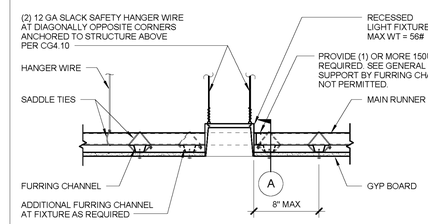

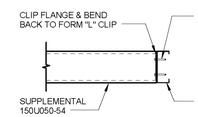

A **DETAIL**

NOTE:

IF THE MAIN RUNNER IS CUT DUE TO FIXTURES, RDP SHALL SPECIFY ADDITIONAL HANGER WIRES AND/OR BRACING WIRES, AS REQUIRED TO MAINTAIN STRUCTURAL INTEGRITY.

Section Title: OSHPD STANDARD GYPSUM BOARD CEILING DETAILS — OPD No:
Sheet Title: RECESSED LIGHT FIXTURE — CG2.71

PROJECT MANAGEMENT

ALAMEIDA ARCHITECTURE

CONSTRUCTION MANAGEMENT

555 S. MAIN STREET, SUITE 2
SEBASTOPOL, CA 95472
(707) 824-1219
WWW.ALAMEIDA.COM

PROJECT

TENANT IMPROVEMENTS FOR ECONOMIC DEVELOPMENT AND CHILD SUPPORT SERVICES

2420 6TH STREET
EUREKA, CA

REGISTERED ARCHITECT DONALD R. ALAMEIDA C-19767 Exp. 11/30/23 STATE OF CALIFORNIA

No.	Description	Date
1.	PLAN CHECK COMMENTS	12/12/22

SUSPENDED DRYWALL DETAILS

Project number	2108
Date	5/8/22
Drawn by	Author
Checked by	Checker

A-7.3

Scale

5/2/2023 4:55:02 PM

5/9/2017 9:07:27 AM

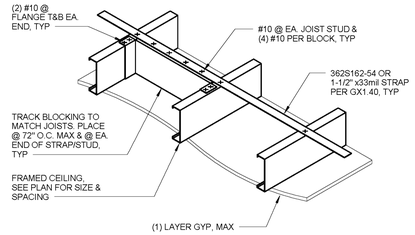

CEILING JOIST - FINISH ONE SIDE ONLY

Section Title : OSHPD STANDARD GYPSUM BOARD CEILING DETAILS

Sheet Title : JOISTED GYP BOARD CEILING BLOCKING DETAIL

OPD No: CJ2.10

5/9/2017 9:07:27 AM

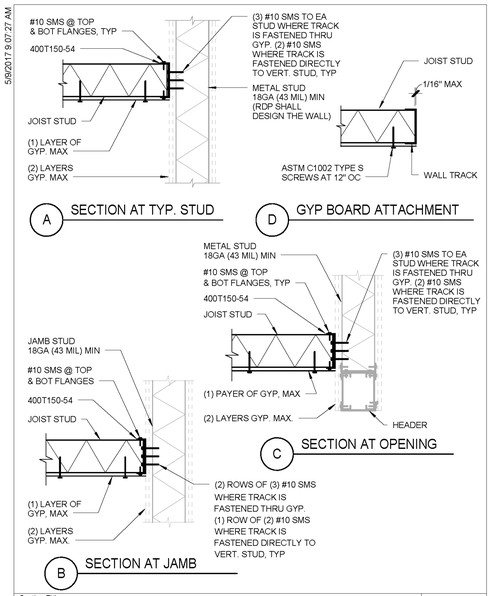

Section Title : OSHPD STANDARD GYPSUM BOARD CEILING DETAILS

Sheet Title : JOISTED GYP BOARD CEILING CONNECTIONS

OPD No: CJ2.30

PROJECT MANAGEMENT

ALAMEIDA ARCHITECTURE

CONSTRUCTION MANAGEMENT

555 S. MAIN STREET, SUITE 2
SEBASTOPOL, CA 95472
(707) 824-1219
WWW.ALAMEIDA.COM

PROJECT

TENANT IMPROVEMENTS FOR ECONOMIC DEVELOPMENT AND CHILD SUPPORT SERVICES

2420 6TH STREET
EUREKA, CA

REGISTERED ARCHITECT DONALD R ALAMEIDA C-19767 Exp. 11/30/23 STATE OF CALIFORNIA

No.	Description	Date
1.	PLAN CHECK COMMENTS	12/12/22

SUSPENDED DRYWALL CEILING WHERE PARTIALLY JOISTED

Project number	2108
Date	5/8/22
Drawn by	Author
Checked by	Checker

A-7.4

Scale

5/2/2023 4:55:05 PM

FINISH MATERIALS LEGEND

CODE	SURFACE	PRODUCT	MANUFACTURER	STYLE	COLOR
F1	FLOOR	LUXURY SHEET VINYL	ARMSTRONG	NATURAL CREATIONS NA193	AVILA OAK, VIENNE SMOKE
F3	FLOOR	LUXURY SHEET VINYL	ARMSTRONG		
W1	WALL	FIELD PAINT PAINT	BENJAMIN MOORE	# 1590	
AW1	WALL	ACCENT WALL PAINT	BENJAMIN MOORE	# 1592	
WC1	WALL	WALL COVERING	KOROSEAL	SAIL CLOTH 8321-83	WAFT
WC2	WALL	WALL COVERING	KOROSEAL	ORLEANS R92190	FINE SILVER
WC4	WALL	WOOD PLANK WALL SIDING	LOCALLY SOURCED 1X6 REDWOOD - RECLAIMED	FINISH: SANSIN ENVIROSTAIN	SPINAKER GRAY 101
B1	BASE	RUBBER BASE	BURKE	727	THUNDER
T1	TRIM	TRIM PAINT	BENJAMIN MOORE	# 1590	
C1	CEILING	ACUSTICAL TILE	ARMSTRONG	MATCH EXISTING	
C2	CEILING	PAINTED DRYWALL	BENJAMIN MOORE	# 1590	
P LAM 1	CASEWORK	PLASTIC LAMINATE	FORMICA	9285-58	SENGE BLANC - MATTE
P LAM 2	CASEWORK	PLASTIC LAMINATE	FORMICA	6307-58	BURNT STRAND - MATTE
P LAM 3	CASEWORK	PLASTIC LAMINATE	FORMICA	912C-58	STORM MATTE/ COLOR CORE

ROOM FINISH SCHEDULE

NUMBER	NAME	BASE	FLOOR CODE	EAST WALL	SOUTH WALL	WEST WALL	NORTH WALL	CEILING	CEILING HEIGHT	COMMENTS
101	EXHIBIT / LOBBY	B-1	F-1	G.B. / W1	G.B./WC4	G..B. / P.T.	W1	C1	11'-11"	
102	ECD CONF. 1	B-1	F-1	W1	STR. FRONT	STR. FRONT	W1	C1	11'-11"	
103	ECD OFFICE 1	B-1	F-2	G.B. / W1	G.B. / W1	G..B. / W1	G.B. / WC1	C1	9'-0"	
104	BREAK OUT 1	B-1	F-1	G.B. / WC2	G.B. / W1	STR. FRONT	G.B. / PT.	C1	11'-11"	
105	COPY 1	B-1	F-1	G.B. / W1	G.B. / W1	G..B. / W1	G.B. / W1	C1	11'-11"	
106	EC DEV OPEN OFFICE	B-1	F-1	G.B. / W1	G.B. / W1	G..B. / W1	G.B. / W1	C1	11'-11"	
106A	RECEPT.	B-1	F-1	G.B. / W1	G.B./WC4	G..B. / W1	-	C1	11'-11"	
106B	CAFE HALL	B-1	F-1	G.B. / WC4	G.B./W1	G..B. / W1	G.B. / W1	C1	11'-11"	
107	ECD OFFICE 2	B-1	F-1	G.B. / W1	G.B. / W1	G..B. / WC1	G.B. / W1	C1	11'-11"	
108	OFFICE	B-1	F-1	G.B. / W1	G.B. / W1	G..B. / W1	G.B. / W1	C1	11'-11"	
109	STORAGE	B-1	F-1	W1	G.B. / W1	G..B. / W1	G.B. / W1	C1	11'-11"	
110	OFFICE	B-1	F-1	G.B. / W1	G.B. / W1	G..B. / W1	G.B. / W1	C1	11'-11"	
111	BREAKOUT 2	B-1	F-1	G.B. / WC2	W1	G..B. / W1	G.B. / W1	C1	11'-11"	
112	EXHIB. STOR.	B-1	F-1	G.B. / W1	G.B. / W1	G..B. / P.T.	G.B. / W1	C1	11'-11"	
113	W.C.	COVE	F-1	G.B. / W1	G.B. / W1	G..B. / P.T.	G.B. / W1	G.B. / W1	11'-11"	
120	VILLAGE	B-1	F-1	G.B. / W1	G.B. / W1	G..B. / W1	G.B. / W1	C1	11'-11"	
121	COLLABORATION	B-1	F-1	G.B. / W1	G.B. /WC1	G..B. / W1	G.B. / WC1	C1	11'-11"	
122	OFFICE	B-1	F-2	G.B. / W1	G.B. / W1	G..B. / W1	G.B. / W1	C1	11'-11"	
123	OFFICE	B-1	F-2	G.B. / W1	G.B. / W1	G..B. / W1	G.B. / W1	C1	11'-11"	
124	OFFICE	B-1	F-2	G.B. / W1	G.B. / W1	G..B. / W1	G.B. / W1	C1	11'-11"	
124	CUST.	B-1	F-1	G.B. / W1	G.B. / W1	G..B. / W1	G.B. / W1	C1	11'-11"	
127	OFFICE	B-1	F-2	G.B. / W1	G.B. / W1	G..B. / W1	G.B. / W1	C1	11'-11"	
128	OFFICE	B-1	F-2	G.B. / W1	G.B. / W1	G..B. / W1	G.B. / W1	C1	11'-11"	
129	OFFICE	EXISTING	EXISTING	EXISTING	EXISTING	EXISTING	EXISTING	EXISTING	EXISTING	
130	OFFICE	EXISTING	EXISTING	EXISTING	EXISTING	EXISTING	EXISTING	EXISTING	EXISTING	
131	CONFERENCE	B-1	F-1	W1	W1	W1	WC-3	C1	11'-11"	
132	OFFICE	EXISTING	EXISTING	EXISTING	EXISTING	EXISTING	EXISTING	EXISTING	EXISTING	
133	STORAGE	B-1	F-1	W1	W1	W1	W1	C1	11'-11"	
134	OFFICE	EXISTING	EXISTING	EXISTING	EXISTING	EXISTING	EXISTING	EXISTING	EXISTING	
135	OPEN OFFICE	EXISTING	EXISTING	EXISTING	EXISTING	EXISTING	EXISTING	EXISTING	EXISTING	
136	OFFICE	EXISTING	EXISTING	EXISTING	EXISTING	EXISTING	EXISTING	EXISTING	EXISTING	
137	OFFICE	EXISTING	EXISTING	EXISTING	EXISTING	EXISTING	EXISTING	EXISTING	EXISTING	
138	OFFICE	EXISTING	EXISTING	EXISTING	EXISTING	EXISTING	EXISTING	EXISTING	EXISTING	
139	OFFICE	EXISTING	EXISTING	EXISTING	EXISTING	EXISTING	EXISTING	EXISTING	EXISTING	
140	RECEPT.	EXISTING	EXISTING	EXISTING	EXISTING	EXISTING	EXISTING	EXISTING	EXISTING	
141	OFFICE	EXISTING	EXISTING	EXISTING	EXISTING	EXISTING	EXISTING	EXISTING	EXISTING	
142	OFFICE	EXISTING	EXISTING	EXISTING	EXISTING	EXISTING	EXISTING	EXISTING	EXISTING	
143	CORRIDOR	B-1	F-1	W1	W1	G..B. / W1	W1	W1	11'-11"	(N) FIRE RATED CEILING - 1 HOUR
144	OFFICE	EXISTING	EXISTING	EXISTING	EXISTING	EXISTING	EXISTING	EXISTING	EXISTING	
145	OFFICE	EXISTING	EXISTING	EXISTING	EXISTING	EXISTING	EXISTING	EXISTING	EXISTING	
146	OFFICE	EXISTING	EXISTING	EXISTING	EXISTING	EXISTING	EXISTING	EXISTING	EXISTING	
147	OFFICE	B-1	F-1	G.B. / W1	G.B. / W1	G..B. / W1	G.B. / W1	C1	11'-11"	
148	STOR.	EXISTING	EXISTING	EXISTING	EXISTING	EXISTING	EXISTING	EXISTING	EXISTING	
160	BREAK RM.	B-1	F-1	G.B. / W1	G.B. / W1	G..B. / W1	G.B. / W1	C1	11'-11"	
161	CONFER. 1	B-1	F-1	G.B. / W1.	G.B. / W1	G..B. / W1	G.B. / W1	G.B. / PT.	11'-11"	
162	CONF. STOR,	B-1	F-1	G.B. / W1	G.B. / W1	G..B. / W1	G.B. / W1	C1	11'-11"	
164	MENS	(E) TILE	(E) TILE	W1	EXISTING	W1	W1	W1	11'-11"	PATCH / REPLACEIN KIND
165	WOMENS	(E) TILE	(E) TILE	W1	EXISTING	W1	W1	W1	11'-11"	PATCH / REPLACEIN KIND
166	LOUNGE	B-1	F-1	G.B. / W1	G.B. / W1	G..B. / W1	W1	G.B. / W1	11'-11"	
170	INFOR. SERVICES	B-1	F-1	W1	W1	W1	W1	C1	11'-11"	
171	SYST. ANYLSIS	B-1	F-1	W1	W1	W1	W1	C1	11'-11"	
172	TEL. RM	B-1	EXISTING	W1	W1	W1	W1	C1	11'-11"	
173	SERVER	B-1	EXISTING	W1	W1	W1	W1	C1	11'-11"	
174	EQ. STOR	B-1	F-1	W1	W1	W1	W1	C1	11'-11"	
180	CORRIDOR	B-1	F-1	W1	W1	W1	W1	W1	11'-11"	(E) FIRE RATED CEILING 1-HOUR
181	CORRIDOR	B-1	F-1	W1	W1	W1	W1	W1	11'-11"	(E) FIRE RATED CEILING 1-HOUR
190	COPY/STOR.	B-1	F-1	G.B. / W1	G.B. / W1	W1	W1	C1	11'-11"	
191	OFFICE	B-1	F-1	G.B. / W1	G.B. / W1	W1	G.B. / W1	C1	11'-11"	
192	OFFICE	B-1	F-1	G.B. / W1	G.B. / W1	W1	W1	C1	11'-11"	
194	HALL	B-1	F-1	G.B. / W1	G.B. / W1	G..B. / W1	W1	C1	11'-11"	
195	INTERVIEW 1	B-1	F-1	G.B. / W1	G.B. / W1	G..B. / W1	G.B. / W1	C1	11'-11"	
196	INTERVIEW 2	B-1	F-1	G.B. / W1	G.B. / W1	G..B. / W1	G.B. / W1	C1	11'-11"	
197	CSS LOBBY	B-1	F-1	G.B. / W1	G.B. / W1	G..B. / W1	G.B. / W1	G.B. / W1	11'-11"	
198	CSS CONFER.	B-1	F-1	G.B. / W1	G.B. / W1	G..B. / W1	G.B./WC3	C1	11'-11"	
199A	CSS RECEP.	B-1	F-1	G.B. / W1	G.B. / W1	G..B. / W1	G.B. / W1	C1	11'-11"	

PROJECT MANAGEMENT

ALAMEIDA ARCHITECTURE

CONSTRUCTION MANAGEMENT

555 S. MAIN STREET, SUITE 2
SEBASTOPOL, CA 95472
(707) 824-1219
WWW.ALAMEIDA.COM

COUNTY OF HUMBOLDT
The Home of the Redwoods

PROJECT

TENANT IMPROVENMENTS FOR ECONOMIC DEVELOPMENT AND CHILD SUPPORT SERVICES

2420 6TH STREET
EUREKA, CA

REGISTERED ARCHITECT
DONALD R ALAMEIDA
C-19767
Exp. 1/1/2023
STATE OF CALIFORNIA

No.	Description	Date
1.	PLAN CHECK COMMENTS	12/12/22

ROOM SCHEDULE

Project number	2108
Date	5/8/22
Drawn by	Author
Checked by	Checker

A-8

Scale 1/4" = 1'-0"

5/3/2023 9:01:53 AM

DOOR SCHEDULE (ONLY NEW DOORS LISTED EXISTING DOORS NOT LISTED TO REMAIN)

		DOOR							FRAME						
Mark	Type	Width	Height	Thickness	Material	Finish	Fire Rating	Hardware	Type	Material	Finish	JAMB DTL.	HEAD DTL.	Head Height	Comments
101B	24	3' - 0"	8' - 0"	0' - 1 3/4"	ALUM. / GLASS	ANODIZED	NOT RATED	1	WELDED	ALUMINUM	ANODIZED	5-A4.1 SIM.	5-A4.1	7' - 10 3/4"	STOREFRONT DOOR
101C	22	3' - 0"	8' - 0"	0' - 1 3/4"	ALUM. / GLASS	ANODIZED	NOT RATED	1	WELDED	ALUMINUM	ANODIZED	5-A4.1 SIM.	5-A4.1	7' - 10 3/4"	STORE FRONT DOOR
102A	18	3' - 0"	7' - 11"	0' - 1 3/4"	ALUM. / GLASS	ANODIZED	NOT RATED	2	WELDED	ALUMINUM	ANODIZED	5-A4.1 SIM.	5-A4.1	7' - 10 3/4"	STOREFRONT DOOR
103A	4	3' - 0"	7' - 0"	0' - 1 3/4"	ALUM. / GLASS	ANODIZED	NOT RATED	2	WELDED	STEEL	PAINTED	5-A4.1 SIM.	5-A4.1	7' - 0"	
103B	1	3' - 0"	7' - 0"	0' - 1 3/4"	S.C. WOOD	STAINED	NOT RATED	4	WELDED	STEEL	PAINTED	1-A8.1	1-A-8.1 SIM.	7' - 0"	
104A	4	3' - 0"	7' - 0"	0' - 1 3/4"	ALUM. / GLASS	ANODIZED	NOT RATED	2	WELDED	ALUMINUM	ANODIZED	5-A4.1 SIM.	5-A4.1	7' - 0"	
105A	1	3' - 0"	7' - 0"	0' - 1 3/4"	S.C. WOOD	STAINED	NOT RATED	4	WELDED	STEEL	PAINTED	1-A8.1	1-A-8.1 SIM.	7' - 0"	
107A	1	3' - 0"	7' - 0"	0' - 1 3/4"	S.C. WOOD	STAINED	NOT RATED	4	WELDED	STEEL	PAINTED	1-A8.1	1-A-8.1 SIM.	7' - 0"	
108A	1	3' - 0"	7' - 0"	0' - 1 3/4"	S.C. WOOD	STAINED	NOT RATED	4	WELDED	STEEL	PAINTED	1-A8.1	1-A-8.1 SIM.	7' - 0"	
109A	1	3' - 0"	7' - 0"	0' - 1 3/4"	S.C. WOOD	STAINED	NOT RATED	4	WELDED	STEEL	PAINTED	1-A8.1	1-A-8.1 SIM.	7' - 0"	
110A	1	3' - 0"	7' - 0"	0' - 1 3/4"	S.C. WOOD	STAINED	NOT RATED	4	WELDED	STEEL	PAINTED	1-A8.1	1-A-8.1 SIM.	7' - 0"	
111A	1	3' - 0"	7' - 0"	0' - 1 3/4"	S.C. WOOD	STAINED	NOT RATED	4	WELDED	STEEL	PAINTED	1-A8.1	1-A-8.1 SIM.	7' - 0"	
112A	1	3' - 0"	7' - 0"	0' - 1 3/4"	S.C. WOOD	PAINTED	NOT RATED	4	WELDED	STEEL	PAINTED	1-A8.1	1-A-8.1 SIM.	7' - 0"	
113A	1	3' - 0"	7' - 0"	0' - 1 3/4"	S.C. WOOD	STAINED	NOT RATED	6	WELDED	STEEL	PAINTED	1-A8.1	1-A-8.1 SIM.	7' - 0"	
120B	2	3' - 0"	7' - 0"	0' - 1 3/4"	S.C. WOOD	STAINED	20 MIN.	7	WELDED	STEEL	PAINTED	1-A8.1	1-A-8.1 SIM.	7' - 0"	
123A	1	3' - 0"	7' - 0"	0' - 1 3/4"	S.C. WOOD	STAINED	NOT RATED	4	WELDED	STEEL	PAINTED	1-A8.1	1-A-8.1 SIM.	7' - 0"	
124A	1	3' - 0"	7' - 0"	0' - 1 3/4"	S.C. WOOD	STAINED	NOT RATED	4	WELDED	STEEL	PAINTED	1-A8.1	1-A-8.1 SIM.	7' - 0"	
127A	1	3' - 0"	7' - 0"	0' - 1 3/4"	S.C. WOOD	STAINED	NOT RATED	4	WELDED	STEEL	PAINTED	1-A8.1	1-A-8.1 SIM.	7' - 0"	
128A	1	3' - 0"	7' - 0"	0' - 1 3/4"	S.C. WOOD	STAINED	NOT RATED	4	WELDED	STEEL	PAINTED	1-A8.1	1-A-8.1 SIM.	7' - 0"	
131A	2	3' - 0"	7' - 0"	0' - 1 3/4"	S.C. WOOD	STAINED	20 MIN.	7	WELDED	STEEL	PAINTED	1-A8.1	1-A-8.1 SIM.	7' - 0"	
133A	8	6' - 0"	6' - 6"	0' - 1 3/4"	S.C. WOOD	STAINED	20 MIN.	4	WELDED	STEEL	PAINTED	1-A8.1	1-A-8.1 SIM.	6' - 6"	
143A	2	3' - 0"	7' - 0"	0' - 1 3/4"	S.C. WOOD	STAINED	20 MIN.	7	WELDED	STEEL	PAINTED	1-A8.1	1-A-8.1 SIM.	7' - 0"	
190A	1	3' - 0"	7' - 0"	0' - 1 3/4"	S.C. WOOD	STAINED	NOT RATED	4	WELDED	STEEL	PAINTED	1-A8.1	1-A-8.1 SIM.	7' - 0"	
191A	1	3' - 0"	7' - 0"	0' - 1 3/4"	S.C. WOOD	STAINED	NOT RATED	4	WELDED	STEEL	PAINTED	1-A8.1	1-A-8.1 SIM.	7' - 0"	
192A	1	3' - 0"	7' - 0"	0' - 1 3/4"	S.C. WOOD	STAINED	NOT RATED	4	WELDED	STEEL	PAINTED	1-A8.1	1-A-8.1 SIM.	7' - 0"	
195A	1	3' - 0"	7' - 0"	0' - 1 3/4"	S.C. WOOD	STAINED	NOT RATED	4	WELDED	STEEL	PAINTED	1-A8.1	1-A-8.1 SIM.	7' - 0"	
195B	1	3' - 0"	7' - 0"	0' - 1 3/4"	S.C. WOOD	STAINED	NOT RATED	4	WELDED	STEEL	PAINTED	1-A8.1	1-A-8.1 SIM.	7' - 0"	
196A	1	3' - 0"	7' - 0"	0' - 1 3/4"	S.C. WOOD	STAINED	NOT RATED	4	WELDED	STEEL	PAINTED	1-A8.1	1-A-8.1 SIM.	7' - 0"	
196B	1	3' - 0"	7' - 0"	0' - 1 3/4"	S.C. WOOD	STAINED	NOT RATED	4	WELDED	STEEL	PAINTED	1-A8.1	1-A-8.1 SIM.	7' - 0"	
197A	1	3' - 0"	7' - 0"	0' - 1 3/4"	S.C. WOOD	STAINED	NOT RATED	4	WELDED	STEEL	PAINTED	1-A8.1	1-A-8.1 SIM.	7' - 0"	
198A	1	3' - 0"	7' - 0"	0' - 1 3/4"	S.C. WOOD	STAINED	NOT RATED	4	WELDED	STEEL	PAINTED	1-A8.1	1-A-8.1 SIM.	7' - 0"	
198B	1	3' - 0"	7' - 0"	0' - 1 3/4"	S.C. WOOD	STAINED	NOT RATED	4	WELDED	STEEL	PAINTED	1-A8.1	1-A-8.1 SIM.	7' - 0"	
199A	1	3' - 0"	7' - 0"	0' - 1 3/4"	S.C. WOOD	STAINED	NOT RATED	4	WELDED	STEEL	PAINTED	1-A8.1	1-A-8.1 SIM.	7' - 0"	

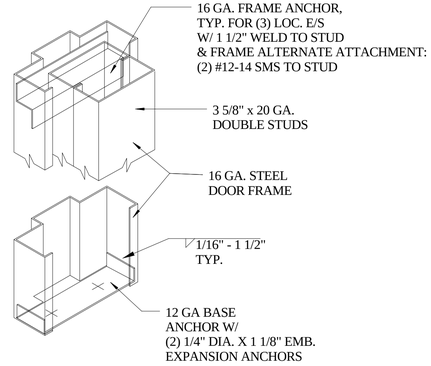

3 A-8.1 HOLLOW METAL FRAME ANCHOR
3" = 1'-0"

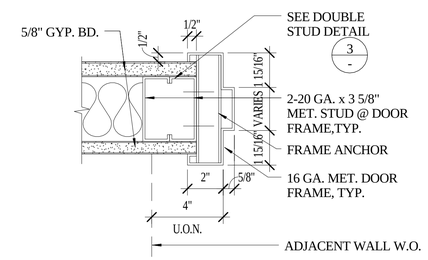

1 A-8.1 HOLLOW METAL FRAME DOOR JAMB
3" = 1'-0"

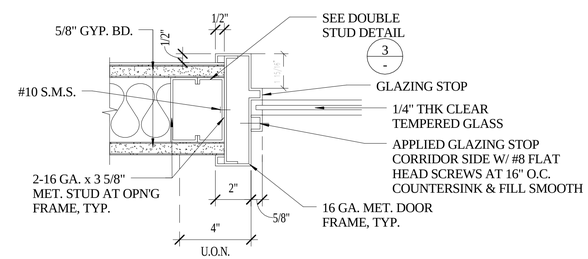

2 A-8.1 HOLLOW METAL FRAME INTER. WINDOW
3" = 1'-0"

PROJECT MANAGEMENT

ALAMEIDA ARCHITECTURE

CONSTRUCTION MANAGEMENT

555 S. MAIN STREET, SUITE 2
SEBASTOPOL, CA 95472
(707) 824-1219
WWW.ALAMEIDA.COM

PROJECT

TENANT IMPROVENMENTS FOR ECONOMIC DEVELOPMENT AND CHILD SUPPORT SERVICES

2420 6TH STREET
EUREKA, CA

REGISTERED ARCHITECT
DONALD R. ALAMEIDA
C-19767
Exp. 11/30/23
STATE OF CALIFORNIA

No.	Description	Date
1.	PLAN CHECK COMMENTS	12/12/22

DOOR SCHEDULE & INTERIOR OPENINGS DETAILS

Project number	2108
Date	5/8/22
Drawn by	Author
Checked by	Checker

A-8.1

Scale 3" = 1'-0"

5/2/2023 4:55:09 PM

2019 CALIFORNIA GREEN BUILDING STANDARDS CODE
NONRESIDENTIAL MANDATORY MEASURES, SHEET 1 (January 2020, Includes August 2019 Supplement)

AIA California

Y = YES
N/A = NOT APPLICABLE
RESPON. PARTY = RESPONSIBLE PARTY (ie: ARCHITECT, ENGINEER, OWNER, CONTRACTOR, INSPECTOR ETC.)

CHAPTER 3
GREEN BUILDING
SECTION 301 GENERAL

301.1 SCOPE. Buildings shall be designed to include the green building measures specified as mandatory in the application checklists contained in this code. Voluntary green building measures are also included in the application checklists and may be included in the design and construction of structures covered by this code, but are not required unless adopted by a city, county, or city and county as specified in Section 101.7.

301.3 NONRESIDENTIAL ADDITIONS AND ALTERATIONS. [BSC-CG] The provisions of individual sections of Chapter 5 apply to newly constructed buildings, building additions of 1,000 square feet or greater, and/or building alterations with a permit valuation of $200,000 or above (for occupancies within the authority of California Building Standards Commission). Code sections relevant to additions and alterations shall only apply to the portions of the building being added or altered within the scope of the permitted work.

A code section will be designated by a banner to indicate where the code section only applies to newly constructed buildings [N] or to additions and/or alterations [A]. When the code section applies to both, no banner will be used.

301.3.1 Nonresidential additions and alterations that cause updates to plumbing fixtures only:

Note: On and after January 1, 2014, certain commercial real property, as defined in Civil Code Section 1101.3, shall have its noncompliant plumbing fixtures replaced with appropriate water-conserving plumbing fixtures under specific circumstances. See Civil Code Section 1101.1 *et seq.* for definitions, types of commercial real property affected, effective dates, circumstances necessitating replacement of noncompliant plumbing fixtures, and duties and responsibilities for ensuring compliance.

301.3.2 Waste Diversion. The requirements of Section 5.408 shall be required for additions and alterations whenever a permit is required for work.

301.4 PUBLIC SCHOOLS AND COMMUNITY COLLEGES. (see GBSC)
301.5 HEALTH FACILITIES. (see GBSC)

SECTION 302 MIXED OCCUPANCY BUILDINGS

302.1 MIXED OCCUPANCY BUILDINGS. In mixed occupancy buildings, each portion of a building shall comply with the specific green building measures applicable to each specific occupancy.

SECTION 303 PHASED PROJECTS

303.1 PHASED PROJECTS. For shell buildings and others constructed for future tenant improvements, only those code measures relevant to the building components and systems considered to be new construction (or newly constructed) shall apply.

303.1.1 Initial Tenant Improvements. The provisions of this code shall apply only to the initial tenant improvements to a project. Subsequent tenant improvements shall comply with the scoping provisions in Section 301.3 non-residential additions and alterations.

ABBREVIATION DEFINITIONS:

HCD	Department of Housing and Community Development
BSC	California Building Standards Commission
DSA-SS	Division of the State Architect, Structural Safety
OSHPD	Office of Statewide Health Planning and Development
LR	Low Rise
HR	High Rise
AA	Additions and Alterations
N	New

CHAPTER 5
NONRESIDENTIAL MANDATORY MEASURES

DIVISION 5.1 PLANNING AND DESIGN

SECTION 5.101 GENERAL
5.101.1 SCOPE
The provisions of this chapter outline planning, design and development methods that include environmentally responsible site selection, building design, building siting and development to protect, restore and enhance the environmental quality of the site and respect the integrity of adjacent properties.

SECTION 5.102 DEFINITIONS
5.102.1 DEFINITIONS
The following terms are defined in Chapter 2 *(and are included here for reference)*

CUTOFF LUMINAIRES. Luminaires whose light distribution is such that the candela per 1000 lamp lumens does not numerically exceed 25 (2.5 percent) at an angle of 90 degrees above nadir, and 100 (10 percent) at a vertical angle of 80 degrees above nadir. This applies to all lateral angles around the luminaire.

LOW-EMITTING AND FUEL EFFICIENT VEHICLES.
Eligible vehicles are limited to the following:

1. Zero emission vehicle (ZEV), including neighborhood electric vehicles (NEV), partial zero emission vehicle (PZEV), advanced technology PZEV (AT ZEV) or CNG fueled (original equipment manufacturer only) regulated under Health and Safety Code section 43800 and CCR, Title 13, Sections 1961 and 1962.
2. High-efficiency vehicles, regulated by U.S. EPA, bearing High-Occupancy Vehicle (HOV) car pool lane stickers issued by the Department of Motor Vehicles.

NEIGHBORHOOD ELECTRIC VEHICLE (NEV). A motor vehicle that meets the definition of "low-speed vehicle" either in Section 385.5 of the Vehicle Code or in 49CFR571.500 (as it existed on July 1, 2000), and is certified to zero-emission vehicle standards.

TENANT-OCCUPANTS. Building occupants who inhabit a building during its normal hours of operation as permanent occupants, such as employees, as distinguished from customers and other transient visitors.

VANPOOL VEHICLE. Eligible vehicles are limited to any motor vehicle, other than a motortruck or truck tractor, designed for carrying more than 10 but not more than 15 persons including the driver, which is maintained and used primarily for the nonprofit work-related transportation of adults for the purpose of ridesharing.

Note: Source: Vehicle Code, Division 1, Section 668

ZEV. Any vehicle certified to zero-emission standards.

SECTION 5.106 SITE DEVELOPMENT
5.106.1 STORM WATER POLLUTION PREVENTION FOR PROJECTS THAT DISTURB LESS THAN ONE ACRE OF LAND. Newly constructed projects and additions which disturb less than one acre of land, and are not part of a larger common plan of development or sale, shall prevent the pollution of storm water runoff from the construction activities through one or more of the following measures:

5.106.1.1 Local ordinance. Comply with a lawfully enacted storm water management and/or erosion control ordinance.

5.106.1.2 Best Management Practices (BMPs). Prevent the loss of soil through wind or water erosion by implementing an effective combination of erosion and sediment control and good housekeeping BMPs.

1. Soil loss BMPs that should be considered for implementation as appropriate for each project include, but are not limited to, the following:
   a. Scheduling construction activity during dry weather, when possible.
   b. Preservation of natural features, vegetation, soil, and buffers around surface waters.
   c. Drainage swales or lined ditches to control stormwater flow.
   d. Mulching or hydroseeding to stabilize disturbed soils.
   e. Erosion control to protect slopes.
   f. Protection of storm drain inlets (gravel bags or catch basin inserts).
   g. Perimeter sediment control (perimeter silt fence, fiber rolls).
   h. Sediment trap or sediment basin to retain sediment on site.
   i. Stabilized construction exits.
   j. Wind erosion control.
   k. Other soil loss BMPs acceptable to the enforcing agency.
2. Good housekeeping BMPs to manage construction equipment, materials, non-stormwater discharges and wastes that should be considered for implementation as appropriate for each project include, but are not limited to, the following:
   a. Dewatering activities.
   b. Material handling and waste management.
   c. Building materials stockpile management.
   d. Management of washout areas (concrete, paints, stucco, etc.).
   e. Control of vehicle/equipment fueling to contractor's staging area.
   f. Vehicle and equipment cleaning performed off site.
   g Spill prevention and control.
   h. Other housekeeping BMPs acceptable to the enforcing agency.

5.106.2 STORMWATER POLLUTION PREVENTION FOR PROJECTS THAT DISTURB ONE OR MORE ACRES OF LAND. Comply with all lawfully enacted stormwater discharge regulations for projects that (1) disturb one acre or more of land, or (2) disturb less than one acre of land but are part of a larger common plan of development sale.

Note: Projects that (1) disturb one acre or more of land, or (2) disturb less than one acre of land but are part of the larger common plan of development or sale must comply with the post-construction requirements detailed in the applicable National Pollutant Discharge Elimination System (NPDES) General permit for Stormwater Discharges Associated with Construction and Land Disturbance Activities issued by the State Water Resources Control Board or the Lahontan Regional Water Quality Control Board (for projects in the Lake Tahoe Hydrologic Unit).

The NPDES permits require postconstruction runoff (post-project hydrology) to match the preconstruction runoff (pre-project hydrology) with the installation of postconstruction stormwater management measures. The NPDES permits emphasize runoff reduction through on-site stormwater use, interception, evapotranspiration, and infiltration through nonstructural controls, such as Low Impact Development (LID) practices, and conversation design measures. Stormwater volume that cannot be addressed using nonstructural practices is required to be captured in structural practices and be approved by the enforcing agency.

Refer to the current applicable permits on the State Water Resources Control Board website at: www.waterboards.ca.gov/constructionstormwater. Consideration to the stormwater runoff management measures should be given during the initial design process for appropriate integration into site development.

5.106.4 BICYCLE PARKING. For buildings within the authority of California Building Standards Commission as specified in Section 103, comply with Section 5.106.4.1. For buildings within the authority of the Division of the State Architect pursuant to Section 105, comply with Section 5.106.4.2

5.106.4.1 Bicycle parking. [BSC-CG] Comply with Sections 5.106.4.1.1 and 5.106.4.1.2; or meet the applicable local ordinance, whichever is stricter.

5.106.4.1.1 Short-term bicycle parking. If the new project or an addition or alteration is anticipated to generate visitor traffic, provide permanently anchored bicycle racks within 200 feet of the visitors' entrance, readily visible to passers-by, for 5% of new visitor motorized vehicle parking spaces being added, with a minimum of one two-bike capacity rack.
Exception: Additions or alterations which add nine or less visitor vehicular parking spaces.

5.106.4.1.2 Long-term bicycle parking. For new buildings with tenant spaces that have 10 or more tenant-occupants, provide secure bicycle parking for 5 percent of the tenant-occupant vehicular parking spaces with a minimum of one bicycle parking facility.

5.106.4.1.3 For additions or alterations that add 10 or more tenant-occupant vehicular parking spaces, provide secure bicycle parking for 5 percent of the tenant vehicular parking spaces being added, with a minimum of one bicycle parking facility.

5.106.4.1.4 For new shell buildings in phased projects provide secure bicycle parking for 5 percent of the anticipated tenant-occupant vehicular parking spaces with a minimum of one bicycle parking facility.

5.106.4.1.5 Acceptable bicycle parking facility for Sections 5.106.4.1.2, 5.106.4.1.3, and 5.106.4.1.4 shall be convenient from the street and shall meet one of the following:

1. Covered, lockable enclosures with permanently anchored racks for bicycles;
2. Lockable bicycle rooms with permanently anchored racks; or
3. Lockable, permanently anchored bicycle lockers.

Note: Additional information on recommended bicycle accommodations may be obtained from Sacramento Area Bicycle Advocates.

5.106.4.2 Bicycle parking. [DSA-SS] For public schools and community colleges, comply with Sections 5.106.4.2.1 and 5.106.4.2.2

5.106.4.2.1 Student bicycle parking. Provide permanently anchored bicycle racks conveniently accessed with a minimum of four two-bike capacity racks per new building.
5.106.4.2.2 Staff bicycle parking. Provide permanent, secure bicycle parking conveniently accessed with a minimum of two staff bicycle parking spaces per new building. Acceptable bicycle parking facilities shall be convenient from the street or staff parking area and shall meet one of the following:

1. Covered, lockable enclosures with permanently anchored racks for bicycles;
2. Lockable bicycle rooms with permanently anchored racks; or
3. Lockable, permanently anchored bicycle lockers.

5.106.5.2 DESIGNATED PARKING FOR CLEAN AIR VEHICLES. In new projects or additions or alterations that add 10 or more vehicular parking spaces, provide designated parking for any combination of low-emitting, fuel-efficient and carpool/van pool vehicles as follows:

TABLE 5.106.5.2 - PARKING

TOTAL NUMBER OF PARKING SPACES	NUMBER OF REQUIRED SPACES
0-9	0
10-25	1
25-50	3
51-75	6
76-100	8
101-150	11
151-200	16
201 AND OVER	AT LEAST 8% OF TOTAL

5.106.5.2.1 - Parking stall marking. Paint, in the paint used for stall striping, the following characters such that the lower edge of the last word aligns with the end of the stall striping and is visible beneath a parked vehicle: CLEAN AIR / VAN POOL / EV

Note: Vehicles bearing Clean Air Vehicle stickers from expired HOV lane programs may be considered eligible for designated parking spaces.

5.106.5.3 Electric vehicle (EV) charging. [N] Construction shall comply with Section 5.106.5.3.1 or Section 5.106.5.3.2 to facilitate future installation of electric vehicle supply equipment (EVSE). When EVSE(s) is/are installed, it shall be in accordance with the *California Building Code*, the *California Electrical Code* and as follows:

5.106.5.3.1 Single charging space requirements. [N] When only a single charging space is required per Table 5.106.5.3.3, a raceway is required to be installed at the time of construction and shall be installed in accordance with the *California Electrical Code*. Construction plans and specifications shall include, but are not limited to, the following:

1. The type and location of the EVSE.
2. A listed raceway capable of accommodating a 208/240 -volt dedicated branch circuit.
3. The raceway shall not be less than trade size 1".
4. The raceway shall originate at a service panel or a subpanel serving the area, and shall terminate in close proximity to the proposed location of the charging equipment and listed suitable cabinet, box, enclosure or equivalent.
5. The service panel or subpanel shall have sufficient capacity to accommodate a minimum 40-ampere dedicated branch circuit for the future installation of the EVSE.

5.106.5.3.2 Multiple charging space requirements. [N] When multiple charging spaces are required per Table 5.106.5.3.3 raceway(s) is/are required to be installed at the time of construction and shall be installed in accordance with the *California Electrical Code*. Construction plans and specifications shall include, but are not limited to, the following:

1. The type and location of the EVSE.
2. The raceway(s) shall originate at a service panel or a subpanel(s) serving the area, and shall terminate in close proximity to the proposed location of the charging equipment and into listed suitable cabinet(s), box(es), enclosure(s) or equivalent.
3. Plan design shall be based upon 40-ampere minimum branch circuits.
4. Electrical calculations shall substantiate the design of the electrical system, to include the rating of equipment and any on-site distribution transformers and have sufficient capacity to simultaneously charge all required EVs at its full rated amperage.
5. The service panel or subpanel(s) shall have sufficient capacity to accommodate the required number of dedicated branch circuit(s) for the future installation of the EVSE.

5.106.5.3.3 EV charging space calculations. [N] Table 5.106.5.3.3 shall be used to determine if single or multiple charging space requirements apply for the future installation of EVSE.

Exceptions: On a case-by-case basis where the local enforcing agency has determined EV charging and infrastructure is not feasible based upon one or more of the following conditions:

1. Where there is insufficient electrical supply.
2. Where there is evidence suitable to the local enforcing agency substantiating that additional local utility infrastructure design requirements, directly related to the implementation of Section 5.106.5.3, may adversely impact the construction cost of the project.

TABLE 5.106.5.3.3

TOTAL NUMBER OF PARKING SPACES	NUMBER OF REQUIRED SPACES
0-9	0
10-25	1
26-50	2
51-75	4
76-100	5
101-150	7
151-200	10
201 AND OVER	6% of total[1]

1. Calculation for spaces shall be rounded up to the nearest whole number.

5.106.5.3.4 [N] Identification. The service panel or subpanel(s) circuit directory shall identify the reserved overcurrent protective device space(s) for future EV charging as "EV CAPABLE". The raceway termination location shall be permanently and visibly marked as "EV CAPABLE".

5.106.5.3.5 [N] Future charging spaces qualify as designated parking as described in Section 5.106.5.2 Designated parking for clean air vehicles.

5.106.8 LIGHT POLLUTION REDUCTION. [N].I Outdoor lighting systems shall be designed and installed to comply with the following:

1. The minimum requirements in the California Energy Code for Lighting Zones 0-4 as defined in Chapter 10, Section 10-114 of the California Administrative Code; and
2. Backlight (B) ratings as defined in IES TM-15-11 (shown in Table A-1 in Chapter 8);
3. Uplight and Glare ratings as defined in California Energy Code (shown in Tables 130.2-A and 130.2-B in Chapter 8) and
4. Allowable BUG ratings not exceeding those shown in Table 5.106.8, [N] or Comply with a local ordinance lawfully enacted pursuant to Section 101.7, whichever is more stringent.

Exceptions: [N]

1. Luminaires that qualify as exceptions in Section 140.7 of the California Energy Code.
2. Emergency lighting.
3. Building facade meeting the requirements in Table 140.7-B of the California Energy Code, Part 6.
4. Custom lighting features as allowed by the local enforcing agency, as permitted by Section 101.8 Alternate materials, designs and methods of construction.

Note: [N]
1. See also California Building Code, Chapter 12, Section 1205.6 for college campus lighting requirements for parking facilities and walkways.
2. Refer to Chapter 8 (Compliance Forms, Worksheets and Reference Material) for IES TM-15-11 Table A-1, California Energy Code Tables 130.2-A and 130.2-B.
3. Refer to the California Building Code for requirements for additions and alterations.

TABLE 5.106.8 [N] MAXIMUM ALLOWABLE BACKLIGHT, UPLIGHT AND GLARE (BUG) RATINGS 1,2

ALLOWABLE RATING	LIGHTING ZONE LZ0	LIGHTING ZONE LZ1	LIGHTING ZONE LZ2	LIGHTING ZONE LZ3	LIGHTING ZONE LZ4
MAXIMUM ALLOWABLE BACKLIGHT RATING 3					
Luminaire greater than 2 mounting heights (MH) from property line	N/A	No Limit	No Limit	No Limit	No Limit
Luminaire back hemisphere is 1-2 MH from property line	N/A	B2	B3	B4	B4
Luminaire back hemisphere is 0.5-1 MH from property line	N/A	B1	B2	B3	B3
Luminaire back hemisphere is less than 0.5 MH from property line	N/A	B0	B0	B1	B2
MAXIMUM ALLOWABLE UPLIGHT RATING (U)					
For area lighting 4	N/A	U0	U0	U0	U0
For all other outdoor lighting,including decorative luminaires	N/A	U1	U2	U3	UR
MAXIMUM ALLOWABLE GLARE RATING 3 (G)					
Luminaire greater than 2 MH from property line	N/A	G1	G2	G3	G4
Luminaire front hemisphere is 1-2 MH from property line	N/A	G0	G1	G1	G2
Luminaire front hemisphere is 0.5-1 MH from property line	N/A	G0	G0	G1	G1
Luminaire back hemisphere is less than 0.5 MH from property line	N/A	G0	G0	G0	G1

1. IESNA Lighting Zones 0 and 5 are not applicable; refer to Lighting Zones as defined in the *California Energy Code* and Chapter 10 of the *California Administrative Code*.

2. For property lines that abut public walkways, bikeways, plazas and parking lots, the property line may be considered to be 5 feet beyond the actual property line for purpose of determining compliance with this section. For property lines that abut public roadways and public transit corridors, the property line may be considered to be the centerline of the public roadway or public transit corridor for the purpose of determining compliance with this section.

3. If the nearest property line is less than or equal to two mounting heights from the back hemisphere of the luminaire distribution, the applicable reduced Backlight rating shall be met.

4. General lighting luminaires in areas such as outdoor parking, sales or storage lots shall meet these reduced ratings. Decorative luminaires located in these areas shall meet *U*-value limits for "all other outdoor lighting".

5. If the nearest property line is less than or equal to two mounting heights from the front hemisphere of the luminaire distribution, the applicable reduced Glare rating shall be met.

5.106.10 GRADING AND PAVING. Construction plans shall indicate how site grading or a drainage system will manage all surface water flows to keep water from entering buildings. Examples of methods to manage surface water include, but are not limited to, the following:

1. Swales.
2. Water collection and disposal systems.
3. French drains.
4. Water retention gardens.
5. Other water measures which keep surface water away from buildings and aid in groundwater recharge.

Exception: Additions and alterations not altering the drainage path.

5.106.12 SHADE TREES [DSA-SS]. Shade Trees shall be planted to comply with Sections 5.106.12.1, 5.106.12.2, and 5.106.12.3. Percentages shown shall be measured at noon on the summer solstice. Landscape irrigation necessary to establish and maintain tree health shall comply with Section 5.304.6.

5.106.12.1 Surface parking areas. Shade tree plantings, minimum #10 container size or equal, shall be installed to provide shade over 50 percent of the parking area within 15 years.

Exceptions: The surface parking area covered by solar photovoltaic shade structures, or shade structures, with roofing materials that comply with Table A5.106.11.2.2 in Appendix A5, are not included in the total area calculations.

5.106.12.2 Landscape areas. Shade tress plantings, minimum #10 container size or equal shall be installed to provide shade of 20% of the landscape area within 15 years.

Exceptions: Playfields for organized sport activity are not included in the total area calculation.

5.106.12.3. Hardscape areas. Shade tree plantings, minimum #10 container size or equal shall be installed to provide shade over 20 percent of the hardscape area within 15 years.

Exceptions: Walks, hardscape areas covered by solar photovoltaic shade structures, and hardscape areas covered by shade structures with roofing materials that comply with Table A5.106.11.2.2 in Appendix A5, are not included in the total area calculation.

DIVISION 5.2 ENERGY EFFICIENCY

SECTION 5.201 GENERAL
5.201.1 Scope [BSC-CG]. *California Energy Code [DSA-SS]*. For the purposes of mandatory energy efficiency standards in this code, the California Energy Commission will continue to adopt mandatory building standards.

DIVISION 5.3 WATER EFFICIENCY AND CONSERVATION

SECTION 5.301 GENERAL
5.301.1 Scope. The provisions of this chapter shall establish the means of conserving water use indoors, outdoors and in wastewater conveyance.

SECTION 5.302 DEFINITIONS
5.302.1 Definitions. The following terms are defined in Chapter 2 *(and are included here for reference)*

EVAPOTRANSPIRATION ADJUSTMENT FACTOR (ETAF) [DSA-SS]. An adjustment factor when applied to reference evapotranspiration that adjusts for plant factors and irrigation efficiency, which as two major influences on the amount of water that needs to be applied to the landscape.

FOOTPRINT AREA [DSA-SS]. The total area of the furthest exterior wall of the structure projected to natural grade, not including exterior areas such as stairs, covered walkways, patios and decks.

METERING FAUCET. A self-closing faucet that dispenses a specific volume of water for each actuation cycle. The volume or cycle duration can be fixed or adjustable.

GRAYWATER. Pursuant to Health and Safety Code Section 17922.12, "graywater" means untreated wastewater that has not been contaminated by any toilet discharge, has not been affected by infectious, contaminated, or unhealthy bodily wastes, and does not present a threat from contamination by unhealthful processing, manufacturing, or operating wastes. "Graywater" includes, but is not limited to wastewater from bathtubs, showers, bathroom washbasins, clothes washing machines and laundry tubs, but does not include waste water from kitchen sinks or dishwashers.

MODEL WATER EFFICIENT LANDSCAPE ORDINANCE (MWELO). The California ordinance regulating landscape design, installation and maintenance practices that will ensure commercial, multifamily and other developer installed landscapes greater than 2500 square feet meet an irrigation water budget developed based on landscaped area and climatological parameters.

MODEL WATER EFFICIENT LANDSCAPE ORDINANCE (MWELO). [HCD] The California model ordinance (California Code of Regulations, Title 23, Division 2, Chapter 2.7), regulating landscape design, installation and maintenance practices. Local agencies are required to adopt the updated MWELO, or adopt a local ordinance at least as effective as the MWELO.

POTABLE WATER. Water that is drinkable and meets the U.S. Environmental Protection Agency (EPA) Drinking Water Standards. See definition in the California Plumbing Code, Part 5.

POTABLE WATER. [HCD] Water that is satisfactory for drinking, culinary, and domestic puroses, and meets the U.S. Environmental Protection Agency (EPA) Drinking Water Standards and the requirements of the Health Authority Having Jurisdiction.

RECYCLED WATER. Water which, as a result of treatment of waste, is suitable for a direct beneficial use or a controlled use that would not otherwise occur [Water Code Section 13050 (n)]. Simply put, recycled water is water treated to remove waste matter attaining a quality that is suitable to use the water again.

SUBMETER. A meter installed subordinate to a site meter. Usually used to measure water intended for one purpose, such as landscape irrigation. For the purposes of CALGreen, a dedicated meter may be considered a submeter.

WATER BUDGET. Is the estimated total landscape irrigation water use which shall not exceed the maximum applied water allowance calculated in accordance with the Department of Water Resources Model Efficient Landscape Ordinance (MWELO).

SECTION 5.303 INDOOR WATER USE
5.303.1 METERS. Separate submeters or metering devices shall be installed for the uses described in Sections 503.1.1 and 503.1.2.

5.303.1.1 Buildings in excess of 50,000 square feet. Separate submeters shall be installed as follows:

1. For each individual leased, rented or other tenant space within the building projected to consume more than 100 gal/day (380 L/day), including, but not limited to, spaces used for laundry or cleaners, restaurant or food service, medical or dental office, laboratory, or beauty salon or barber shop.
2. Where separate submeters for individual building tenants are unfeasible, for water supplied to the following subsystems:
   a. Makeup water for cooling towers where flow through is greater than 500 gpm (30 L/s).
   b. Makeup water for evaporative coolers greater than 6 gpm (0.04 L/s).
   c. Steam and hot water boilers with energy input more than 500,000 Btu/h (147 kW).

5.303.1.2 Excess consumption. A separate submeter or metering device shall be provided for any tenant within a new building or within an addition that is projected to consume more than 1,000 gal/day.

5.303.3 WATER CONSERVING PLUMBING FIXTURES AND FITTINGS. Plumbing fixtures (water closets and urinals) and fittings (faucets and showerheads) shall comply with the following:

5.303.3.1 Water Closets. The effective flush volume of all water closets shall not exceed 1.28 gallons per flush. Tank-type water closets shall be certified to the performance criteria of the U.S. EPA WaterSense Specification for Tank-Type toilets.

Note: The effective flush volume of dual flush toilets is defined as the composite, average flush volume of two reduced flushes and one full flush.

5.303.3.2 Urinals.
5.303.3.2.1 Wall-mounted Urinals. The effective flush volume of wall-mounted urinals shall not exceed 0.125 gallons per flush.

5.303.3.2.2 Floor-mounted Urinals. The effective flush volume of floor-mounted or other urinals shall not exceed 0.5 gallons per flush.

5.303.3.3 Showerheads. [BSC-CG]
5.303.3.3.1 Single showerhead. Showerheads shall have a maximum flow rate of not more than 1.8 gallons per minute at 80 psi. Showerheads shall be certified to the performance criteria of the U.S. EPA WaterSense Specification for Showerheads.

5.303.3.3.2 Multiple showerheads serving one shower. When a shower is served by more than one showerhead, the combined flow rate of all the showerheads and/or other shower outlets controlled by a single valve shall not exceed 1.8 gallons per minute at 80 psi, or the shower shall be designed to allow only one shower outlet to be in operation at a time.
Note: A hand-held shower shall be considered a showerhead.

ARCH.

PROJECT MANAGEMENT

ALAMEIDA ARCHITECTURE

CONSTRUCTION MANAGEMENT

555 S. MAIN STREET, SUITE 2
SEBASTOPOL, CA 95472
(707) 824-1219
WWW.ALAMEIDA.COM

PROJECT

TENANT IMPROVEMENTS FOR ECONOMIC DEVELOPMENT AND CHILD SUPPORT SERVICES

2420 6TH STREET
EUREKA, CA

REGISTERED ARCHITECT
DONALD R. ALMEIDA
C-19767
Exp. 11/30/23
STATE OF CALIFORNIA

No.	Description	Date
1.	PLAN CHECK COMMENTS	12/12/22

CAL GREEN CHECKLIST

Project number	2108
Date	5/8/22
Drawn by	Author
Checked by	Checker

CG-1

Scale

5/2/2023 4:55:18 PM

2019 CALIFORNIA GREEN BUILDING STANDARDS CODE
NONRESIDENTIAL MANDATORY MEASURES, SHEET 1 (January 2020, Includes August 2019 Supplement)

AIA California

Y = YES
N/A = NOT APPLICABLE
RESPON. PARTY = RESPONSIBLE PARTY (ie: ARCHITECT, ENGINEER, OWNER, CONTRACTOR, INSPECTOR ETC.)

5.303.3.4 Faucets and fountains.

5.303.3.4.1 Nonresidential Lavatory faucets. Lavatory faucets shall have a maximum flow rate of not more than 0.5 gallons per minute at 60 psi.

5.303.3.4.2 Kitchen faucets. Kitchen faucets shall have a maximum flow rate of not more than 1.8 gallons per minute at 60 psi. Kitchen faucets may temporarily increase the flow above the maximum rate, but not to exceed 2.2 gallons per minute at 60 psi, and must default to a maximum flow rate of 1.8 gallons per minute at 60 psi.

5.303.3.4.3 Wash fountains. Wash fountains shall have a maximum flow rate of not more than1.8 gallons per minute/20 [rim space (inches) at 60 psi].

5.303.3.4.4 Metering faucets. Metering faucets shall not deliver more than 0.20 gallons per cycle.

5.303.3.4.5 Metering faucets for wash fountains. Metering faucets for wash fountains shall have a maximum flow rate of not more than 0.20 gallons per minute/20 [rim space (inches) at 60 psi].

Note: Where complying faucets are unavailable, aerators or other means may be used to achieve reduction.

5.303.4 COMMERCIAL KITCHEN EQUIPMENT.

5.303.4.1 Food Waste Disposers. Disposers shall either modulate the use of water to no more than 1 gpm when the disposer is not in use (not actively grinding food waste/no-load) or shall automatically shut off after no more than 10 minutes of inactivity. Disposers shall use no more than 8 gpm of water.
Note: This code section does not affect local jurisdiction authority to prohibit or require disposer installation.

5.303.5 AREAS OF ADDITION OR ALTERATION. For those occupancies within the authority of the California Building Standards Commission as specified in Section 103, the provisions of Section 5.303.3 and 5.303.4 shall apply to new fixtures in additions or areas of alteration to the building.

ARCH.

5.303.6 STANDARDS FOR PLUMBING FIXTURES AND FITTINGS. Plumbing fixtures and fittings shall be installed in accordance with the *California Plumbing Code*, and shall meet the applicable standards referenced in Table 1701.1 of the *California Plumbing Code* and in Chapter 6 of this code.

ARCH.

SECTION 5.304 OUTDOOR WATER USE
5.304.1 OUTDOOR POTABLE WATER USE IN LANDSCAPE AREAS. Nonresidential developments shall comply with a local water efficient landscape ordinance or the current California Department of Water Resources' Model Water Efficient Landscape Ordinance (MWELO), whichever is more stringent.

Notes:
1. The Model Water Efficient Landscape Ordinance (MWELO) is located in the California Code of Regulations, Title 23, Chapter 2.7, Division 2.
2. MWELO and supporting documents, including a water budget calculator, are available at: https://www.water.ca.gov/.

5.304.6 OUTDOOR POTABLE WATER USE IN LANDSCAPE AREAS. For public schools and community colleges, landscape projects as described in Sections 5.304.6.1 and 5.304.6.2 shall comply with the California Department of Water Resources Model Water Efficient Landscape Ordinance (MWELO) commencing with Section 490 of Chapter 2.7, Division 2, Title 23, California Code of Regulations, except that the evapotranspiration adjustment factor (ETAF) shall be 0.65 with an additional water allowance for special landscape areas (SLA) of 0.35.

Exception: Any project with an aggregate landscape area of 2,500 square feet or less may comply with the prescriptive measures contained in Appendix D of the MWELO.

5.304.6.1 Newly constructed landscapes. New construction projects with an aggregate landscape area equal to or greater than 500 square feet.

5.304.6.2 Rehabilitated landscapes. Rehabilitated landscape projects with an aggregate landscape area equal to or greater than 1,200 square feet.

DIVISION 5.4 MATERIAL CONSERVATION AND RESOURCE EFFICIENCY

SECTION 5.401 GENERAL
5.401.1 SCOPE. The provisions of this chapter shall outline means of achieving material conservation and resource efficiency through protection of buildings from exterior moisture, construction waste diversion, employment of techniques to reduce pollution through recycling of materials, and building commissioning or testing and adjusting.

SECTION 5.402 DEFINITIONS
5.402.1 DEFINITIONS. The following terms are defined in Chapter 2 *(and are included here for reference)*

ADJUST. To regulate fluid flow rate and air patterns at the terminal equipment, such as to reduce fan speed or adjust a damper.

BALANCE. To proportion flows within the distribution system, including sub-mains, branches and terminals, according to design quantities.

BUILDING COMMISSIONING. A systematic quality assurance process that spans the entire design and construction process, including verifying and documenting that building systems and components are planned, designed, installed, tested, operated and maintained to meet the owner's project requirements.

ORGANIC WASTE. Food waste, green waste, landscape and pruning wste, nonhazardous wood waste, and food soiled paper waste that is mixed in with food waste.

TEST. A procedure to determine quantitative performance of a system or equipment

SECTION 5.407 WATER RESISTANCE AND MOISTURE MANAGEMENT
5.407.1 WEATHER PROTECTION. Provide a weather-resistant exterior wall and foundation envelope as required by California Building Code Section 1402.2 (Weather Protection), manufacturer's installation instructions or local ordinance, whichever is more stringent.

5.407.2 MOISTURE CONTROL. Employ moisture control measures by the following methods.

5.407.2.1 Sprinklers. Design and maintain landscape irrigation systems to prevent spray on structures.

5.407.2.2 Entries and openings. Design exterior entries and/or openings subject to foot traffic or wind-driven rain to prevent water intrusion into buildings as follows:

5.407.2.2.1 Exterior door protection. Primary exterior entries shall be covered to prevent water intrusion by using nonabsorbent floor and wall finishes within at least 2 feet around and perpendicular to such openings plus at least one of the following:

1. An installed awning at least 4 feet in depth.
2. The door is protected by a roof overhang at least 4 feet in depth.
3. The door is recessed at least 4 feet.
4. Other methods which provide equivalent protection.

5.407.2.2.2 Flashing. Install flashings integrated with a drainage plane.

SECTION 5.408 CONSTRUCTION WASTE REDUCTION, DISPOSAL AND RECYCLING
5.408.1 CONSTRUCTION WASTE MANAGEMENT. Recycle and/or salvage for reuse a minimum of 65% of the non-hazardous construction and demolition waste in accordance with Section 5.408.1.1, 5.408.1.2 or 5.408.1.3; or meet a local construction and demolition waste management ordinance, whichever is more stringent.

G.C.

5.408.1.1 Construction waste management plan. Where a local jurisdiction does not have a construction and demolition waste management ordinance, submit a construction waste management plan that:

1. Identifies the construction and demolition waste materials to be diverted from disposal by efficient usage, recycling, reuse on the project or salvage for future use or sale.
2. Determines if construction and demolition waste materials will be sorted on-site (source-separated) or bulk mixed (single stream).
3. Identifies diversion facilities where construction and demolition waste material collected will be taken.
4. Specifies that the amount of construction and demolition waste materials diverted shall be calculated byweight or volume, but not by both.

5.408.1.2 Waste Management Company. Utilize a waste management company that can provide verifiable documentation that the percentage of construction and demolition waste material diverted from the landfill complies with this section.

Note: The owner or contractor shall make the determination if the construction and demolition waste material will be diverted by a waste management company.

Exceptions to Sections 5.408.1.1 and 5.408.1.2:

1. Excavated soil and land-clearing debris.
2. Alternate waste reduction methods developed by working with local agencies if diversion or recycle facilities capable of compliance with this item do not exist.
3. Demolition waste meeting local ordinance or calculated in consideration of local recycling facilities and markets.

5.408.1.3 Waste stream reduction alternative. The combined weight of new construction disposal that does not exceed two pounds per square foot of building area may be deemed to meet the 65% minimum requirement as approved by the enforcing agency.

5.408.1.4 Documentation. Documentation shall be provided to the enforcing agency which demonstrates compliance with Sections 5.408.1.1, through 5.408.1.3. The waste management plan shall be updated as necessary and shall be accessible during construction for examination by the enforcing agency.

Notes:

1. Sample forms found in "A Guide to the California Green Building Standards Code (Nonresidential)" located at www.bsc.ca.gov/Home/CALGreen.aspx may be used to assist in documenting compliance with the waste management plan.
2. Mixed construction and demolition debris processors can be located at the California Department of Resources Recycling and Recovery (CalRecycle).

G.C.

5.408.2 UNIVERSAL WASTE. [A] Additions and alterations to a building or tenant space that meet the scoping provisions in Section 301.3 for nonresidential additions and alterations, shall require verification that Universal Waste items such as fluorescent lamps and ballast and mercury containing thermostats as well as other California prohibited Universal Waste materials are disposed of properly and are diverted from landfills. A list of prohibited Universal Waste materials shall be included in the construction documents.

Note: Refer to the Universal Waste Rule link at:
http://www.dtsc.ca.gov/LawsRegsPolicies/Regs/upload/OEAR-A_REGS_UWR_FinalText.pdf

5.408.3 EXCAVATED SOIL AND LAND CLEARING DEBRIS. 100 percent of trees, stumps, rocks and associated vegetation and soils resulting primarily from land clearing shall be reused or recycled. For a phased project, such material may be stockpiled on site until the storage site is developed.

Exception: Reuse, either on or off-site, of vegetation or soil contaminated by disease or pest infestation.

Notes:

1. If contamination by disease or pest infestation is suspected, contact the County Agricultural Commissioner and follow its direction for recycling or disposal of the material.
2. For a map of know pest and/or disease quarantine zones, consult with the California Department of Food and Agriculture. (www.cdfa.ca.gov)

SECTION 5.410 BUILDING MAINTENANCE AND OPERATIONS
5.410.1 RECYCLING BY OCCUPANTS. Provide readily accessible areas that serve the entire building and are identified for the depositing, storage and collection of non-hazardous materials for recycling, including (at a minimum) paper, corrugated cardboard, glass, plastics, organic waste, and metals or meet a lawfully enacted local recycling ordinance, if more restrictive.

TENANT

Exception: Rural jurisdictions that meet and apply for the exemption in Public Resources Code 42649.82 (a)(2)(A) et seq. shall also be exempt from the organic waste portion of this section.

5.410.1.1 Additions. All additions conducted within a 12-month period under single or multiple permits, resulting in an increase of 30% or more in floor area, shall provide recycling areas on site.

Exception: Additions within a tenant space resulting in less than a 30% increase in the tenant space floor area.

5.410.1.2 Sample ordinance. Space allocation for recycling areas shall comply with Chapter 18, Part 3, Division 30 of the *Public Resources Code*. Chapter 18 is known as the California Solid Waste Reuse and Recycling Access Act of 1991 (Act).

Note: A sample ordinance for use by local agencies may be found in Appendix A of the document at the CalRecycle's web site.

5.410.2 COMMISSIONING. [N] New buildings 10,000 square feet and over. For new buildings 10,000 square feet and over, building commissioning shall be included in the design and construction processes of the building project to verify that the building systems and components meet the owner's or owner representative's project requirements. Commissioning shall be performed in accordance with this section by trained personnel with experience on projects of comparable size and complexity. For I-occupancies that are not regulated by OSHPD or for I-occupancies and L-occupancies that are not regulated y the California Energy Code Section 100.0 Scope, all requirements in Sections 5.410.2 through 5.410.2.6 shall apply.

Note: For energy-related systems under the scope (Section 100) of the California Energy Code, including heating, ventilation, air conditioning (HVAC) systems and controls, indoor lighting systems and controls, as well as water heating systems and controls, refer to California Energy Code Section 120.8 for commissioning requirements

Commissioning requirements shall include:

1. Owner's or Owner representative's project requirements.
2. Basis of design.
3. Commissioning measures shown in the construction documents.
4. Commissioning plan.
5. Functional performance testing.
6. Documentation and training.
7. Commissioning report.

Exceptions:

1. Unconditioned warehouses of any size.
2. Areas less than 10,000 square feet used for offices or other conditioned accessory spaces within unconditioned warehouses.
3. Tenant improvements less than 10,000 square feet as described in Section 303.1.1.
4. Open parking garages of any size, or open parking garage areas, of any size, within a structure.

Note: For the purposes of this section, unconditioned shall mean a building, area, or room which does not provide heating and or air conditioning.

Informational Notes:

1. IAS AC 476 is an accreditation criteria for organizations providing training and/or certification of commissioning personnel. AC 476 is available to the Authority Having Jurisdiction as a reference for qualifications of commissioning personnel. AC 476 des not certify individuals to conduct functional performance tests or to adjust and balance systems.
2. Functional performance testing for heating, ventilation, air conditioning systems and lighting controls must be performed in compliance with the *California Energy Code*.

5.410.2.1 Owner's or Owner Representative's Project Requirements (OPR). [N] The expectations and requirements of the building appropriate to its phase shall be documented before the design phase of the project begins. This documentation shall include the following:
1. Environmental and sustainability goals.
2. Building sustainable goals.
3. Indoor environmental quality requirements.
4. Project program, including facility functions and hours of operation, and need for after hours operation.
5. Equipment and systems expectations.
6. Building occupant and operation and maintenance (O&M) personnel expectations.

5.410.2.2 Basis of Design (BOD). [N] A written explanation of how the design of the building systems meets the OPR shall be completed at the design phase of the building project. The Basis of Design document shall cover the following systems:

1. Renewable energy systems.
2. Landscape irrigation systems.
3. Water reuse system.

5.410.2.3 Commissioning plan. [N] Prior to permit issuance a commissioning plan shall be completed to document how the project will be commissioned. The commissioning plan shall include the following:
1. General project information.
2. Commissioning goals.
3. Systems to be commissioned. Plans to test systems and components shall include:
   a. An explanation of the original design intent.
   b. Equipment and systems to be tested, including the extent of tests.
   c. Functions to be tested.
   d. Conditions under which the test shall be performed.
   e. Measurable criteria for acceptable performance.
4. Commissioning team information.
5. Commissioning process activities, schedules and responsibilities. Plans for the completion of commissioning shall be included.

5.410.2.4 Functional performance testing. [N] Functional performance tests shall demonstrate the correct installation and operation of each component, system and system-to-system interface in accordance with the approved plans and specifications. Functional performance testing reports shall contain information addressing each of the building components tested, the testing methods utilized, and include any readings and adjustments made.

5.410.2.5 Documentation and training. [N] A Systems Manual and Systems Operations Training are required, including Occupational Safety and Health Act (OSHA) requirements in *California Code of Regulations* (CCR), Title 8, Section 5142, and other related regulations.

5.410.2.5.1 Systems manual. [N] Documentation of the operational aspects of the building shall be completed within the systems manual and delivered to the building owner or representative. The systems manual shall include the following:
1. Site information, including facility description, history and current requirements.
2. Site contact information.
3. Basic operations and maintenance, including general site operating procedures, basic troubleshooting, recommended maintenance requirements, site events log.
4. Major systems.
5. Site equipment inventory and maintenance notes.
6. A copy of verifications required by the enforcing agency or this code.
7. Other resources and documentation, if applicable.

5.410.2.5.2 Systems operations training. [N] A program for training of the appropriate maintenance staff for each equipment type and/or system shall be developed and documented in the commissioning report and shall include the following:
1. System/equipment overview (what it is, what it does and with what other systems and/or equipment it interfaces).
2. Review and demonstration of servicing/preventive maintenance.
3. Review of the information in the Systems Manual.
4. Review of the record drawings on the system/equipment.

5.410.2.6 Commissioning report. [N] A report of commissioning process activities undertaken through the design and construction phases of the building project shall be completed and provided to the owner or representative.

G.C.

5.410.4 TESTING AND ADJUSTING. New buildings less than 10,000 square feet. Testing and adjusting of systems shall be required for new buildings less than 10,000 square feet or new systems to serve an addition or alteration subject to Section 303.1.

5.410.4.2 (Reserved)

Note: For energy-related systems under the scope (Section 100) of the California Energy Code, including heating, ventilation, air conditioning (HVAC) systems and controls, indoor lighting system and controls, as well as water heating systems and controls, refer to California Energy Code Section 120.8 for commissioning requirements and Sections 120.5, 120.6, 130.4, and 140.9(b)3 for additional testing requirements of specific systems.

5.410.4.2 Systems. Develop a written plan of procedures for testing and adjusting systems. Systems to be included for testing and adjusting shall include at a minimum, as applicable to the project:

1. Renewable energy systems.
2. Landscape irrigation systems.
3. Water reuse systems.

5.410.4.3 Procedures. Perform testing and adjusting procedures in accordance with manufacturer's specifications and applicable standards on each system.

5.410.4.3.1 HVAC balancing. In addition to testing and adjusting, before a new space-conditioning system serving a building or space is operated for normal use, the system shall be balanced in accordance with the procedures defined by the Testing Adjusting and Balancing Bureau National Standards; the National Environmental Balancing Bureau Procedural Standards; Associated Air Balance Council National Standards or as approved by the enforcing agency.

5.410.4.4 Reporting. After completion of testing, adjusting and balancing, provide a final report of testing signed by the individual responsible for performing these services.

5.410.4.5 Operation and maintenance (O & M) manual. Provide the building owner or representative with detailed operating and maintenance instructions and copies of guaranties/warranties for each system. O & M instructions shall be consistent with OSHA requirements in CCR, Title 8, Section 5142, and other related regulations.

5.410.4.5.1 Inspections and reports. Include a copy of all inspection verifications and reports required by the enforcing agency.

DIVISION 5.5 ENVIRONMENTAL QUALITY
SECTION 5.501 GENERAL
5.501.1 SCOPE. The provisions of this chapter shall outline means of reducing the quantity of air contaminants that are odorous, irritating, and/or harmful to the comfort and well-being of a building's installers, occupants and neighbors.

SECTION 5.502 DEFINITIONS
5.502.1 DEFINITIONS. The following terms are defined in Chapter 2 *(and are included here for reference)*

ARTERIAL HIGHWAY. A general term denoting a highway primarily for through traffic usually on a continuous route.

A-WEIGHTED SOUND LEVEL (dBA). The sound pressure level in decibels as measured on a sound level meter using the internationally standardized A-weighting filter or as computed from sound spectral data to which A-weighting adjustments have been made.

1 BTU/HOUR. British thermal units per hour, also referred to as Btu. The amount of heat required to raise one pound of water one degree Fahrenheit per hour, a common measure of heat transfer rate. A ton of refrigeration is 12,000 Btu, the amount of heat required to melt a ton (2,000 pounds) of ice at 32° Fahrenheit.

COMMUNITY NOISE EQUIVALENT LEVEL (CNEL). A metric similar to the day-night average sound level (Ldn), except that a 5 decibel adjustment is added to the equivalent continuous sound exposure level for evening hours (7pm to 10pm) in addition to the 10 dB nighttime adjustment used in the Ldn.

COMPOSITE WOOD PRODUCTS. Composite wood products include hardwood plywood, particleboard and medium density fiberboard. "Composite wood products" does not include hardboard, structural plywood, structural panels, structural composite lumber, oriented strand board, glued laminated timber, timber, prefabricated wood I–joists or finger–jointed lumber, all as specified in California Code of Regulations (CCR), Title 17, Section 93120.1(a).

Note: See CCR, Title 17, Section 93120.1.

DAY-NIGHT AVERAGE SOUND LEVEL (Ldn). The A-weighted equivalent continuous sound exposure level for a 24-hour period with a 10 dB adjustment added to sound levels occurring during nighttime hours (10p.m. to 7 a.m.).

DECIBEL (db). A measure on a logarithmic scale of the magnitude of a particular quantity (such as sound pressure, sound power, sound intensity) with respect to a reference quantity.

ELECTRIC VEHICLE (EV). An automotive-type vehicle for on-road use, such as passenger automobiles, buses, trucks, vans, neighborhood electric vehicles, electric motorcycles, and the like, primarily powered by an electric motor that draws current from a rechargeable storage battery, fuel cell, photovoltaic array, or other source of electric current. Plug-in hybrid electric vehicles (PHEV) are considered electric vehicles. For purposes of the *California Electrical Code*, off-road, self-propelled electric vehicles, such as industrial trucks, hoists, lifts, transports, golf carts, airline ground support equipment, tractors, boats, and the like, are not included.

ELECTRIC VEHICLE CHARGING STATION(S) (EVCS)j. One or more spaces intended for charging electric vehicles.

ELECTRIC VEHICLE SUPPLY EQUIPMENT (EVSE). The conductors, including the ungrounded, grounded, and equipment grounding conductors and the electric vehicle connectors, attachment plugs, and all other fittings, devices, power outlets, or apparatus installed specifically for the purpose of transferring energy between the premises wiring and the electric vehicle.

ENERGY EQUIVALENT (NOISE) LEVEL (Leq). The level of a steady noise which would have the same energy as the fluctuating noise level integrated over the time of period of interest.

EXPRESSWAY. An arterial highway for through traffic which may have partial control of access, but which may or may not be divided or have grade separations at intersections.

FREEWAY. A divided arterial highway with full control of access and with grade separations at intersections.

GLOBAL WARMING POTENTIAL (GWP). The radiative forcing impact of one mass-based unit of a given greenhouse gas relative to an equivalent unit of carbon dioxide over a given period of time. Carbon dioxide is the reference compound with a GWP of one.

GLOBAL WARMING POTENTIAL VALUE (GWP VALUE). A 100-year GWP value published by the Intergovernmental Panel on Climate Change (IPCC) in either its Second Assessment Report (SAR) (IPCC, 1995); or its Fourth Assessment A-3 Report (AR4) (IPCC, 2007). The SAR GWP values are found in column "SAR (100-yr)" of Table 2.14.; the AR4 GWP values are found in column "100 yr" of Table 2.14.

HIGH-GWP REFRIGERANT. A compound used as a heat transfer fluid or gas that is: (a) a chlorofluorocarbon, a hdrochlorofluorocarbon, a hydrofluorocarbon, a perfluorocarbon, or any compound or blend of compounds, with a GWP value equal to or greater than 150, or (B) any ozone depleting substance as defined in Title 40 of the Code of Federal Regulations, Part 82, sec.82.3 (as amended March 10, 2009).

LONG RADIUS ELBOW. Pipe fitting installed between two lengths of pipe or tubing to allow a change of direction, with a radius 1.5 times the pipe diameter.

LOW-GWP REFRIGERANT. A compound used as a heat transfer fluid or gas that: (A) has a GWP value less than 150, and (B) is not an ozone depleting substance as defined in Title 40 of the Code of Federal Regulations, Part 82, sec.82.3 (as amended March 10, 2009).

MERV. Filter minimum efficiency reporting value, based on ASHRAE 52.2–1999.

MAXIMUM INCREMENTAL REACTIVITY (MIR). The maximum change in weight of ozone formed by adding a compound to the "Base REactive Organic Gas (ROG) Mixture" per weight of compound added, expressed to hundreths of a gram (g O^3/g ROC).

PRODUCT-WEIGHTED MIR (PWMIR). The sum of all weighted-MIR for all ingredients in a product subject to this article. The PWMIR is the total product reactivity expressed to hundredths of a gram of ozone formed per gram of product (excluding container and packaging).

PSIG. Pounds per square inch, guage.

REACTIVE ORGANIC COMPOUND (ROC). Any compound that has the potential, once emitted, to contribute to ozone formation in the troposphere.

SCHRADER ACCESS VALVES. Access fittings with a valve core installed.

SHORT RADIUS ELBOW. Pipe fitting installed between two lengths of pipe or tubing to allow a change of direction, with a radius 1.0 times the pipe diameter.

SUPERMARKET. For the purposes of Section 5.508.2, a supermarket is any retail food facility with 8,000 square feet or more conditioned area, and that utilizes either refrigerated display cases, or walk-in coolers or freezers connected to remote compressor units or condensing units.

VOC. A volatile organic compound broadly defined as a chemical compound based on carbon chains or rings with vapor pressures greater than 0.1 millimeters of mercury at room temperature. These compounds typically contain hydrogen and may contain oxygen, nitrogen and other elements. See CCR Title 17, Section 94508(a)

Note: Where specific regulations are cited from different agencies such as SCAQMD, ARB, etc., the VOC definition included in that specific regulation is the one that prevails for the specific measure in question.

SECTION 5.503 FIREPLACES
5.503.1 FIREPLACES. Install only a direct-vent sealed-combustion gas or sealed wood-burning fireplace, or a sealed woodstove or pellet stove, and refer to residential requirements in the California Energy Code, Title 24, Part 6, Subchapter 7, Section 150. Woodstoves, pellet stoves and fireplaces shall comply with applicable local ordinances.

5.503.1.1 Woodstoves. Woodstoves and pellet stoves shall comply with U.S. EPA New Source Performance Standards (NSPS) emission limits as applicable, and shall have a permanent label indicating they are certified to meet the emission limits.

SECTION 5.504 POLLUTANT CONTROL
G.C.

5.504.1 TEMPORARY VENTILATION. The permanent HVAC system shall only be used during construction if necessary to condition the building or areas of addition or alteration within the required temperature range for material and equipment installation. If the HVAC system is used during construction, use return air filters with a Minimum Efficiency Reporting Value (MERV) of 8, based on ASHRAE 52.2-1999, or an average efficiency of 30% based on ASHRAE 52.1-1992. Replace all filters immediately prior to occupancy, or, if the building is occupied during alteration, at the conclusion of construction.

G.C.

5.504.3 Covering of duct openings and protection of mechanical equipment during construction. At the time of rough installation and during storage on the construction site until final startup of the heating, cooling and ventilation equipment, all duct and other related air distribution component openings shall be covered with tape, plastic, sheetmetal or other methods acceptable to the enforcing agency to reduce the amount of dust, water and debris which may enter the system.

PROJECT MANAGEMENT

ALAMEIDA ARCHITECTURE

CONSTRUCTION MANAGEMENT

555 S. MAIN STREET, SUITE 2
SEBASTOPOL, CA 95472
(707) 824-1219
WWW.ALAMEIDA.COM

COUNTY OF HUMBOLDT – The Home of the Redwoods

PROJECT

TENANT IMPROVEMENTS FOR ECONOMIC DEVELOPMENT AND CHILD SUPPORT SERVICES

2420 6TH STREET
EUREKA, CA

REGISTERED ARCHITECT – DONALD R. ALAMEIDA – C-19767 – Exp. 11/30/23 – STATE OF CALIFORNIA

No.	Description	Date
1.	PLAN CHECK COMMENTS	12/12/22

CALGREEN CHECKLIST

Project number	2108
Date	5/8/22
Drawn by	Author
Checked by	Checker

CG-2

Scale

5/2/2023 4:55:28 PM

AIA California

2019 CALIFORNIA GREEN BUILDING STANDARDS CODE
NONRESIDENTIAL MANDATORY MEASURES, SHEET 1 (January 2020, Includes August 2019 Supplement)

Y = YES
N/A = NOT APPLICABLE
RESPON. PARTY = RESPONSIBLE PARTY (ie: ARCHITECT, ENGINEER OWNER, CONTRACTOR, INSPECTOR ETC.)

Y | N/A | RESPON. PARTY

X | ☐ | G.C. **5.504.4 FINISH MATERIAL POLLUTANT CONTROL.** Finish materials shall comply with Sections 5.504.4.1 through 5.504.4.6.

5.504.4.1 Adhesives, sealants and caulks. Adhesives, sealants, and caulks used on the project shall meet the requirements of the following standards:

1. Adhesives, adhesive bonding primers, adhesive primers, sealants, sealant primers and caulks shall comply with local or regional air pollution control or air quality management district rules where applicable, or SCAQMD Rule 1168 VOC limits, as shown in Tables 5.504.4.1 and 5.504.4.2. Such products also shall comply with the Rule 1168 prohibition on the use of certain toxic compounds (chloroform, ethylene dichloride, methylene chloride, perchloroethylene and trichloroethylene), except for aerosol products as specified in subsection 2, below.
2. Aerosol adhesives, and smaller unit sizes of adhesives, and sealant or caulking compounds (in units of product, less packaging, which do not weigh more than one pound and do not consist of more than 16 fluid ounces) shall comply with statewide VOC standards and other requirements, including prohibitions on use of certain toxic compounds, of *California Code of Regulations*, Title 17, commencing with Section 94507.

TABLE 5.504.4.1 - ADHESIVE VOC LIMIT[1,2]
Less Water and Less Exempt Compounds in Grams per Liter

ARCHITECTURAL APPLICATIONS	CURRENT VOC LIMIT
INDOOR CARPET ADHESIVES	50
CARPET PAD ADHESIVES	50
OUTDOOR CARPET ADHESIVES	150
WOOD FLOORING ADHESIVES	100
RUBBER FLOOR ADHESIVES	60
SUBFLOOR ADHESIVES	50
CERAMIC TILE ADHESIVES	65
VCT & ASPHALT TILE ADHESIVES	50
DRYWALL & PANEL ADHESIVES	50
COVE BASE ADHESIVES	50
MULTIPURPOSE CONSTRUCTION ADHESIVES	70
STRUCTURAL GLAZING ADHESIVES	100
SINGLE-PLY ROOF MEMBRANE ADHESIVES	250
OTHER ADHESIVES NOT SPECIFICALLY LISTED	50
SPECIALTY APPLICATIONS	
PVC WELDING	510
CPVC WELDING	490
ABS WELDING	325
PLASTIC CEMENT WELDING	250
ADHESIVE PRIMER FOR PLASTIC	550
CONTACT ADHESIVE	80
SPECIAL PURPOSE CONTACT ADHESIVE	250
STRUCTURAL WOOD MEMBER ADHESIVE	140
TOP & TRIM ADHESIVE	250
SUBSTRATE SPECIFIC APPLICATIONS	
METAL TO METAL	30
PLASTIC FOAMS	50
POROUS MATERIAL (EXCEPT WOOD)	50
WOOD	30
FIBERGLASS	80

1. IF AN ADHESIVE IS USED TO BOND DISSIMILAR SUBSTRATES TOGETHER, THE ADHESIVE WITH THE HIGHEST VOC CONTENT SHALL BE ALLOWED.
2. FOR ADDITIONAL INFORMATION REGARDING METHODS TO MEASURE THE VOC CONTENT SPECIFIED IN THIS TABLE, SEE SOUTH COAST AIR QUALITY MANAGEMENT DISTRICT RULE 1168, www.arb.ca.gov/DRDB/SC/CURHTML/R1168.PDF

TABLE 5.504.4.2 - SEALANT VOC LIMIT
Less Water and Less Exempt Compounds in Grams per Liter

SEALANTS	CURRENT VOC LIMIT
ARCHITECTURAL	250
MARINE DECK	760
NONMEMBRANE ROOF	300
ROADWAY	250
SINGLE-PLY ROOF MEMBRANE	450
OTHER	420
SEALANT PRIMERS	
ARCHITECTURAL	
NONPOROUS	250
POROUS	775
MODIFIED BITUMINOUS	500
MARINE DECK	760
OTHER	750

NOTE: FOR ADDITIONAL INFORMATION REGARDING METHODS TO MEASURE THE VOC CONTENT SPECIFIED IN THESE TABLES, SEE SOUTH COAST AIR QUALITY MANAGEMENT DISTRICT RULE 1168.

5.504.4.3 Paints and coatings. Architectural paints and coatings shall comply with VOC limits in Table 1 of the ARB Architectural Coatings Suggested Control Measure, as shown in Table 5.504.4.3, unless more stringent local limits apply. The VOC content limit for coatings that do not meet the definitions for the specialty coatings categories listed in Table 5.504.4.3 shall be determined by classifying the coating as a Flat, Nonflat or Nonflat-High Gloss coating, based on its gloss, as defined in Subsections 4.21, 4.36 and 4.37 of the 2007 California Air Resources Board Suggested Control Measure, and the corresponding Flat, Nonflat or Nonflat-High Gloss VOC limit in Table 5.504.4.3 shall apply.

5.504.4.3.1 Aerosol Paints and coatings. Aerosol paints and coatings shall meet the PWMIR Limits for ROC in Section 94522(a)(3) and other requirements, including prohibitions on use of certain toxic compounds and ozone depleting substances, in Sections 94522(c)(2) and (d)(2) of *California Code of Regulations*, Title 17, commencing with Section 94520; and in areas under the jurisdiction of the Bay Area Air Quality Management District additionally comply with the percent VOC by weight of product limits of Regulation 8 Rule 49.

Y | N/A | RESPON. PARTY

TABLE 5.504.4.3 - VOC CONTENT LIMITS FOR ARCHITECTURAL COATINGS[2,3]
GRAMS OF VOC PER LITER OF COATING, LESS WATER & LESS EXEMPT COMPOUNDS

COATING CATEGORY	CURRENT VOC LIMIT
FLAT COATINGS	50
NONFLAT COATINGS	100
NONFLAT HIGH GLOSS COATINGS	150
SPECIALTY COATINGS	
ALUMINUM ROOF COATINGS	400
BASEMENT SPECIALTY COATINGS	400
BITUMINOUS ROOF COATINGS	50
BITUMINOUS ROOF PRIMERS	350
BOND BREAKERS	350
CONCRETE CURING COMPOUNDS	350
CONCRETE/MASONRY SEALERS	100
DRIVEWAY SEALERS	50
DRY FOG COATINGS	150
FAUX FINISHING COATINGS	350
FIRE RESISTIVE COATINGS	350
FLOOR COATINGS	100
FORM-RELEASE COMPOUNDS	250
GRAPHIC ARTS COATINGS (SIGN PAINTS)	500
HIGH-TEMPERATURE COATINGS	420
INDUSTRIAL MAINTENANCE COATINGS	250
LOW SOLIDS COATINGS[1]	120
MAGNESITE CEMENT COATINGS	450
MASTIC TEXTURE COATINGS	100
METALLIC PIGMENTED COATINGS	500
MULTICOLOR COATINGS	250
PRETREATMENT WASH PRIMERS	420
PRIMERS, SEALERS, & UNDERCOATERS	100
REACTIVE PENETRATING SEALERS	350
RECYCLED COATINGS	250
ROOF COATINGS	50
RUST PREVENTATIVE COATINGS	250
SHELLACS:	
CLEAR	730
OPAQUE	550
SPECIALTY PRIMERS, SEALERS & UNDERCOATERS	100
STAINS	250
STONE CONSOLIDANTS	450
SWIMMING POOL COATINGS	340
TRAFFIC MARKING COATINGS	100
TUB & TILE REFINISH COATINGS	420
WATERPROOFING MEMBRANES	250
WOOD COATINGS	275
WOOD PRESERVATIVES	350
ZINC-RICH PRIMERS	340

1. GRAMS OF VOC PER LITER OF COATING, INCLUDING WATER & EXEMPT COMPOUNDS
2. THE SPECIFIED LIMITS REMAIN IN EFFECT UNLESS REVISED LIMITS ARE LISTED IN SUBSEQUENT COLUMNS IN THE TABLE.
3. VALUES IN THIS TABLE ARE DERIVED FROM THOSE SPECIFIED BY THE CALIFORNIA AIR RESOURCES BOARD, ARCHITECTURAL COATINGS SUGGESTED CONTROL MEASURE, FEB. 1, 2008. MORE INFORMATION IS AVAILABLE FROM THE AIR RESOURCES BOARD.

5.504.4.3.2 Verification. Verification of compliance with this section shall be provided at the request of the enforcing agency. Documentation may include, but is not limited to, the following:

1. Manufacturer's product specification
2. Field verification of on-site product containers

5.504.4.4 Carpet Systems. All carpet installed in the building interior shall meet at least one of the testing and product requirements:

1. Carpet and Rug Institute's Green Label Plus Program.
2. Compliant with the VOC-emission limits and testing requirements specified in the California Department of Public Health Standard Method for the Testing and Evaluation of Volatile Organic Chemical Emissions from Indoor Sources Using Environmental Chambers, Version 1.1, February 2010 (also known as CDPH Standard Method V1.1 or Specification 01350).
3. NSF/ANSI 140 at the Gold level or higher;
4. Scientific Certifications Systems Sustainable Choice; or
5. Compliant with the Collaborative for High Performance Schools California (2014 CA-CHPS) Criteria listed in the CHPS High Performance Product Database.

5.504.4.4.1 Carpet cushion. All carpet cushion installed in the building interior shall meet the requirements of the Carpet and Rug Institute Green Label program.

5.504.4.4.2 Carpet adhesive. All carpet adhesive shall meet the requirements of Table 5.504.4.1.

5.504.4.5 Composite wood products. Hardwood plywood, particleboard and medium density fiberboard composite wood products used on the interior or exterior of the buildings shall meet the requirements for formaldehyde as specified in ARB's Air Toxics Control Measure (ATCM) for Composite Wood (17 CCR 93120 et seq.). Those materials not exempted under the ATCM must meet the specified emission limits, as shown in Table 5.504.4.5.

5.504.4.5.3 Documentation. Verification of compliance with this section shall be provided as requested by the enforcing agency. Documentation shall include at least one of the following:

1. Product certifications and specifications.
2. Chain of custody certifications.
3. Product labeled and invoiced as meeting the Composite Wood Products regulation (see CCR, Title 17, Section 93120, et seq.).
4. Exterior grade products marked as meeting the PS-1 or PS-2 standards of the Engineered Wood Association, the Australian AS/NZS 2269 or European 636 3S standards.
5. Other methods acceptable to the enforcing agency.

Y | N/A | RESPON. PARTY

TABLE 5.504.4.5 - FORMALDEHYDE LIMITS[1]
MAXIMUM FORMALDEHYDE EMISSIONS IN PARTS PER MILLION

PRODUCT	CURRENT LIMIT
HARDWOOD PLYWOOD VENEER CORE	0.05
HARDWOOD PLYWOOD COMPOSITE CORE	0.05
PARTICLE BOARD	0.09
MEDIUM DENSITY FIBERBOARD	0.11
THIN MEDIUM DENSITY FIBERBOARD[2]	0.13

1. VALUES IN THIS TABLE ARE DERIVED FROM THOSE SPECIFIED BY THE CALIFORNIA AIR RESOURCES BOARD, AIR TOXICS CONTROL MEASURE FOR COMPOSITE WOOD AS TESTED IN ACCORDANCE WITH ASTM E 1333. FOR ADDITIONAL INFORMATION, SEE CALIFORNIA CODE OF REGULATIONS, TITLE 17, SECTIONS 93120 THROUGH 93120.12.
2. THIN MEDIUM DENSITY FIBERBOARD HAS A MAXIMUM THICKNESS OF 5/16 INCHES (8 MM).

5.504.4.6 Resilient flooring systems. For 80 percent of floor area receiving resilient flooring, installed resilient flooring shall meet at least one of the following:

1. Certified under the Resilient Floor Covering Institute (RFCI) FloorScore program;
2. Compliant with the VOC-emission limits and testing requirements specified in the California Department of Public Health's 2010 Standard Method for the Testing and Evaluation Chambers, Version 1.1, February 2010;
3. Compliant with the Collaborative for High Performance Schools California (2014 CA-CHPS) Criteria and listed in the CHPS High Performance Product Database; or
4. Products certified under UL GREENGUARD Gold (formerly the Greenguard Children's & Schools Program).

5.504.4.6.1 Verification of compliance. Documentation shall be provided verifying that resilient flooring materials meet the pollutant emission limits.

5.504.5.3 Filters. In mechanically ventilated buildings, provide regularly occupied areas of the building with air filtration media for outside and return air that provides at least a Minimum Efficiency Reporting Value (MERV) of 13. MERV 13 filters shall be installed prior to occupancy, and recommendations for maintenance with filters of the same value shall be included in the operation and maintenance manual.

Exceptions: Existing mechanical equipment.

5.504.5.3.1 Labeling. Installed filters shall be clearly labeled by the manufacturer indicating the MERV rating.

☐ | X | **5.504.7 ENVIRONMENTAL TOBACCO SMOKE (ETS) CONTROL.** Where outdoor areas are provided for smoking, prohibit smoking within 25 feet of building entries, outdoor air intakes and operable windows and within the building as already prohibited by other laws or regulations; or as enforced by ordinances, regulations or policies of any city, county, city and county, California Community College, campus of the California State University, or campus of the University of California, whichever are more stringent. When ordinances, regulations or policies are not in place, post signage to inform building occupants of the prohibitions.

SECTION 5.505 INDOOR MOISTURE CONTROL

X | ☐ | G.C. **5.505.1 INDOOR MOISTURE CONTROL.** Buildings shall meet or exceed the provisions of California Building Code, CCR, Title 24, Part 2, Sections 1202 (Ventilation) and Chapter 14 (Exterior Walls). For additional measures, see Section 5.407.2 of this code.

SECTION 5.506 INDOOR AIR QUALITY

X | ☐ | G.C. **5.506.1 OUTSIDE AIR DELIVERY.** For mechanically or naturally ventilated spaces in buildings, meet the minimum requirements of Section 120.1 (Requirements For Ventilation) of the *California Energy Code*, or the applicable local code, whichever is more stringent, and Division 1, Chapter 4 of CCR, Title 8.

☐ | X | **5.506.2 CARBON DIOXIDE (CO_2) MONITORING.** For buildings or additions equipped with demand control ventilation, CO_2 sensors and ventilation controls shall be specified and installed in accordance with the requirements of the California Energy Code, Section 120(c)(4).

SECTION 5.507 ENVIRONMENTAL COMFORT

X | ☐ | ARCH. **5.507.4 ACOUSTICAL CONTROL.** Employ building assemblies and components with Sound Transmission Class (STC) values determined in accordance with ASTM E 90 and ASTM E 413, or Outdoor-Indoor Sound Transmission Class (OITC) determined in accordance with ASTM E 1332, using either the prescriptive or performance method in Section 5.507.4.1 or 5.507.4.2.

Exception: Buildings with few or no occupants or where occupants are not likely to be affected by exterior noise, as determined by the enforcement authority, such as factories, stadiums, storage, enclosed parking structures and utility buildings.

Exception: [DSA-SS] For public schools and community colleges, the requirements of this section and all subsections apply only to new construction.

5.507.4.1 Exterior noise transmission, prescriptive method. Wall and roof-ceiling assemblies exposed to the noise source making up the building or addition envelope or altered envelope shall meet a composite STC rating of at least 50 or a composite OITC rating of no less than 40, with exterior windows of a minimum STC of 40 or OITC of 30 in the following locations:

1. Within the 65 CNEL noise contour of an airport.

Exceptions:

1. L_{dn} or CNEL for military airports shall be determined by the facility Air Installation Compatible Land Use Zone (AICUZ) plan.
2. L_{dn} or CNEL for other airports and heliports for which a land use plan has not been developed shall be determined by the local general plan noise element.

2. Within the 65 CNEL or L_{dn} noise contour of a freeway or expressway, railroad, industrial source or fixed-guideway source as determined by the Noise Element of the General Plan.

5.507.4.1.1. Noise exposure where noise contours are not readily available. Buildings exposed to a noise level of 65 dB L_{eq} - 1-hr during any hour of operation shall have building, addition or alteration exterior wall and roof-ceiling assemblies exposed to the noise source meeting a composite STC rating of at least 45 (or OITC 35), with exterior windows of a minimum STC of 40 (or OITC 30).

5.507.4.2 Performance Method. For buildings located as defined in Section 5.507.4.1 or 5.507.4.1.1, wall and roof-ceiling assemblies exposed to the noise source making up the building or addition envelope or altered envelope shall be constructed to provide an interior noise environment attributable to exterior sources that does not exceed an hourly equivalent noise level (Leq-1Hr) of 50 dBA in occupied areas during any hour of operation.

5.507.4.2.1 Site Features. Exterior features such as sound walls or earth berms may be utilized as appropriate to the building, addition or alteration project to mitigate sound migration to the interior.

5.507.4.2.2 Documentation of Compliance. An acoustical analysis documenting complying interior sound levels shall be prepared by personnel approved by the architect or engineer of record.

5.507.4.3 Interior sound transmission. Wall and floor-ceiling assemblies separating tenant spaces and tenant spaces and public places shall have an STC of at least 40.

Note: Examples of assemblies and their various STC ratings may be found at the California Office of Noise Control: www.toolbase.org/PDF/CaseStudies/stc_icc_ratings.pdf.

SECTION 5.508 OUTDOOR AIR QUALITY

☐ | X | **5.508.1 Ozone depletion and greenhouse gas reductions.** Installations of HVAC, refrigeration and fire suppression equipment shall comply with Sections 5.508.1.1 and 5.508.1.2.

5.508.1.1 Chlorofluorocarbons (CFCs). Install HVAC, refrigeration and fire suppression equipment that do not contain CFCs.

5.508.1.2 Halons. Install HVAC, refrigeration and fire suppression equipment that do not contain Halons.

☐ | X | **5.508.2 Supermarket refrigerant leak reduction.** New commercial refrigeration systems shall comply with the provisions of this section when installed in retail food stores 8,000 square feet or more conditioned area, and that utilize either refrigerated display cases, or walk-in coolers or freezers connected to remote compressor units or condensing units. The leak reduction measures apply to refrigeration systems containing high-global-warming potential (high-GWP) refrigerants with a GWP of 150 or greater. New refrigeration systems include both new facilities and the replacement of existing refrigeration systems in existing facilities.

Exception: Refrigeration systems containing low-global warming potential (low-GWP) refrigerant with a GWP value less than 150 are not subject to this section. Low-GWP refrigerants are nonozone-depleting refrigerants that include ammonia, carbon dioxide (CO_2), and potentially other refrigerants.

Y | N/A | RESPON. PARTY

X

5.508.2.1 Refrigerant piping. Piping compliant with the California Mechanical Code shall be installed to be accessible for leak protection and repairs. Piping runs using threaded pipe, copper tubing with an outside diameter (OD) less than 1/4 inch, flared tubing connections and short radius elbows shall not be used in refrigerant systems except as noted below.

5.508.2.1.1 Threaded pipe. Threaded connections are permitted at the compressor rack.

5.508.2.1.2 Copper pipe. Copper tubing with an OD less than 1/4 inch may be used in systems with a refrigerant charge of 5 pounds or less.

5.508.2.1.2.1 Anchorage. One-fouth-inch OD tubing shall be securely clamped to a rigid base to keep vibration levels below 8 mils.

5.508.2.1.3 Flared tubing connections. Double-flared tubing connections may be used for pressure controls, valve pilot lines and oil.

Exception: Single-flared tubing connections may be used with a multiring seal coated with industrial sealant suitable for use with refrigerants and tightened in accordance with manufacturer's recommendations.

5.508.2.1.4 Elbows. Short radius elbows are only permitted where space limitations prohibit use of long radius elbows.

5.508.2.2 Valves. Valves Valves and fittings shall comply with the *California Mechanical Code* and as follows.

5.508.2.2.1 Pressure relief valves. For vessels containing high-GWP refrigerant, a rupture disc shall be installed between the outlet of the vessel and the inlet of the pressure relief valve.

5.508.2.2.1.1 Pressure detection. A pressure gauge, pressure transducer or other device shall be installed in the space between the rupture disc and the relief valve inlet to indicate a disc rupture or discharge of the relief valve.

5.508.2.2.2 Access valves. Only Schrader access valves with a brass or steel body are permitted for use.

5.508.2.2.2.1 Valve caps. For systems with a refrigerant charge of 5 pounds or more, valve caps shall be brass or steel and not plastic.

5.508.2.2.2.2 Seal caps. If designed for it, the cap shall have a neoprene O-ring in place.

5.508.2.2.2.2.1 Chain tethers. Chain tethers to fit ovr the stem are required for valves designed to have seal caps.

Exception: Valves with seal caps that are not removed from the valve during stem operation.

5.508.2.3 Refrigerated service cases. Refrigerated service cases holding food products containing vinegar and salt shall have evaporator coils of corrosion-resistant material, such as stainless steel; or be coated to prevent corrosion from these substances.

5.508.2.3.1 Coil coating. Consideration shall be given to the heat transfer efficiency of coil coating to maximize energy efficiency.

5.508.2.4 Refrigerant receivers. Refrigerant receivers with capacities greater than 200 pounds shall be fitted with a device tha indicates the level of refrigerant in the receiver.

5.508.2.5 Pressure testing. The system shall be pressure tested during installation prior to evacuation and charging.

5.508.2.5.1 Minimum pressure. The system shall be charged with regulated dry nitrogen and appropriate tracer gas to bring system pressure up to 300 psig minimum.

5.508.2.5.2 Leaks. Check the system for leaks, repair any leaks, and retest for pressure using the same gauge.

5.508.2.5.3 Allowable pressure change. The system shall stand, unaltered, for 24 hours with no more than a +/- one pound pressure change from 300 psig, measured with the same gauge.

5.508.2.6 Evacuation. The system shall be evacuated after pressure testing and prior to charging.

5.508.2.6.1 First vacuum. Pull a system vacuum down to at least 1000 microns (+/- 50 microns), and hold for 30 minutes.

5.508.2.6.2 Second vacuum. Pull a second system vacuum to a minimum of 500 microns and hold for 30 minutes.

5.508.2.6.3 Third vacuum. Pull a third vacuum down to a minimum of 300 microns, and hold for 24 hours with a maximum drift of 100 microns over a 24-hour period.

CHAPTER 7
INSTALLER & SPECIAL INSPECTOR QUALIFICATIONS

702 QUALIFICATIONS

702.1 INSTALLER TRAINING. HVAC system installers shall be trained and certified in the proper installation of HVAC systems including ducts and equipment by a nationally or regionally recognized training or certification program. Uncertified persons may perform HVAC installations when under the direct supervision and responsibility of a person trained and certified to install HVAC systems or contractor licensed to install HVAC systems. Examples of acceptable HVAC training and certification programs include but are not limited to the following:

1. State certified apprenticeship programs.
2. Public utility training programs.
3. Training programs sponsored by trade, labor or statewide energy consulting or verification organizations.
4. Programs sponsored by manufacturing organizations.
5. Other programs acceptable to the enforcing agency.

702.2 SPECIAL INSPECTION [HCD]. When required by the enforcing agency, the owner or the responsible entity acting as the owner's agent shall employ one or more special inspectors to provide inspection or other duties necessary to substantiate compliance with this code. Special inspectors shall demonstrate competence to the satisfaction of the enforcing agency for the particular type of inspection or task to be performed. In addition to other certifications or qualifications acceptable to the enforcing agency, the following certifications or education may be considered by the enforcing agency when evaluating the qualifications of a special inspector:

1. Certification by a national or regional green building program or standard publisher.
2. Certification by a statewide energy consulting or verification organization, such as HERS raters, building performance contractors, and home energy auditors.
3. Successful completion of a third party apprentice training program in the appropriate trade.
4. Other programs acceptable to the enforcing agency.

Notes:

1. Special inspectors shall be independent entities with no financial interest in the materials or the project they are inspecting for compliance with this code.
2. HERS raters are special inspectors certified by the California Energy Commission (CEC) to rate homes in California according to the Home Energy Rating System (HERS).

[BSC-CG] When required by the enforcing agency, the owner or the responsible entity acting as the owner's agent shall employ one or more special inspectors to provide inspection or other duties necessary to substantiate compliance with this code. Special inspectors shall demonstrate competence to the satisfaction of the enforcing agency for the particular type of inspection or task to be performed. In addition, the special inspector shall have a certification from a recognized state, national or international association, as determined by the local agency. The area of certification shall be closely related to the primary job function, as determined by the local agency.

Note: Special inspectors shall be independent entities with no financial interest in the materials or the project they are inspecting for compliance with this code.

703 VERIFICATIONS

703.1 DOCUMENTATION. Documentation used to show compliance with this code shall include but is not limited to, construction documents, plans, specifications, builder or installer certification, inspection reports, or other methods acceptable to the enforcing agency which demonstrate substantial conformance. When specific documentation or special inspection is necessary to verify compliance, that method of compliance will be specified in the appropriate section or identified applicable checklist.

PROJECT MANAGEMENT
ALAMEIDA ARCHITECTURE
CONSTRUCTION MANAGEMENT
555 S. MAIN STREET, SUITE 2
SEBASTOPOL, CA 95472
(707) 824-1219
WWW.ALAMEIDA.COM

COUNTY OF HUMBOLDT — The Home of the Redwoods

PROJECT

TENANT IMPROVEMENTS FOR ECONOMIC DEVELOPMENT AND CHILD SUPPORT SERVICES

2420 6TH STREET
EUREKA, CA

REGISTERED ARCHITECT — DONALD R ALAMEIDA — C-19767 — Exp. 11/30/23 — STATE OF CALIFORNIA

No.	Description	Date
1.	PLAN CHECK COMMENTS	12/12/22

CALGREN CHECKLIST

Project number	2108
Date	5/8/22
Drawn by	Author
Checked by	Checker

CG-3

Scale

5/2/2023 4:55:38 PM

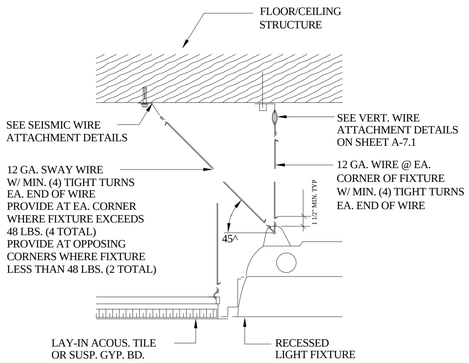

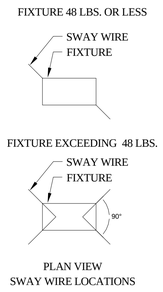

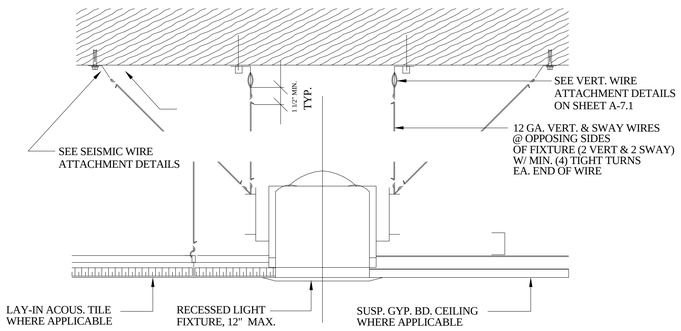

3 / E-0 FIXTURE @ SUSPENDED CEIL'G
N.T.S.

SIGNAL SYSTEM CABLE SCHEDULE

TAG	DESCRIPTION	USE
A	2 #12 THWN	FIRE ALARM - SIGNAL DEVICES
B	WESTPENN D990 (2 - # 16)	FIRE ALARM - LOOP TWISTED UNSHEILDED
C	WESTPENN D995 (2-# 14)	FIRE ALARM SPEAKER - TWISTED SHEILDED PAIR
D	WESTPENN AQC225 (2 - #16)	FIRE ALARM - LOOP TWISTED UNSHEILDED UNDERGROUND
E	FALCON 410214H20 (2 - #14)	FIRE ALARM SPEAKER - TWISTED PAIR UNDERGROUND
G	3#12 THWN	CLOCK BELOW GRADE
H	WESTPENN 238	CLOCK ABOVE GRADE
I	WESTPENN AQC291	SPEAKER BELOW GRADE
J	WESTPENN 291	SPEAKER ABOVE GRADE
K	4 PAIR CAT 6 (SEE SPEC'S)	DATA BELOW GRADE
L	4 PAIR CAT 6 (SEE SPEC'S)	DATA ABOVE GRADE
M	12 STRAND MM FIBER (SEE SPEC'S)	DATA
N	NOT USED	
O	4 PAIR CAT 6 (SEE SPEC'S)	TELEPHONE ABOVE GRADE
P	4 PAIR CAT 6 (SEE SPEC'S)	TELEPHONE BELOW GRADE

ELECTRICAL GENERAL NOTES

1. SEE ARCHITECTURAL DRAWINGS FOR COUNTER HEIGHTS. INSTALL ALL RECEPTACLES, DEVICES, ETC. ACCORDINGLY.
2. SEE ARCHITECTURAL REFLECTED CEILING PLAN FOR EXACT LOCATION OF ALL LIGHTING FIXTURES.
3. FINISH OF ALL LIGHTING FIXTURES SHALL BE AS SELECTED BY THE ARCHITECT FROM STANDARD FINISHES.
4. SEE MECHANICAL DRAWINGS FOR EXACT LOCATION OF EQUIPMENT REQUIRING ELECTRICAL CONNECTION.
5. SEE MECHANICAL CONTROL DIAGRAM FOR CONTROL WIRING BY ELECTRICAL CONTRACTOR.
6. FIRE STOPPING SHALL BE PROVIDED WHERE PENETRATING ITEMS PASS ENTIRELY THROUGH BOTH PROTECTIVE MEMBRANES OF BEARING WALLS REQUIRED TO HAVE A FIRE-RESISTIVE RATING AND WALLS REQUIRING PROTECTED OPENINGS. FIRE STOPPING SHALL ALSO BE PROVIDED AT PENETRATIONS OF FIRE RESISTIVE FLOORS AND FLOORS WHICH ARE PART OF A CEILING-FLOOR ASSEMBLY. FIRE-STOPPING SHALL HAVE AN "F" OR "T" RATING AS DETERMINED BY TESTS CONDUCTED IN ACCORDANCE WITH UBC SECTION 714 SEE SPECIFICATIONS.
7. PROVIDE EMERGENCY BATTERY PACK FOR ALL FIXTURES. WHERE SHOWN ON PLAN / SCHEDUL CONNECT BATTERY PACKS AHEAD OF SWITCH.

NOTE:

INSTALLATION OF ALL ELECTRICAL SWITCHES MUST COMPLY WITH CBC SECTION 11B-308.1.1 AND ELECTRICAL RECEPTACLES MUST COMPLY WITH CBC SECTION 11B-308.1.2

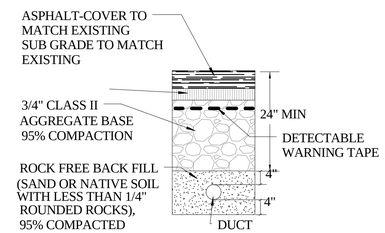

1 / E-0 ELEC TRENCH DETAIL
6" = 1'-0"

PANEL NO: "U"

VOLT 120 / 208 V
PHASE 3
WIRE 4 W
BUSSING 100 AMP
POLES 42 P

REMARKS:
EXISTING PANEL U
PRIOR TO MODIFICATIONS

FEEDER SEE SINGLE LINE
CONDUIT SEE SINGLE LINE
MOUNTED SURFACE
AIC RATING 10,000

LOAD DESCRIPTION	TYPE	A	B	C	BRKR	CKT.	CKT.	BRKR	A	B	C	TYPE	LOAD DESCRIPTION
RECPT RM. 130	R	0.2			20/1	1	2	20/1	0.4			R	RECEPT / LTG RM. 130
RECPT RM. 130 / ROOF	R		0.5		20/1	3	4	20/1		0.5		R	RECEPT / LTG RM. 130
RECPT RM. 130	R			0.7	20/1	5	6	20/1			0.0	R	RECEPT / LTG RM. 130
RECPT RM. 112	R	0.7			20/1	7	8	20/1	0.5			R	RECEPT / LTG RM. 112
RECPT RM. 112	R		0.7		20/1	9	10	20/1		0.5		R	RECEPT / LTG RM. 112
RECPT RM. 112	R			0.9	20/1	11	12	20/1			0.7	R	RECEPT / LTG RM. 112
RECPT RM. 112 / ROOF	R	0.7			20/1	13	14	20/1	0.4			R	RECEPT / LTG RM. 112
RECPT RM. 101/110	R		0.5		20/1	15	16	20/1		0.5		R	RECEPT / LTG RM. 111
RECPT RM. 111/111	R			0.7	20/1	17	18	20/1			0.5	R	RECEPT / LTG RM. 110/112
RECPT RM. 108/111	R	0.7			20/1	19	20	20/1	0.0			R	RECPT RM. 120
RECEPT. 105/106/107/120	R		1.1		20/1	21	22	20/1		0.2		R	RECEPT / LTG RM. 108/111
RECPT RM. 120 / ROOF	R			0.0	20/1	23	24	20/1			0.5	R	RECEPT / LTG RM. 120
RECPT RM. 101/120	R	0.0			20/1	25	26	20/1	0.9			R	RECEPT / LTG RM. 120
RECPT RM. 101/120	R		0.9		20/1	27	28	20/1		0.000		R	RECEPT / LTG RM. 120
RECPT RM. 101/120	R			0.7	20/1	29	30	20/1			0.0	R	RECEPT / LTG RM. 120
RECPT RM. 120	R	0.0			20/1	31	32	20/1	0.4			R	RECEPT / LTG RM. 130
RECPT RM. 120	R		0.00		20/1	33	34	20/1		0.0		R	RECEPT / LTG RM. 120
RECPT RM. 130	R			0.7	20/1	35	36	20/1			0	R	RECEPT / LTG RM. 120
RECPT RM. 130	R	0.7			20/1	37	38	20/1				R	RECEPT / LTG RM. 130
RECEPT / LTG RM. 112	L				20/1	39	40	20/1					MASTER WORKSTATIONS
WATER HEATER	H				20/1	41	42	-					SPACE
		3.06	3.78	3.78					2.52	1.8	1.8		

DEMAND LOAD SUMMARY			CONN. KVA.	DEMAND FACTOR	DEMAND KVA.
TYPE	M	NON-CONTINUIOUS / MISC.	0	1	0.00
TYPE	L	LIGHTING / CONTINUIOUS	0	1.25	0.00
TYPE	R	RECEPTICLES (FIRST 10 KVA)	10	1	10.00
TYPE	R	RECEPTICLES (OVER 10 KVA)	6.74	0.5	3.37
TYPE	H	HVAC / MECH LOADS	0	1	0.00
TYPE	V	EV / CONTINUOUS	0	1.25	0.00
		TOTALS	16.74		13.37

PHASE A	5.58	KVA
PHASE B	5.58	KVA
PHASE C	5.58	KVA
TOTAL CONNECTED LOAD	16.74	KVA
	46.5	MAX AMPS/PHASE

PANEL NO: "U"

VOLT 120 / 208 V
PHASE 3
WIRE 4 W
BUSSING 100 AMP
POLES 42 P

REMARKS:
RELOCATED AND REVISED PANEL U

FEEDER SEE SINGLE LINE
CONDUIT SEE SINGLE LINE
MOUNTED SURFACE
AIC RATING 10,000

LOAD DESCRIPTION	TYPE	A	B	C	BRKR	CKT.	CKT.	BRKR	A	B	C	TYPE	LOAD DESCRIPTION
UNUSED	R	0.0			20/1	1	2	20/1	0.0			R	UNUSED
UNUSED	R		0.0		20/1	3	4	20/1		0.5		R	RECEPT / LTG RM. 130
RECPT RM. 130	R			0.9	20/1	5	6	20/1			0.0	R	RECEPT / LTG RM. 130
RECPT RM. 112	R	0.2			20/1	7	8	20/1	0.2			R	RECEPT / LTG RM. 112
RECPT RM. 112	R		0.7		20/1	9	10	20/1		0.7		R	RECEPT / LTG RM. 112
RECPT RM. 112	R			0.5	20/1	11	12	20/1			0.7	R	RECEPT / LTG RM. 112
RECPT RM. 112 / ROOF	R	0.5			20/1	13	14	20/1	0.4			R	RECEPT / LTG RM. 112
RECPT RM. 101/110	R		0.2		20/1	15	16	20/1		0.0		R	RECEPT / LTG RM. 111
RECPT RM. 111/111	R			0.2	20/1	17	18	20/1			0.5	R	RECEPT / LTG RM. 110/112
RECPT RM. 108/111	R	0.2			20/1	19	20	20/1	0.0			R	RECPT RM. 120
RECEPT. 105/106/107/120	R		1.6		20/1	21	22	20/1		0.0		R	RECEPT / LTG RM. 108/111
RECPT RM. 120 / ROOF	R			0.0	20/1	23	24	20/1			0.5	R	RECEPT / LTG RM. 120
RECPT RM. 101/120	R	0.7			20/1	25	26	20/1	1.3			R	RECEPT / LTG RM. 120
RECPT RM. 101/120	R		1.4		20/1	27	28	20/1		0.000		R	RECEPT / LTG RM. 120
RECPT RM. 101/120	R			0.9	20/1	29	30	20/1			0.0	R	RECEPT / LTG RM. 120
RECPT RM. 120	R	0.0			20/1	31	32	20/1	1.1			R	RECEPT / LTG RM. 130
RECPT RM. 120	R		0.00		20/1	33	34	20/1		0.0		R	RECEPT / LTG RM. 120
RECPT RM. 130	R			1.1	20/1	35	36	20/1			0	R	RECEPT / LTG RM. 120
RECPT RM. 130	R	0.7			20/1	37	38	20/1				R	RECEPT / LTG RM. 130
RECEPT / LTG RM. 112	L				20/1	39	40	20/1					MASTER WORKSTATIONS
WATER HEATER	H				20/1	41	42	-					SPACE
		2.34	3.96	3.6					2.88	1.26	1.8		

DEMAND LOAD SUMMARY			CONN. KVA.	DEMAND FACTOR	DEMAND KVA.
TYPE	M	NON-CONTINUIOUS / MISC.	0	1	0.00
TYPE	L	LIGHTING / CONTINUIOUS	0	1.25	0.00
TYPE	R	RECEPTICLES (FIRST 10 KVA)	10	1	10.00
TYPE	R	RECEPTICLES (OVER 10 KVA)	5.84	0.5	2.92
TYPE	H	HVAC / MECH LOADS	0	1	0.00
TYPE	V	EV / CONTINUOUS	0	1.25	0.00
		TOTALS	15.84		12.92

PHASE A	5.22	KVA
PHASE B	5.22	KVA
PHASE C	5.4	KVA
TOTAL CONNECTED LOAD	15.84	KVA
	45	MAX AMPS/PHASE

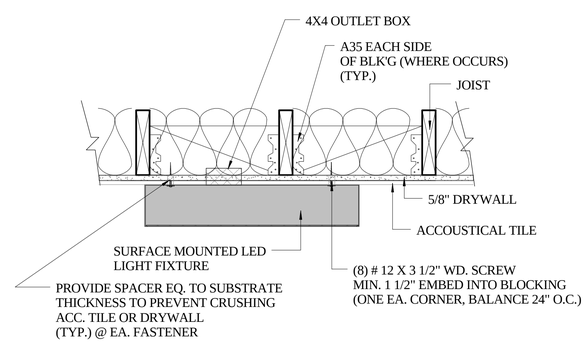

2 / E-0 SURFACE MOUNTED LIGHT
FIXTURE
1 1/2" = 1'-0"

POWER AND LIGHTING DISTRIBUTION NOTE: AT THE TIME PLANS PREPARED INFORMATION KNOWN OF EXISTING POWER AND LIGHTING DISTRIBUTION WAS LIMITED AND MAY BE OUTDATE BY SUBSEQUENT MODIFICATIONS SINCE 1999. ELECTRICAL CONTRACTOR TO VERIFY LOADS ON ALL ELECTRICAL PANELS NECESSARY TO MODIFY FOR POWER AND LIGHTING MODIFICATION REQUIRED TO COMPLETE THIS CSCOPE OF WORK.
CONTRACTOR TO SUBMIT AS BUILT PANEL SCHEDULES AND PROPOSED MODIFICATION TO PANELS. PANEL U ILLUSTRATED ATTEMPTS TO DEMONSTRATE CHANGES TO RECEPTACLE LOADS RATED ABOVE IS NOT THE ONL

PROJECT MANAGEMENT
ALAMEIDA
ARCHITECTURE
CONSTRUCTION MANAGEMENT
555 S. MAIN STREET, SUITE 2
SEBASTOPOL, CA 95472
(707) 824-1219
WWW.ALAMEIDA.COM

COUNTY OF HUMBOLDT
The Home of the Redwoods

PROJECT

TENANT IMPROVEMENTS FOR ECONOMIC DEVELOPMENT AND CHILD SUPPORT SERVICES

2420 6TH STREET
EUREKA, CA

REGISTERED ARCHITECT
DONALD R ALAMEIDA
C-19767
Exp. 11/30/23
STATE OF CALIFORNIA

No.	Description	Date
1.	PLAN CHECK COMMENTS	12/12/22

ELECTRICAL SCHEDULES AND NOTES

Project number	2108
Date	5/8/22
Drawn by	Author
Checked by	Checker

E-0

Scale As indicated

5/2/2023 4:55:41 PM

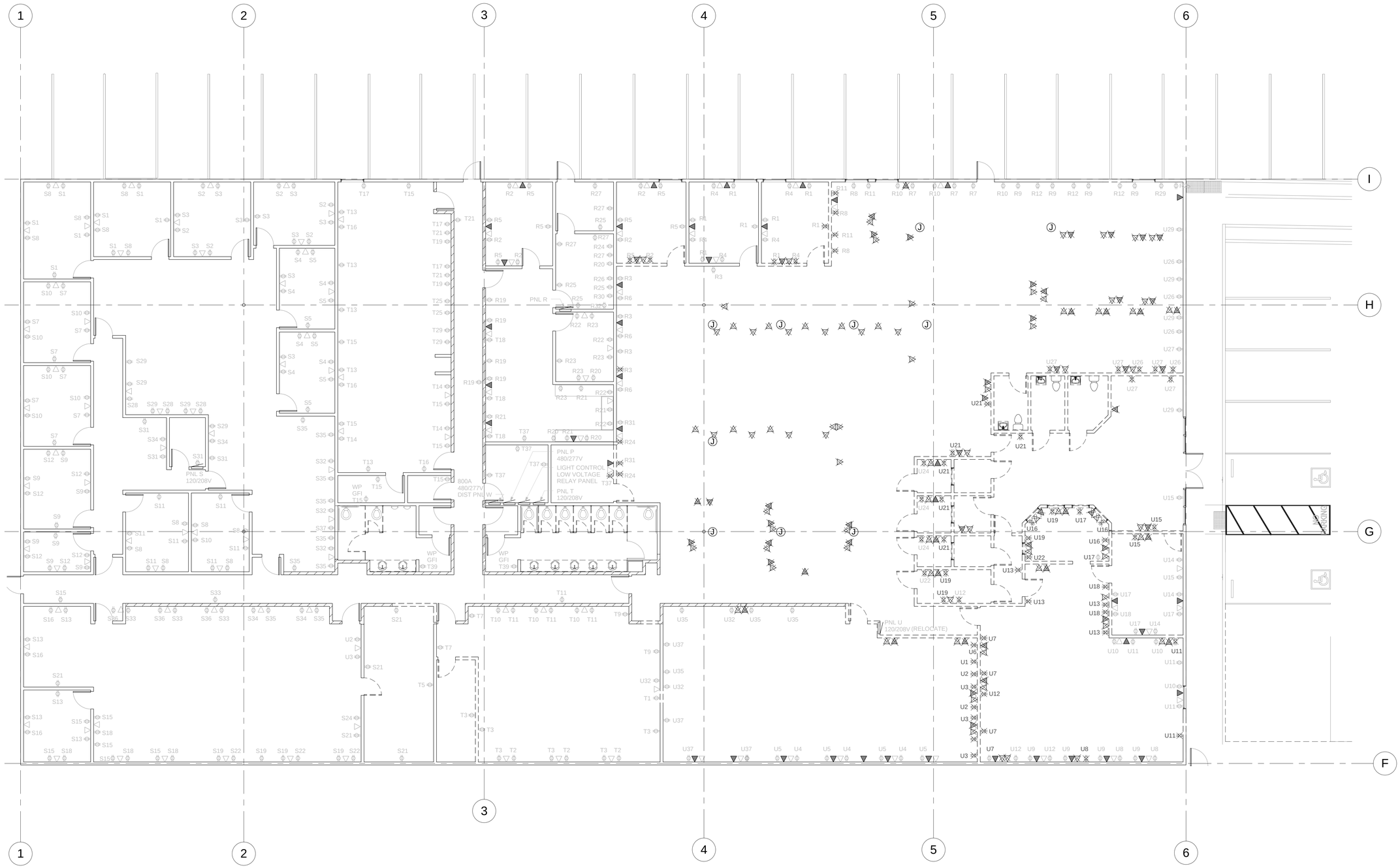

1 / E-1 POWER PLAN - DEMOLITION
1/8" = 1'-0"

ITEMS TO DEMOLISH

- DEMOLISH OUTLET
- DEMOLISH DATA
- DEMOLISH PHONE

ITEMS TO RELOCATE

- PNL U 120/208V (RELOCATE)

ITEMS TO REMAIN

- ELEC FOUR-PLEX OUTLET
- ELEC GROUND FAULT OUTLET
- PNL # / A1 / BRK # — ELEC DUPLEX OUTLET
- ELEC DUPLEX ISOLATED GROUND
- DATA OUTLET
- PHONE OUTLET
- RELAY FOR EXHAUST FAN
- JUNCTION BOX
- TRANSFORMER
- ELEC. SUB PANEL

PROJECT MANAGEMENT

ALAMEIDA ARCHITECTURE

CONSTRUCTION MANAGEMENT

555 S. MAIN STREET, SUITE 2
SEBASTOPOL, CA 95472
(707) 824-1219
WWW.ALAMEIDA.COM

COUNTY OF HUMBOLDT
The Home of the Redwoods

PROJECT

TENANT IMPROVEMENTS FOR ECONOMIC DEVELOPMENT AND CHILD SUPPORT SERVICES

2420 6TH STREET
EUREKA, CA

REGISTERED ARCHITECT
DONALD R. ALAMEIDA
C-19767
Exp. 11/30/23
STATE OF CALIFORNIA

No.	Description	Date
1.	PLAN CHECK COMMENTS	12/12/22

ELECTRICAL POWER DEMOLITION

Project number	2108
Date	5/8/22
Drawn by	Author
Checked by	Checker

E-1

Scale	1/8" = 1'-0"

5/2/2023 4:55:46 PM

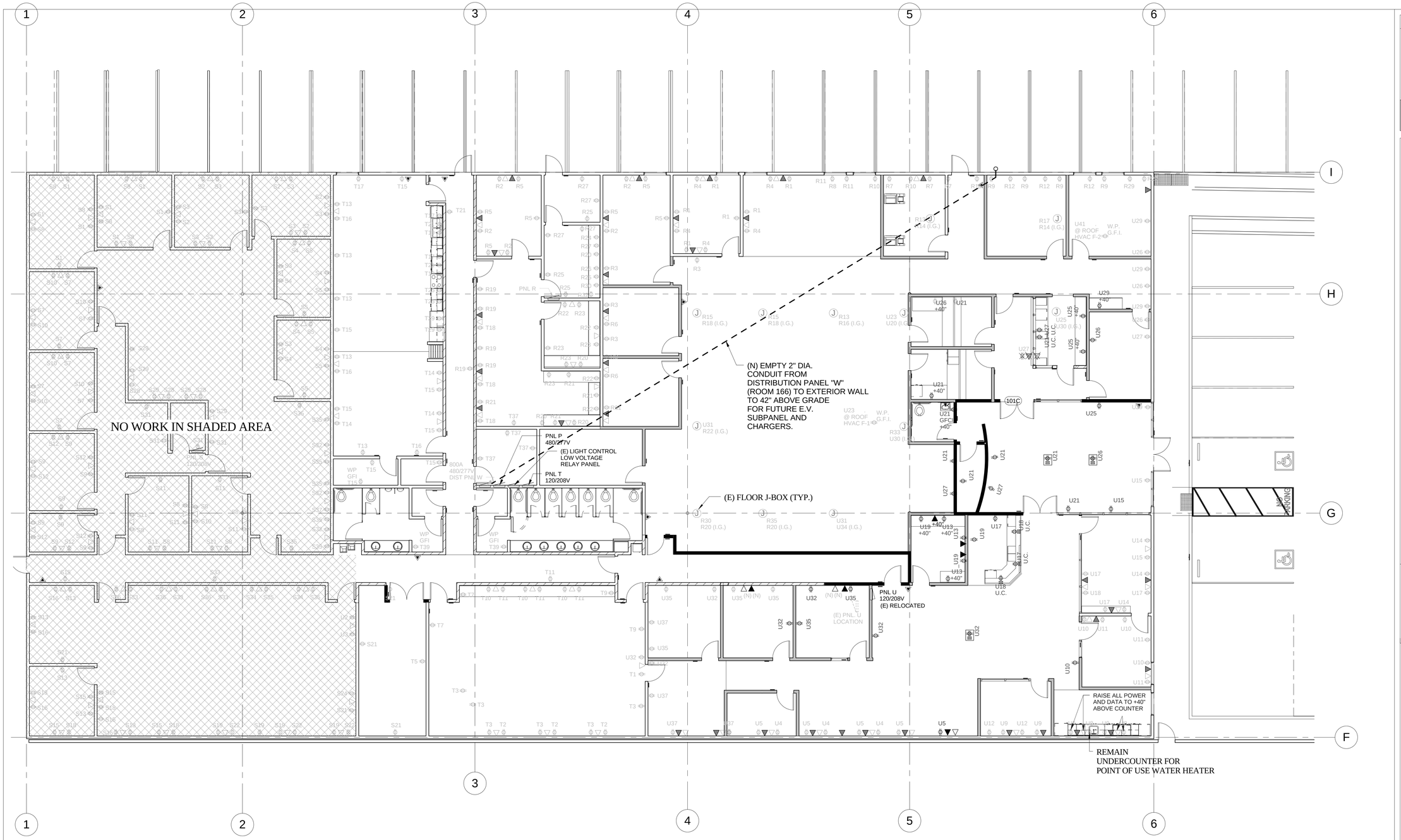

ITEMS TO RELOCATED

PNL U
120/208V (RELOCATE)

EXISTING ITEMS UNLESS AS INDICATED (N) FOR NEW

- ELEC FOUR-PLEX OUTLET
- ELEC GROUND FAULT OUTLET
- EXISTING ELEC DUPLEX OUTLET
- PNL # / A1 / BRK # — ELEC DUPLEX OUTLET
- ELEC DUPLEX ISOLATED GROUND
- A1 U.C. — ELEC DUPLEX UNDER COUNTER
- UNDER COUNTER — DATA OUTLET
- EXISTING DATA OUTLET
- EXISTING PHONE OUTLET
- ELEC FOURPLEX W/ USB FLUSH WITH FLOOR W/ POPUP COVER
- R — RELAY FOR EXHAUST FAN
- J — JUNCTION BOX
- (I.G.) ISOLATED GROUND
- T — TRANSFORMER
- ELEC. SUB PANEL

MODIFICATIONS TO EXISTING DEVICES

1. ALL EXISTING ELECTRICAL RECEPTACLES TO BE RAISED WITH BOTTOM OF BOX AT 15" A.F.F. AND SWITCHES 48" MAX. TO TOP OF BOX.
2. RAISE ALL EXISTING FIRE ALARM STROBES TO 80" A.F.F. CONTRACTOR TO VERITY LOCATIONS AND COUNT IN FIELD

NOTE:

INSTALLATION OF ELECTRICAL SWITCHES MUST COMPLY WITH CBC SECTION 11B-308.1.1 AND ELECTRICAL RECEPTACLES MUST COMPLY WITH CBC SECTION 11B-308.1.2

1 / E-2 POWER PLAN
1/8" = 1'-0"

PROJECT MANAGEMENT

ALAMEIDA ARCHITECTURE

CONSTRUCTION MANAGEMENT

555 S. MAIN STREET, SUITE 2
SEBASTOPOL, CA 95472
(707) 824-1219
WWW.ALAMEIDA.COM

COUNTY OF HUMBOLDT — The Home of the Redwoods

PROJECT

TENANT IMPROVEMENTS FOR ECONOMIC DEVELOPMENT AND CHILD SUPPORT SERVICES

2420 6TH STREET
EUREKA, CA

REGISTERED ARCHITECT DONALD R. ALMEIDA C-19767 Exp. 11/30/23 STATE OF CALIFORNIA

No.	Description	Date
1.	PLAN CHECK COMMENTS	12/12/22

POWER PLAN

Project number	2108
Date	5/8/22
Drawn by	Author
Checked by	Checker

E-2

Scale 1/8" = 1'-0"

5/2/2023 4:55:51 PM

TRACK LIGHTING SCHEDULE PRODUCT : WAC STRUT TRACK LIGHTING SYSTEM			
DESCRIPTION	MODEL #	WATTS	COUNT
4 FT. SUSPENDED TRACK CHANEL	S2-CPS04-BK	NA	11
8 FT. SUSPENDED TRACK CHANEL	S2-CPS08-BK	NA	14
TRIG ADUSTABLE HUBS	S2CPS-TRIG-BLK	NA	9
VACANCY / DAYLIGHT SENSOR	S25N-1-BK	NA	1
12" MULTI-STEALTH DOWNLIGHTS	MD12-2-F935BK	15.5	2
24" MULTI-STEALTH DOWNLIGHTS	MD24-2-F935BK	15.5	4
SILO DYNAMIC FOCUS DOWNLIGHT	S2SS-1-935BK W/ 11P-CRL-BK	6.5	40
SILO PENDANT	S2PD01-2-935BKBK	20	4

LIGHT FIXTURE SCHEDULE

MARK	DESCRIPTION	MANUFACTURER	MODEL #	MOUNT	LAMP	WATTS	VOLTS	COMMENTS
A	RETROFIT (E) PARBOLIC WITH L.E.D.	LITHONIA	2ESL4R-40L-MVOLT-LP840	LAY-IN CEILING	L.E.D.	30		
B	RETROFIT / RELOCATE EXISTING (E) PARABOLIC W/ L.E.D.	LITHONIA	2ESL4R-40L-MVOLT-LP840	LAY-IN CEILING	L.E.D.	30		
D	1X4 PENDANT FIXTUDRE	LITHONIA	STL4-48L-EZ1-LP840-E10WLCP W/ F2 MOUNTING KIT	PENDANT	L.E.D.	34.9	277	
E	EXISTING TO REMAIN		EXISTING TO REMAIN	EXISTING	EXISTING	59	277	
F	RECESSED CAN FIXTURE	LITHONIA	LDN6 35/15MVOLT GZ10 HSG	RECESSED	L.E.D.	18	277	
G	RECESSED CAN FIXTURE - OUTDOOR RATED	LITHONIA		RECESSED	L.E.D.	18	277	
H	2X2 LAY-IN LED	LITHONIA	LINTHONIA 2VTL2-40L-ADP-E-MVOLT-EZ1	LAY-IN CEILING	L.E.D.	33.1	277	
K	TRACK LIGHTING	WAC	STRUT S2 CP508-4K & CP504-BK W/ S2SC96-BK & S2CP-CP	TRACK SUSPENDED	L.E.D.		277	
L	PENDANT RING L.E.D.	EUREKA	4800-54 LED 30 120V FV RDPAC 60 RC WHM WHM	PENDANT	L.E.D.	48.3	277	

GENERAL NOTE: FIXTURES DENOTED WITH "NL EM" TO HAVE NIGHT LIGHT AND EMERGENCY SEE PLAN

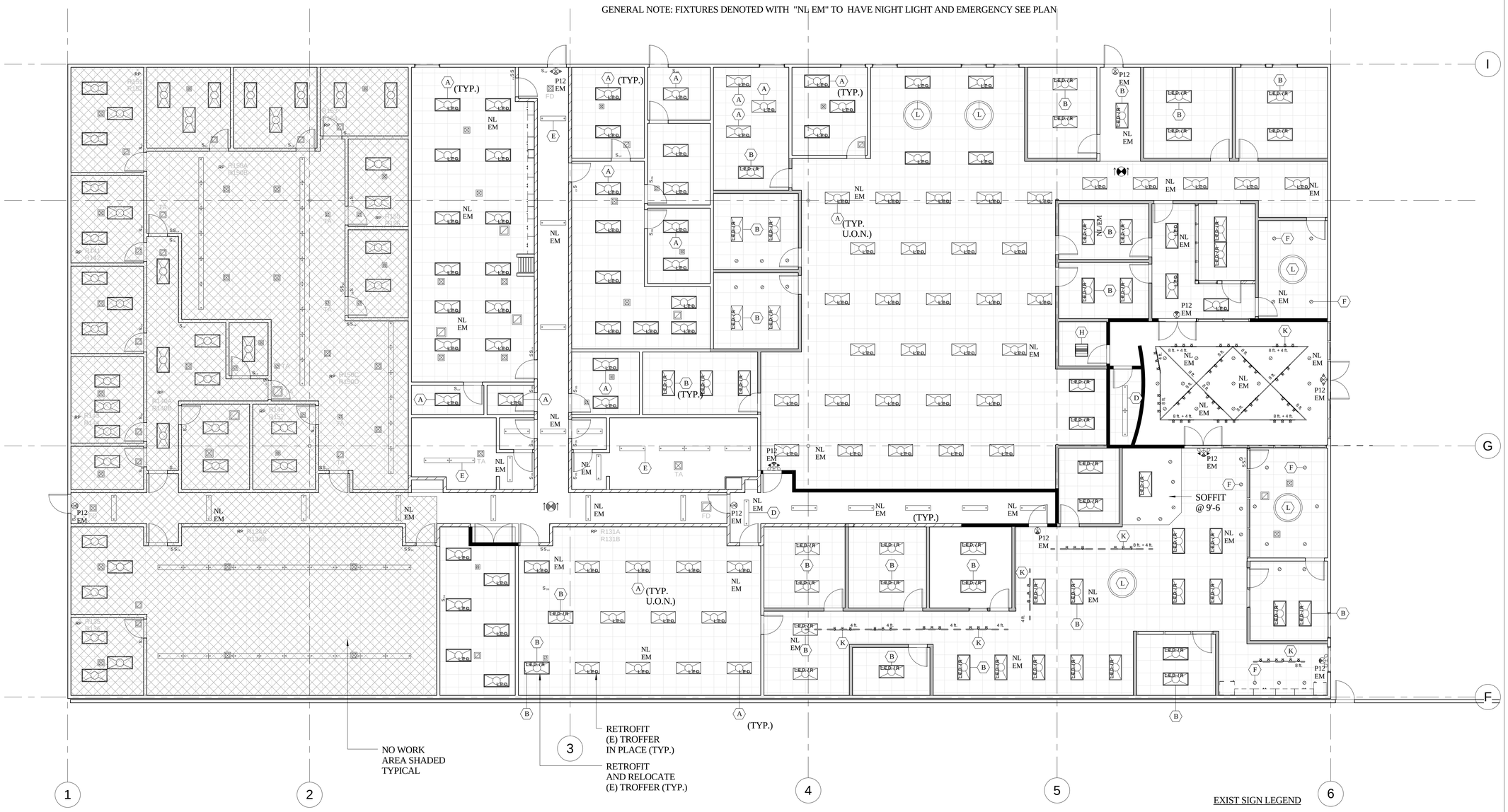

1 / E-3 REFLECTED CEILING LIGHTING PLAN
1/8" = 1'-0"

T-24 / CALGREEN OUTDOOR LIGHTING NOTES:

OUTDOOR LIGHTING ZONE : LZ-3
PRESCRIPTIVE LIGHTING ALLOWANCE
INITIAL WATTS ALLOWANCE: 350 WATTS
ASPHALT AREAS: 0.025 W/S.F. X 6,400 S.F. = 160 WATTS
CONCRETE AREAS: 0.03 W/S.F. X 2,129 S.F = 63.8 WATTS
ENTRANCES & EXITS (WITHIN 20 FT.): 19 WATTS
TOTAL OUTDOOR LIGHTING ALLOWANCE = 592
PARKING LOT LIGHTS ARE SOLAR NOT INCLUDED IN TOTAL

EXIST SIGN LEGEND

EXIT SIGN (EXISTING) — EXIT SIGN CEILING (EXISTING)
EXIT SIGN (NEW) — EXIT SIGN CEILING (NEW)
EXIT SIGN WITH EMERGENCY REMOTE HEADS (NEW)

NEW EXIT SIGNS :
WALL MOUNT = LITHONIA LHQM LED EXIT SIGN - GREEN LED
WALL MOUNT W/ EMEGENCY LIGHTS = LHQM W/ QUANTUM LED EMERGENCY REMOTE LAMP HEADS
CEILING MOUNT = LITHONIA CONTRACTOR'S SELECT EXRG LED

PROJECT MANAGEMENT
ALAMEIDA ARCHITECTURE
CONSTRUCTION MANAGEMENT
555 S. MAIN STREET, SUITE 2
SEBASTOPOL, CA 95472
(707) 824-1219
WWW.ALAMEIDA.COM

COUNTY OF HUMBOLDT — The Home of the Redwoods

PROJECT

TENANT IMPROVEMENTS FOR ECONOMIC DEVELOPMENT AND CHILD SUPPORT SERVICES

2420 6TH STREET
EUREKA, CA

REGISTERED ARCHITECT — DONALD R. ALAMEIDA — C-19767 — Exp. 11/30/23 — STATE OF CALIFORNIA

No.	Description	Date
1.	PLAN CHECK COMMENTS	12/12/22

LIGHTING PLAN

Project number	2108
Date	5/8/22
Drawn by	Author
Checked by	Checker

E-3

Scale 1/8" = 1'-0"

5/2/2023 4:55:58 PM

Legend

Description	Quantity	Unit
DW-311	5	Count
LMCP24	1	Count
LMDC-100	27	Count
LMDM-101	38	Count
LMDW-102	3	Count
LMIN-104	5	Count
LMLS-500	3	Count
LMRC-211	15	Count
LMRC-212	11	Count
LMRC-213	4	Count
LMSW-105	4	Count
PW-100	6	Count

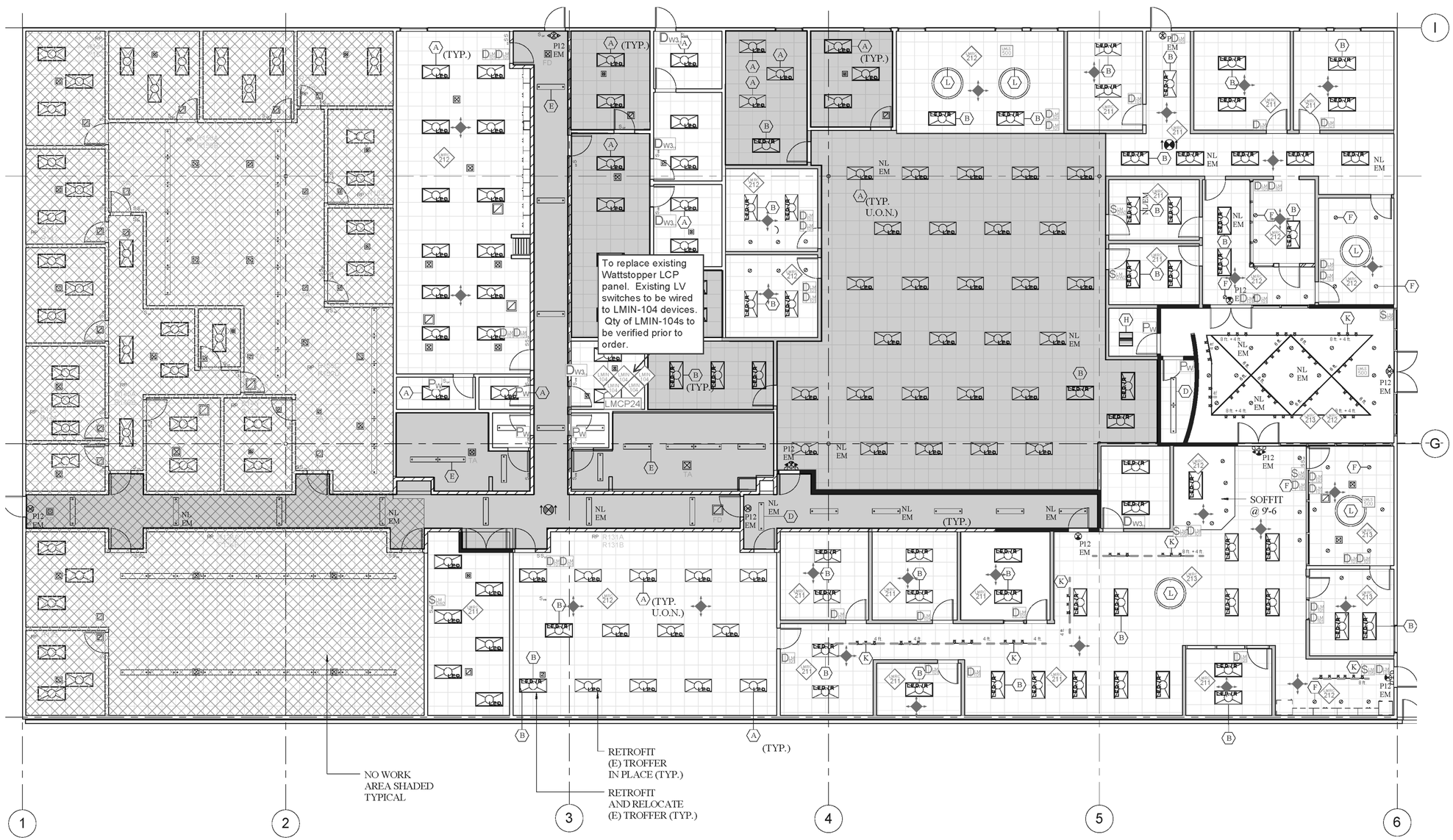

2 E-4 LIGHTING CONTROL PLAN
1/8" = 1'-0"

PROJECT MANAGEMENT

ALAMEIDA ARCHITECTURE

CONSTRUCTION MANAGEMENT

555 S. MAIN STREET, SUITE 2
SEBASTOPOL, CA 95472
(707) 824-1219
WWW.ALAMEIDA.COM

COUNTY OF HUMBOLDT
The Home of the Redwoods

PROJECT

TENANT IMPROVEMENTS FOR ECONOMIC DEVELOPMENT AND CHILD SUPPORT SERVICES

2420 6TH STREET
EUREKA, CA

REGISTERED ARCHITECT
DONALD R. ALAMEIDA
C-19767
Exp. 11/30/23
STATE OF CALIFORNIA

No.	Description	Date
1.	PLAN CHECK COMMENTS	12/12/22

DAYLIGHTING CONTROLLED LIGHTING

Project number	2108
Date	5/8/22
Drawn by	DRA
Checked by	DRA

E-4

Scale 1/8" = 1'-0"

5/2/2023 4:56:03 PM

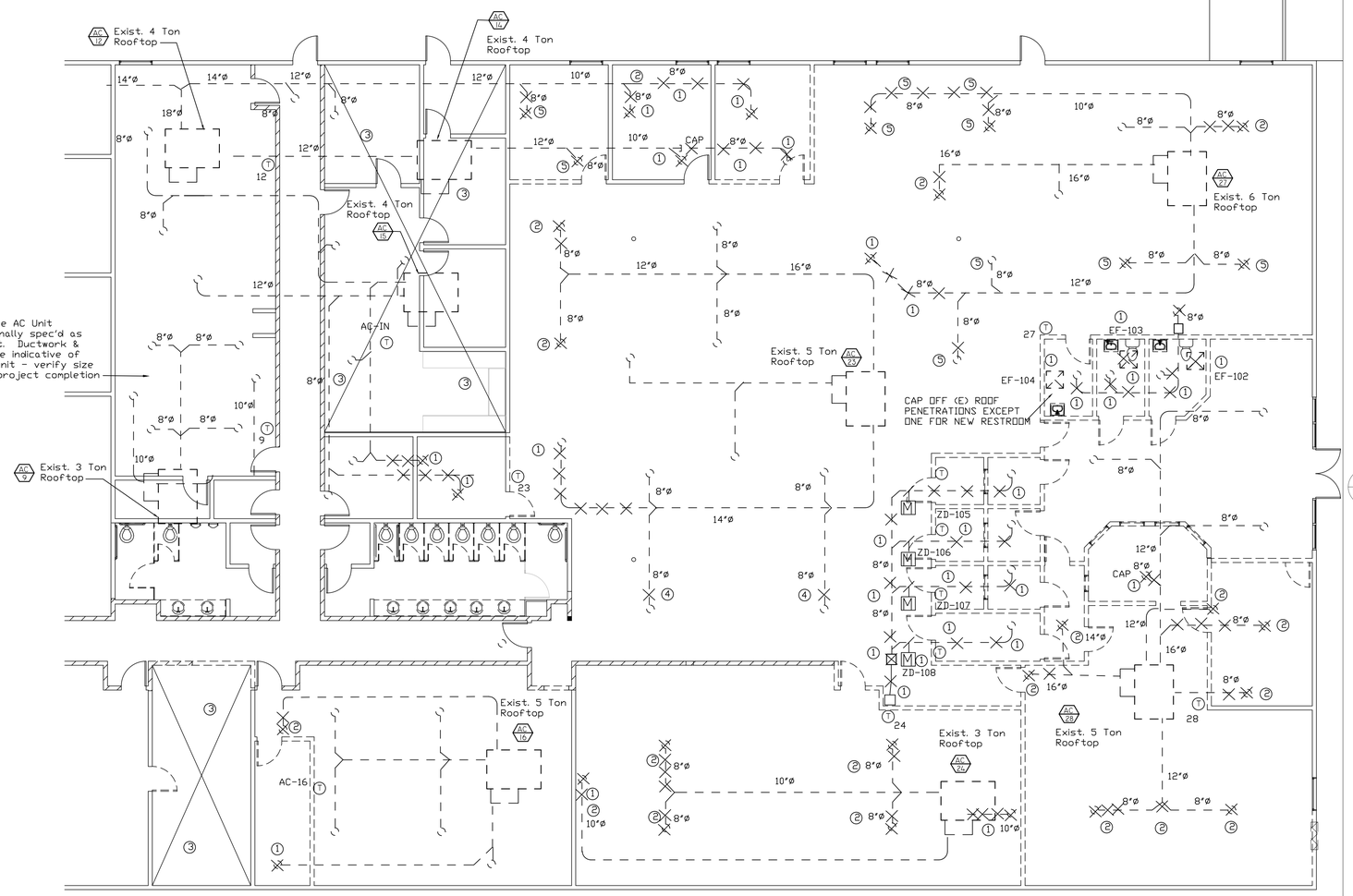

NOTE:
EXISTING DUCT RUNS AND AIR OUTLET LOCATIONS BASED ON 1999 O&M MECHANICAL PLAN

NUMBERED SHEET NOTES:

1. REMOVE EXISTING DUCT, AIR OUTLETS. MOTORIZED DAMPERS, THERMOSTATS & TRANSFER OR EXHAUST FAN
2. REMOVE EXISTING DUCT & PREPARE FOR DUCT INTO NEW LOCATION
3. NO WORK IN THIS AREA
4. REMOVE EXISTING DUCT & RELOCATE AIR OUTLETS FROM NEW CORRIDOR TO APPROX. 6-8 FT WEST - SEE Reflected Ceiling Plan
5. REMOVE EXISTING DUCT & PREPARE FOR NEW DUCT

1 / M-1.1 FIRST FLOOR HVAC DEMOLITION
1/8" = 1'-0"

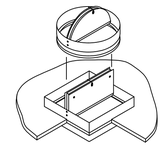

INSTALLATION 1
DUCTLESS RETURN AND FLEX DUCT SUPPLY

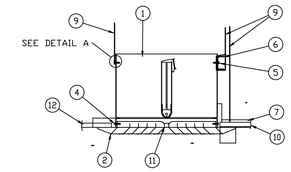

DUCTLESS AND FLEX DUCT SUPPLY

ITEM	DESCRIPTION
1.	DAMPER
2.	GRILLE FRAME (20 GA MIN.)
3.	DUCT (WHERE SHOWN)
4.	#8 SHEET METAL SCREW
5.	#10 SHEET METAL SCREW
6.	16 MSG X 1 1/2" CHANNEL
7.	CEILING GRID (UL CLASSIFIED)
8.	DUCT DROP (WHERE SHOWN)
9.	12 SWG STEEL WIRE
10.	ACOUSTICAL LAY-IN PANELS (UL CLASSIFIED)
11.	DIFFUSER OR GRILLE CORE (METALLIC OR NON-METALLIC
12.	RIGID GYPSUM WALL BOARD CEILING (UL CLASSIFIED)

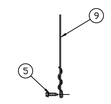

DETAIL A
HANGING WIRE & LOOP

INSTALLATION 4
VOLUME ADJUSTMENT CONTROL

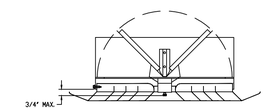

2 / M-1.1 CEILING FIRE DAMPER DETAIL
Not to Scale

EQUIPMENT LIST:

CEILING EXHAUST FAN: CEF
Broan L100
Airflow: 90 CFM @ 0.25" S.P.
Electrical: 120V, 1 ph, 1.1 FLA,
Wt: 25 Lbs.

FRESH AIR INTAKE
Micrometl 0701-0101-70900 Intake Hood
with Motorized Damper with adjustable stops
24vac 10 lbs.

ECONOMIZER MIXING BOX
Micrometl Generic with Motorized Damper & Jade Controller with
Dry bulb controllers and CO2 sensor
24vac 35 lbs.

THERMOSTAT
Honeywell TH8320R1003
7 Day Programmable, for light Commercial applications

CEILING RADIATION DAMPERS
Ruskin CFDR2W Extended neck for Flexible Duct connection

AIR OUTLETS

CD — Ceiling Supply Diffuser
TITUS TMS: Steel Louver Faced Diffuser,
Round Neck, T-Bar Lay-In Ceiling, White Finish

CD-1 — Ceiling Supply Diffuser
TITUS MCD: Steel Modular Core, Border 6
Surface Mounted, White Finish

CR — Ceiling Return
TITUS PAR: Perforated Steel Return,
T-Bar Lay-In Ceiling, White Finish

CR-1 — Ceiling Return
TITUS 350: Bar Steel Return,
Surface Mounted, White Finish

LEO COPPER, Jr.
MECHANICAL ENGINEER

95497 N. Bank Rogue River Rd.
Gold Beach, Oregon 97444
(541) 930-1014
OR LIC: 91779PE
CA LIC: M025931

PROJECT MANAGEMENT
ALAMEIDA ARCHITECTURE
CONSTRUCTION MANAGEMENT
555 S. MAIN STREET, SUITE 2
SEBASTOPOL, CA 95472
(707) 824-1219
WWW.ALAMEIDA.COM

PROJECT

TENANT IMPROVEMENTS FOR ECONOMIC DEVELOPMENT AND CHILD SUPPORT SERVICES

2420 6TH STREET
EUREKA, CA

REGISTERED ARCHITECT DONALD R. ALAMEIDA C-19767 Exp. 11/30/23 STATE OF CALIFORNIA

REGISTERED PROFESSIONAL ENGINEER LEO COPPER, JR. M025931 2022 MECHANICAL STATE OF CALIFORNIA

No.	Description	Date

HVAC DEMOLITION PLAN
DETAILS & NOTES

Project number	2204
Date	12/13/22
Drawn by	LC
Checked by	lc

M-1.1

Scale As indicated

2/8/2022 7:07:19 AM

1 M-2.1 HVAC REFLECTED CEILING PLAN
1/8" = 1'-0"

LEO COPPER, Jr.
MECHANICAL ENGINEER

95497 N. Bank Rogue River Rd.
Gold Beach, Oregon 97444
(541) 930-1014
OR LIC: 91779PE
CA LIC: M025931

PROJECT MANAGEMENT

ALAMEIDA ARCHITECTURE

CONSTRUCTION MANAGEMENT

555 S. MAIN STREET, SUITE 2
SEBASTOPOL, CA 95472
(707) 824-1219
WWW.ALAMEIDA.COM

PROJECT

TENANT IMPROVEMENTS FOR ECONOMIC DEVELOPMENT AND CHILD SUPPORT SERVICES

2420 6TH STREET
EUREKA, CA

REGISTERED ARCHITECT DONALD R. ALAMEIDA C-19767 Exp. 11/30/23 STATE OF CALIFORNIA

REGISTERED PROFESSIONAL ENGINEER LEO COPPER, JR. M025931 Exp. 2023 MECHANICAL STATE OF CALIFORNIA

No.	Description	Date

HVAC RCP PLAN

Project number	2204
Date	12/13/22
Drawn by	LC
Checked by	lc

M-2.1

Scale 1/8" = 1'-0"

2/5/2022 8:51:22 AM

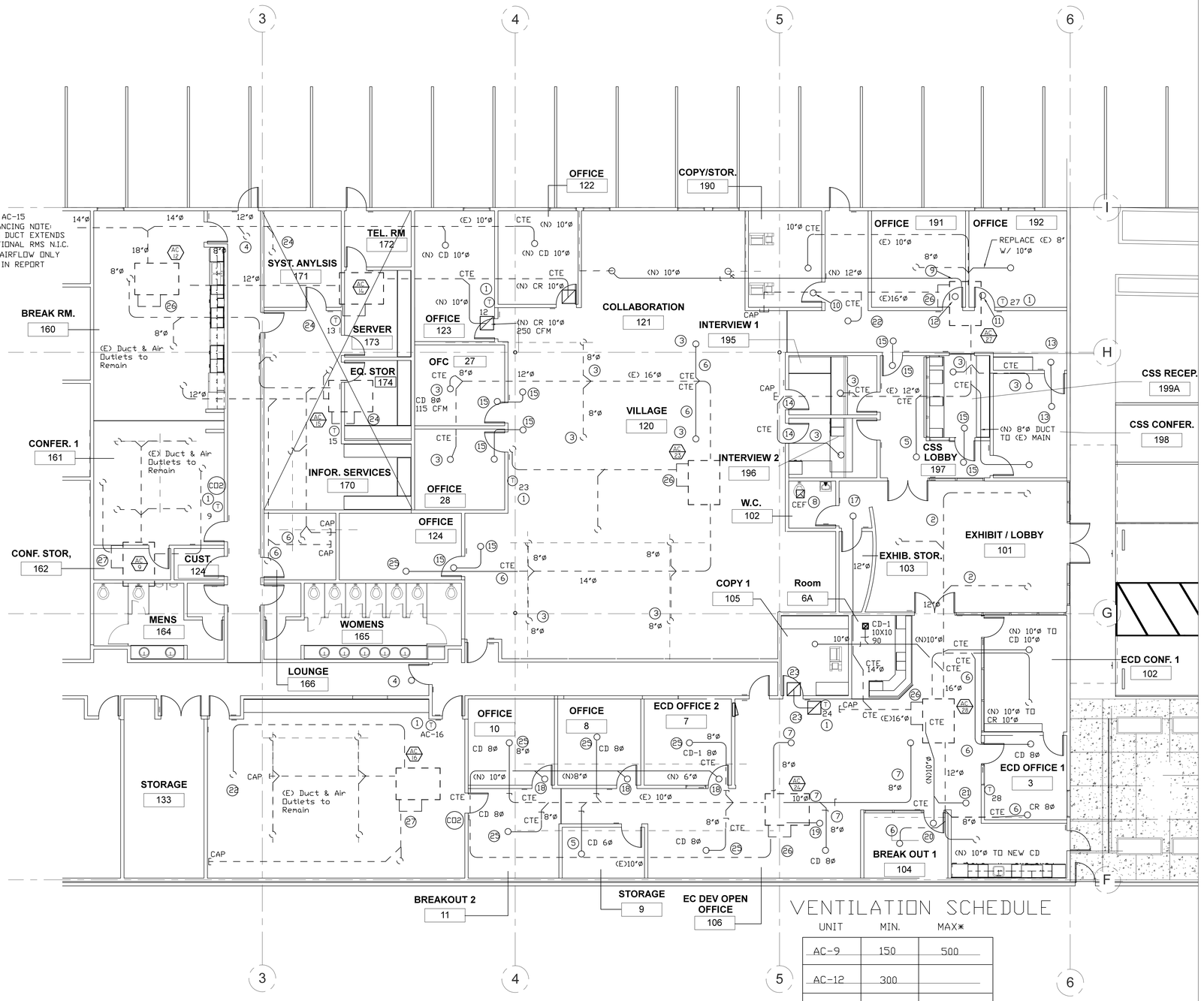

GENERAL NOTES:
EXISTING DUCT RUNS AND AIR OUTLET LOCATIONS BASED ON 1999 O&M MECHANICAL PLAN
EXISTING DUCT BRANCHES ARE ASSUMED TO HAVE VOLUME DAMPERS (VD) INSTALLED, INSTALL DAMPERS AS NEEDED TO BALANCE SYSTEM

1 / M-2.2 HVAC FLOOR IMPROVEMENT PLAN
1/8" = 1'-0"

VENTILATION SCHEDULE

UNIT	MIN.	MAX*
AC-9	150	500
AC-12	300	
AC-16	200	1000
AC-23	350	
AC-24	275	
AC-27	275	
AC-28	250	

* UNITS WITH ECONOMIZERS & OCCUPANCY SENSORS

NUMBERED SHEET NOTES:

1. RELOCATE AND REPLACE THERMOSTAT
2. DUCTWORK REMAINS UNCHANGED AIR BALANCE ONLY
3. RELOCATE AIR OUTLET & CTE 8"Ø DUCT WITH NEW 8"Ø
4. EXISTING AIR OUTLET TO REMAIN IN CORRIDOR, VERIFY IF FIRE OR SMOKE DAMPERED.
5. NEW 6"Ø DUCT TO EXISTING DUCT MAIN
6. NEW 8"Ø DUCT TO EXISTING DUCT MAIN
7. NEW DUCT TO EXISTING SUPPLY PLENUM
8. (N) CEF w/ 6"Ø DUCT UP TO (E) ROOF PENETRATION
9. (N) 12"Ø DUCT BACK TO SUPPLY PLENUM
10. (N) CR 10"Ø - 300 CFM W/ RA DUCT BRANCH W/ VD UP TO (E) 16"Ø
11. (N) CR 10"Ø - 350 CFM W/ RA DUCT BRANCH W/ VD UP TO (E) PLENUM
12. (N) CR 8"Ø - 150 CFM W/ RA DUCT BRANCH W/ VD UP TO (E) PLENUM OR RETURN DUCT
13. 10"Ø CEILING TRANSFER RETURNS W/ 10"Ø CONNECTING DUCTWORK
14. UNDERCUT DOORS 1" FOR RETURN AIRFLOW
15. 8"Ø CEILING TRANSFER RETURNS W/ 8"Ø CONNECTING DUCTWORK
16. NOT USED
17. 12"Ø DN TO (N) CR-1 14X14 450 CFM W/ FIRE DAMPER. RUN 12"Ø BACK TO (E) 16"Ø MAIN
18. 6"Ø DN TO (N) CR 6"Ø 100 CFM
19. (N) 14"Ø FROM PLENUM DN TO CR 14"Ø 700 CFM
20. (N) 6"Ø DN TO CR 6"Ø 50 CFM
21. (N) 8"Ø DN TO CR 8"Ø 200 CFM
22. CR 16"Ø W/ 16"Ø & VD UP TO (E) 16"Ø DUCT
23. 10"Ø CEILING TRANSFER RETURNS W/ 10"Ø CONNECTING DUCTWORK
24. NO HVAC WORK IN THIS AREA
25. NEW 8"Ø DN W/ VD TO NEW CD
26. INSTALL FRESH AIR INTAKE HOOD AT RETURN BLANK-OFF OF HVAC UNIT
27. INSTALL MICROMETL ECONOMIZER WITH BARO RELIEF & CO2 OCCUPANCY CONTROLLER

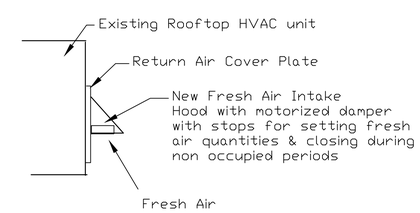

FRESH AIR INTAKE DETAIL

NOT TO SCALE

LEO COPPER, Jr.
MECHANICAL ENGINEER
95497 N. Bank Rogue River Rd.
Gold Beach, Oregon 97444
(541) 930-1014
OR LIC: 91779PE
CA LIC: M025931

PROJECT MANAGEMENT
ALAMEIDA ARCHITECTURE
CONSTRUCTION MANAGEMENT
555 S. MAIN STREET, SUITE 2
SEBASTOPOL, CA 95472
(707) 824-1219
WWW.ALAMEIDA.COM

PROJECT

TENANT IMPROVEMENTS FOR ECONOMIC DEVELOPMENT AND CHILD SUPPORT SERVICES

2420 6TH STREET
EUREKA, CA

REGISTERED ARCHITECT DONALD R. ALAMEIDA C-19767 Exp. 11/30/23 STATE OF CALIFORNIA

REGISTERED PROFESSIONAL ENGINEER LEO COPPER, JR. M025931 Exp. 12/31/2023 MECHANICAL STATE OF CALIFORNIA

No.	Description	Date

HVAC FLOOR PLAN

Project number	2108
Date	12/13/22
Drawn by	LC
Checked by	lc

M2.2

Scale 1/8" = 1'-0"

2/8/2022 7:08:51 AM

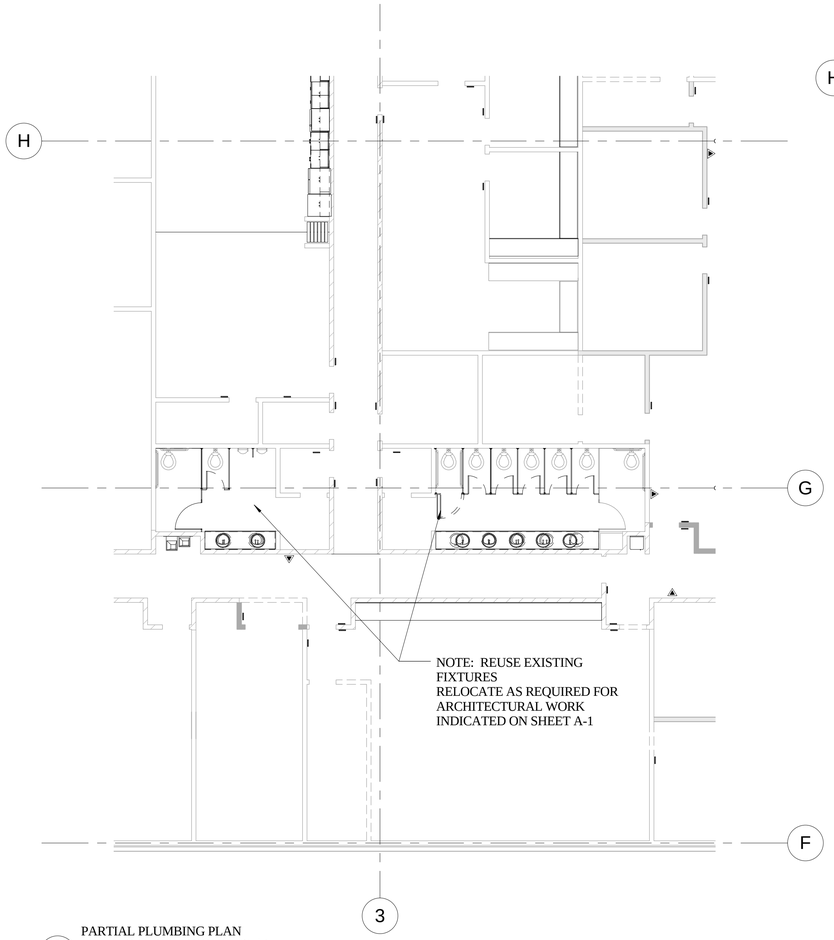

2 / P-1 PARTIAL PLUMBING PLAN
MULTI O.C. RESTROOMS - PLAN
1/8" = 1'-0"

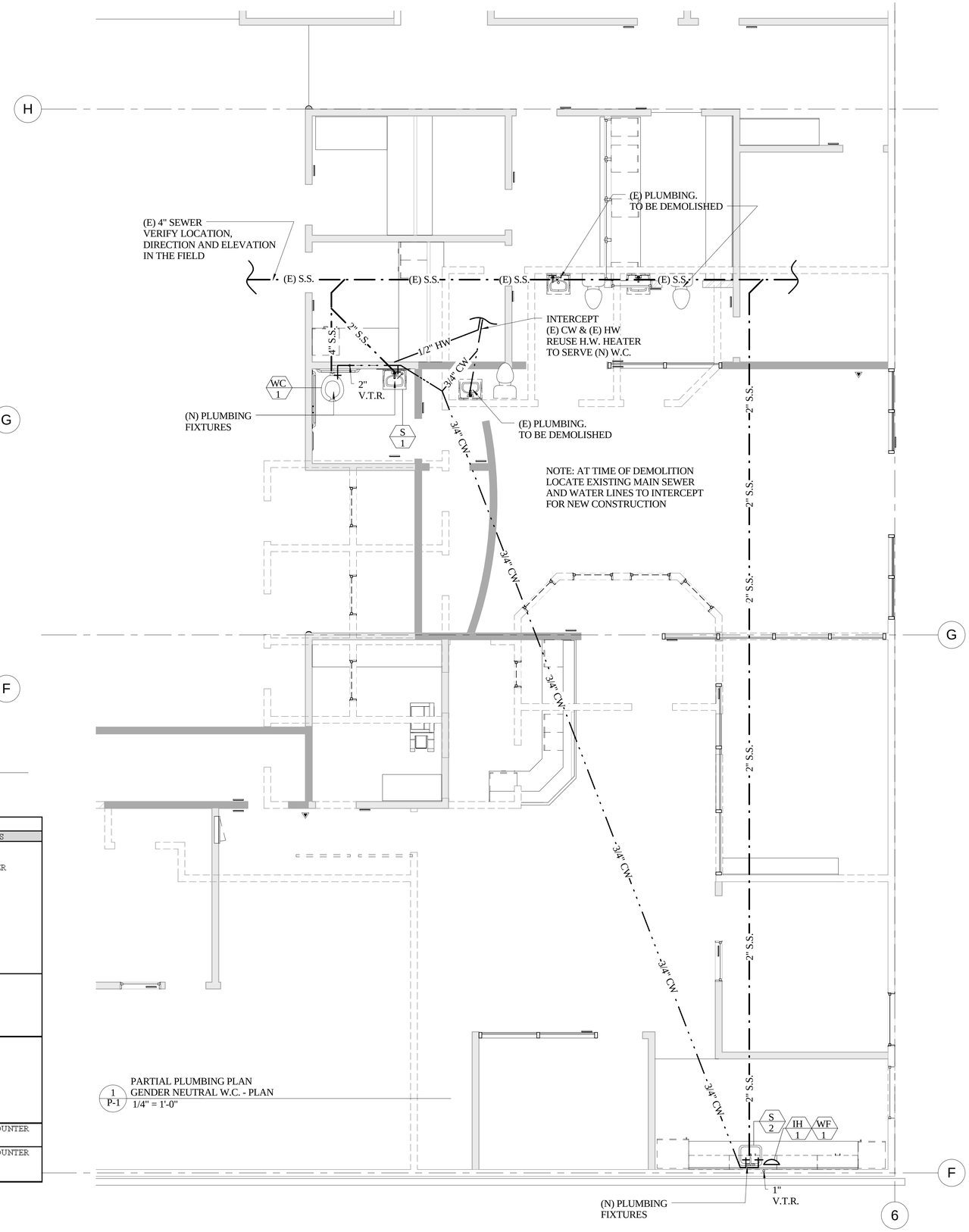

1 / P-1 PARTIAL PLUMBING PLAN
GENDER NEUTRAL W.C. - PLAN
1/4" = 1'-0"

PLUMBING FIXTURE SCHEDULE

ITEM	DESCRIPTION	SPECIFICATION	CW	HW	W	V	REMARKS
WC-1	WATER CLOSET	FIXTURE: WALL MOUNTED KOHLER MODEL KINGSTON K-4325, VITREOUS CHINA, ELONGATED BOWL, WITH CARRIER, ADA COMPLIANT, 1.28 GALLON FLUSH, TOP SPUD. SEE ARCHITECTURAL DRAWINGS FOR MOUNTING HEIGHTS. WHITE FINISH. FLUSHOMETER: SLOAN ROYAL, ADA COMPLIANT LEVER, 1.28 GALLON PER FLUSH. SEAT: KOHLER STRONGHOLD MODEL K-4731-C. ADA COMPLIANT, INTEGRAL CHECK HINGE, STAINLESS STEEL HARDWARE, WHITE FINISH	3/4"	-	4"	2"	PROVIDE CARRIER SUPPORT
S-1	LAVATORY SINK	FIXTURE: KOHLER "SOHO" MODEL K-2084-NL W/ SOAP/LOTION HOLE. FAUCET: CHICAGO FAUCETS MODEL 857-E2805-665PSHAB 0.5 GPM @ 60PSI MAX. DURATION 0.25 MINUTES. BOBRICK B-822 SOAP DISPENSER	1/2"	1/2"	2"	1 1/2"	
S-2	COFFE BAR SINK	FIXTURE: ELKAY MODEL CELEBRITY CDKAD251765. ADA COMPLIANT STAINLESS SINK WITH FAUCET, 2 LM (LEFT MIDDLE) HOLE CONFIGURATION, DRAIN NUMBER LVR 18. PROVIDE HOT WATER WITH POINT OF USE HOT WATER HEATER - IH-1 AND FILTER WF-1 FAUCETS: ELKAY DUAL HANDLE MODEL LKD2223C. ADA COMPLIANT. BOBRICK B-822 SOAP DISPENSER	1/2"	1/2"	2"	1 1/2"	
IH-1	INSTANT HOT WATER HEATER	A.O. SMITH EJC-2 WITH 1500 WATT 120V ELEMENT, 7 GALLONS PER HOUR RECOVERY, OR APPROVED EQUAL.					MOUNT UNDER COUNTER
WF-1	WATER FILTER	CUZN UC-200 UNDER COUNTER WATER FILTER - 50K ULTRA HIGH CAPACITY, OOR APPROVED EQUAL.					MOUNT UNDER COUNTER

PROJECT MANAGEMENT
ALAMEIDA ARCHITECTURE
CONSTRUCTION MANAGEMENT
555 S. MAIN STREET, SUITE 2
SEBASTOPOL, CA 95472
(707) 824-1219
WWW.ALAMEIDA.COM

COUNTY OF HUMBOLDT
The Home of the Redwoods

PROJECT

TENANT IMPROVEMENTS FOR ECONOMIC DEVELOPMENT AND CHILD SUPPORT SERVICES

2420 6TH STREET
EUREKA, CA

REGISTERED ARCHITECT
DONALD R. ALAMEIDA
C-19767
Exp. 11/30/23
STATE OF CALIFORNIA

No.	Description	Date
1.	PLAN CHECK COMMENTS	12/12/22

PLUMBING PLAN

Project number	2108
Date	5/8/22
Drawn by	Author
Checked by	Checker

P-1

Scale As indicated

5/2/2023 4:56:11 PM

Indoor Lighting Mandatory Measures:

110.9 LIGHTING CONTROLS AND COMPONENTS
ALL LIGHTING CONTROL DEVICES AND SYSTEMS, AND ALL LIGHT SOURCES SHALL MEET THE APPLICABLE REQUIREMENTS OF 110.9.

110.12(c) DEMAND RESPONSIVE LIGHTING CONTROLS
LIGHTING CONTROLS IN NONRESIDENTIAL BUILDINGS >10,000 FT2 SHALL BE CAPABLE OF AUTOMATICALLY REDUCING LIGHTING POWER IN RESPONSE TO A DEMAND RESPONSE SIGNAL. GENERAL LIGHTING SHALL BE REDUCED PER TABLE 130.1-A. CONTROLS SHALL DEMONSTRATE A LIGHTING POWER REDUCTION OF AT LEAST 15% BELOW THE TOTAL INSTALLED LIGHTING POWER IN CONTROLLED SPACES.

130.0 GENERAL LUMINAIRE REQUIREMENTS
ALL LUMINAIRES SHALL BE FACTORY-LABELLED PER 130.0(c).
ENERGY MANAGEMENT CONTROL SYSTEMS (EMCS) SHALL MEET REQUIREMENTS OF 130.0(e).

130.1(a) MANUAL AREA CONTROLS
EACH ROOM OR AREA WITH FLOOR-TO-CEILING WALLS IN THIS BUILDING SHALL HAVE LIGHTING CONTROLS THAT ALLOW LIGHTING TO BE MANUALLY TURNED ON AND OFF MANUAL CONTROLS SHALL:

1. BE READILY ACCESSIBLE
2. BE LOCATED IN THE SAME ENCLOSED AREA WITH THE LIGHTING IT CONTROLS.
3. PROVIDE SEPARATE CONTROL OF GENERAL, FLOOR, WALL, WINDOW CASE DISPLAY, ORNAMENTAL AND SPECIAL EFFECTS LIGHTING SO EACH TYPE CAN BE TURNED ON AND OFF SEPARATELY WITHOUT AFFECTING OTHER LIGHTING OR EQUIPMENT.

130.1(b) MULTILEVEL LIGHTING CONTROLS
GENERAL LIGHTING IN ALL ROOMS AND AREAS 100 FT2 OR GREATER AND WITH MORE THAN 0.5 WATTS PER FT2 OF LIGHTING LOAD SHALL HAVE MULTILEVEL CONTROLS THAT ALLOW LIGHT LEVELS TO BE ADJUSTED UP AND DOWN. CONTROLS SHALL PROVIDE NUMBER OF CONTROL STEPS AND UNIFORM LIGHT LEVELS PER TABLE 130.1-A.

130.1(c): SHUTOFF CONTROLS
ALL INSTALLED INDOOR LIGHTING SHALL BE EQUIPPED WITH CONTROLS TO AUTOMATICALLY REDUCE LIGHTING POWER WHEN SPACE IS TYPICALLY UNOCCUPIED.

130.1(c)1: CONTROL REQUIREMENTS
ALL INSTALLED INDOOR LIGHTING SHALL HAVE ALL OF THE FOLLOWING:
A. CONTROL(S) CAPABLE OF AUTOMATICALLY SHUTTING OFF ALL LIGHTING IN THE SPACE WHEN TYPICALLY UNOCCUPIED (OCCUPANT SENSING CONTROL, AUTOMATIC TIME-SWITCH CONTROL, OR OTHER)
B. SEPARATE CONTROLS FOR LIGHTING ON EACH FLOOR (OTHER THAN STAIRWELLS)
C. SEPARATE CONTROLS FOR A SPACE ENCLOSED BY CEILING HEIGHT PARTITIONS NOT EXCEEDING 5,000 FT2

C. SEPARATE CONTROLS FOR A SPACE ENCLOSED BY CEILING HEIGHT PARTITIONS NOT EXCEEDING 5,000 FT2

D. SEPARATE CONTROLS FOR GENERAL, DISPLAY, ORNAMENTAL, AND DISPLAY CASE LIGHTING

E. AUTOMATIC TIME-SWITCH CONTROLS MAY INCLUDE MANUAL-ON MODE

130.1(c)2: COUNTDOWN TIMER SWITCHES
COUNTDOWN TIMER SWITCHES ONLY ALLOWED TO MEET SHUT-OFF REQUIREMENTS IN CLOSETS <70 FT2 AND SERVER AISLES IN SERVER ROOMS. MAXIMUM TIMER

Indoor Lighting Mandatory Measures:

130.1(c)6 PARTIAL OR FULL-OFF OCCUPANT SENSORS
PROVIDE PARTIAL OR FULL-OFF OCCUPANT SENSORS, IN ADDITION TO SHUTOFF CONTROLS PER 130.1(c)1 AND 130.1(c)2, IN THE FOLLOWING SPACES:

- AISLE WAYS AND OPEN AREAS IN WAREHOUSES
- LIBRARY BOOK STACK AISLES
- CORRIDORS AND STAIRWELLS

130.1(d) AUTOMATIC DAYLIGHTING CONTROLS
ALL GENERAL LIGHTING IN THE FOLLOWING ZONES SHALL HAVE CONTROLS THAT AUTOMATICALLY ADJUST THE INSTALLED LIGHTING POWER UP AND DOWN TO KEEP TOTAL LIGHT LEVEL STABLE AS INCOMING DAYLIGHT CHANGES:

- PRIMARY SIDELIT DAYLIT ZONES
- SKYLIT DAYLIT ZONES
- COMBINED PRIMARY AND SECONDARY SIDELIT DAYLIT ZONES IN PARKING GARAGES

ALL DAYLIT ZONES MUST BE SHOWN ON PLANS.

NOTE: PARKING AREAS ON THE ROOF OF A PARKING STRUCTURE ARE NOT SKYLIT DAYLIT AREAS.

IN ADDITION, AUTOMATIC DAYLIGHTING CONTROLS SHALL PROVIDE SEPARATE CONTROL FOR LUMINAIRES IN EACH TYPE OF DAYLIT ZONE. LUMINAIRES THAT FALL IN BOTH SKYLIT AND SIDELIT DAYLIT ZONE SHALL BE CONTROLLED AS PART OF THE SKYLIT ZONE.

130.1(d)3 THE AUTOMATIC DAYLIGHTING CONTROLS SHALL ACHIEVE ALL OF THE FOLLOWING:
A. ADJUST LIGHTING VIA CONTINUOUS DIMMING OR THE NUMBER OF CONTROL STEPS PROVIDED BY THE MULTILEVEL CONTROLS (FOR SPACES REQUIRED TO INSTALL MULTILEVEL CONTROLS UNDER SECTION 130.1(b)).

B. FOR EACH SPACE, ENSURE COMBINED ILLUMINANCE FROM CONTROLLED LIGHTING AND DAYLIGHT IS NOT LESS THAN ILLUMINANCE FROM CONTROLLED LIGHTING WHEN NO DAYLIGHT IS AVAILABLE.

C. ENSURE THAT THE GENERAL LIGHTING POWER IN A DAYLIT ZONE SHALL BE REDUCED BY AT LEAST 65% WHEN DAYLIGHT ILLUMINANCE IN THAT ZONE IS GREATER THAN 150% OF DESIGN ILLUMINANCE RECEIVED FROM THE GENERAL LIGHTING SYSTEM AT FULL POWER (NOT APPLICABLE TO PARKING GARAGES).

D. (FOR PARKING GARAGES ONLY) ENSURE THAT WHEN ILLUMINANCE LEVELS MEASURED AT THE FARTHEST EDGE OF THE SECONDARY SIDELIT ZONE AWAY FROM GLAZING OR OPENING ARE GREATER THAN 150% OF THE ILLUMINANCE PROVIDED BY THE CONTROLLED LIGHTING WHEN NO DAYLIGHT IS AVAILABLE, THE CONTROLLED LIGHTING POWER CONSUMPTION IS ZERO.

130.1(d)4 WHEN PHOTOSENSORS ARE LOCATED WITHIN THE DAYLIT ZONE, AT LEAST ONE PHOTOSENSOR SHALL BE LOCATED SO THAT IT IS NOT READILY ACCESSIBLE TO UNAUTHORIZED PERSONNEL.

130.1(d)5 THE LOCATION WHERE CALIBRATION ADJUSTMENTS ARE MADE TO AUTOMATIC DAYLIGHTING CONTROLS SHALL BE READILY ACCESSIBLE TO AUTHORIZED PERSONNEL BUT MAY BE INSIDE A LOCKED CASE OR UNDER A COVER THAT REQUIRES A TOOL FOR ACCESS.

Indoor Lighting Mandatory Measures:

130.1(f) CONTROL INTERACTIONS
EACH LIGHTING CONTROL INSTALLED TO MEET 130.1 REQUIREMENTS SHALL INCORPORATE THE FUNCTIONS OF OTHER LIGHTING CONTROLS REQUIRED BY THIS SECTION.

1. FOR GENERAL LIGHTING, MANUAL AREA CONTROL SHALL PERMIT THE LEVEL OF LIGHT PROVIDED WHILE LIGHTING IS ON TO BE SET OR ADJUSTED BY CONTROLS SPECIFIED IN 130.1(b), (c), (d) and (e).

2. MANUAL AREA CONTROL SHALL PERMIT SHUTOFF CONTROL TO TURN THE LIGHTING DOWN OR OFF.

3. MULTILEVEL CONTROL SHALL PERMIT THE AUTOMATIC DAYLIGHTING CONTROL TO ADJUST ELECTRIC LIGHTING IN RESPONSE TO DAYLIGHT.

4. MULTILEVEL CONTROL SHALL PERMIT THE DEMAND RESPONSIVE (DR) CONTROL TO ADJUST LIGHTING DURING A DR EVENT THEN RETURN IT TO THE LEVEL SET BY THE CONTROL AFTER THE EVENT.

5 SHUTOFF CONTROL SHALL PERMIT THE MANUAL AREA CONTROL TO TURN THE LIGHTING ON.

6. AUTOMATIC DAYLIGHTING CONTROL SHALL PERMIT MULTILEVEL LIGHTING CONTROL TO ADJUST THE LIGHTING LEVEL.

7. FOR LIGHTING CONTROLLED BY MULTILEVEL LIGHTING CONTROLS AND OCCUPANT SENSING CONTROLS THAT PROVIDE AUTOMATIC-ON FUNCTION, CONTROLS SHALL PROVIDE A PARTIAL-ON FUNCTION THAT IS CAPABLE OF AUTOMATICALLY ACTIVATING BETWEEN 50-70% OF CONTROLLED LIGHTING POWER.

STATE OF CALIFORNIA
Indoor Lighting
NRCC-LTI-E — CALIFORNIA ENERGY COMMISSION

CERTIFICATE OF COMPLIANCE			**NRCC-LTI-E**
Project Name:	County of Humboldt Tenant Improvements 2022 6th Street, Eureka	**Report Page:**	**(Page 5 of 7)**
Project Address:		**Date Prepared:**	2022-09-16T16:18:43-04:00

I. LIGHTING POWER ALLOWANCE: COMPLETE BUILDING OR AREA CATEGORY METHODS
Each area complying using the Complete Building or Area Category Methods per §140.6(b) are included in this table. Column 06 indicates if additional lighting power allowances per §140.6(c) or adjustments per §140.6(a) are being used .

Conditioned Spaces

01	02	03	04	05	06	
Area Description	Complete Building or Area Category Primary Function Area	Allowed Density (W/ft²)	Area (ft²)	Allowed Wattage (Watts)	Additional Allowance / Adjustment	
					Area Category	PAF
GENERAL OFFICE AREAS	Office	0.65	14,280	9,282	No	No
		TOTALS:	14,280	9,282	See Tables J, or P for detail	

J. ADDITIONAL ALLOWANCE: AREA CATEGORY METHOD QUALIFYING LIGHTING SYSTEM
This section does not apply to this project.

K. TAILORED METHOD GENERAL LIGHTING POWER ALLOWANCE
This section does not apply to this project.

L. ADDITIONAL LIGHTING ALLOWANCE: TAILORED WALL DISPLAY
This section does not apply to this project.

M. ADDITIONAL LIGHTING ALLOWANCE: TAILORED FLOOR AND TASK LIGHTING
This section does not apply to this project.

N. ADDITIONAL LIGHTING ALLOWANCE: TAILORED ORNAMENTAL/SPECIAL EFFECTS
This section does not apply to this project.

O. ADDITIONAL LIGHTING ALLOWANCE: TAILORED VERY VALUABLE MERCHANDISE
This section does not apply to this project.

P. POWER ADJUSTMENT: LIGHTING CONTROL CREDIT (POWER ADJUSTMENT FACTOR (PAF))
This section does not apply to this project.

Registration Number: Generated Date/Time: Documentation Software: Energy Code Ace

STATE OF CALIFORNIA
Indoor Lighting
NRCC-LTI-E — CALIFORNIA ENERGY COMMISSION

CERTIFICATE OF COMPLIANCE			**NRCC-LTI-E**
Project Name:	County of Humboldt Tenant Improvements 2022 6th Street, Eureka	**Report Page:**	**(Page 6 of 7)**
Project Address:		**Date Prepared:**	2022-09-16T16:18:43-04:00

Q. RATED POWER REDUCTION COMPLIANCE FOR ALTERATIONS
This section does not apply to this project.

R. 80% LIGHTING POWER FOR ALL ALTERATIONS - CONTROLS EXCEPTIONS
This section does not apply to this project.

S. DAYLIGHT DESIGN POWER ADJUSTMENT FACTOR (PAF)
This section does not apply to this project.

T. DECLARATION OF REQUIRED CERTIFICATES OF INSTALLATION
Selections have been made based on information provided in this document. If any selection have been changed by permit applicant, an explanation should be included in Table E. Additional Remarks. These documents must be provided to the building inspector during construction and can be found online at https://www.energy.ca.gov/title24/2019standards/2019_compliance_documents/Nonresidential_Documents/NRCI/

Form/Title
NRCI-LTI-01-E - Must be submitted for all buildings
NRCI-LTI-02-E- Must be submitted for a lighting control system, or for an Energy Management Control System (EMCS), to be recognized for compliance.

U. DECLARATION OF REQUIRED CERTIFICATES OF ACCEPTANCE
Selections have been made based on information provided in this document. If any selection have been changed by the permit applicant, an explanation should be included in Table E. Additional Remarks. These documents must be provided to the building inspector during construction and any with "-A" in the form name must be completed through an Acceptance Test Technician Certification Provider (ATTCP). For more information visit: http://www.energy.ca.gov/title24/attcp/providers.html

Form/Title	Systems/Spaces To Be Field Verified
NRCA-LTI-02-A - Must be submitted for occupancy sensors and automatic time switch controls.	GENERAL OFFICE AREAS
NRCA-LTI-03-A - Must be submitted for automatic daylight controls.	GENERAL OFFICE AREAS

STATE OF CALIFORNIA
Indoor Lighting
NRCC-LTI-E — CALIFORNIA ENERGY COMMISSION

CERTIFICATE OF COMPLIANCE			**NRCC-LTI-E**
Project Name:	County of Humboldt Tenant Improvements 2022 6th Street, Eureka	**Report Page:**	**(Page 7 of 7)**
Project Address:		**Date Prepared:**	2022-09-16T16:18:43-04:00

DOCUMENTATION AUTHOR'S DECLARATION STATEMENT
I certify that this Certificate of Compliance documentation is accurate and complete.

Documentation Author Name:	DONALD ALAMEIDA	Documentation Author Signature:	
Company:	Alameida Architecture	Signature Date:	5/10/22
Address:	555 S. Main St. Suite 2	CEA/ HERS Certification Identification (If applicable):	
City/State/Zip:	Sebastopol, CA 95472	Phone:	707 824-1219

RESPONSIBLE PERSON'S DECLARATION STATEMENT
I certify the following under penalty of perjury, under the laws of the State of California:

1. The information provided on this Certificate of Compliance is true and correct.
2. I am eligible under Division 3 of the Business and Professions Code to accept responsibility for the building design or system design identified on this Certificate of Compliance (responsible designer)
3. The energy features and performance specifications, materials, components, and manufactured devices for the building design or system design identified on this Certificate of Compliance conform to the requirements of Title 24, Part 1 and Part 6 of the California Code of Regulations.
4. The building design features or system design features identified on this Certificate of Compliance are consistent with the information provided on other applicable compliance documents, worksheets, calculations, plans and specifications submitted to the enforcement agency for approval with this building permit application.
5. I will ensure that a completed signed copy of this Certificate of Compliance shall be made available with the building permit(s) issued for the building, and made available to the enforcement agency for all applicable inspections. I understand that a completed signed copy of this Certificate of Compliance is required to be included with the documentation the builder provides to the building owner at occupancy.

Responsible Designer Name:	DONALD ALAMEIDA	Responsible Designer Signature:	
Company:	Alameida Architecture	Date Signed:	5/10/22
Address:	555 S. Main St. Suite 2	License:	C-19767
City/State/Zip:	Sebastopol, CA 95472	Phone:	707 824-1219

Registration Number: Generated Date/Time: Documentation Software: Energy Code Ace

CA Building Energy Efficiency Standards - 2019 Nonresidential Compliance — Report Version: 2019.1.003, Schema Version: rev 20200601 — Compliance ID: 67097, Report Generated: 2022-09-16 13:18:46

STATE OF CALIFORNIA
Indoor Lighting
NRCC-LTI-E — CALIFORNIA ENERGY COMMISSION

CERTIFICATE OF COMPLIANCE			**NRCC-LTI-E**
Project Name:	County of Humboldt Tenant Improvements 2022 6th Street, Eureka	**Report Page:**	**(Page 1 of 7)**
Project Address:		**Date Prepared:**	2022-09-16T16:18:43-04:00

This document is used to demonstrate compliance with requirements in §110.9, §110.12(c), §130.0, §130.1, §140.6 and §141.0(b)2 for indoor lighting scopes using the prescriptive path.

A. GENERAL INFORMATION

01	Project Location (city)	Eureka	04	Total Conditioned Floor Area (ft²)	14,408
02	Climate Zone	1	05	Total Unconditioned Floor Area (ft²)	0
03	Occupancy Types Within Project (select all that apply):		06	# of Stories (Habitable Above Grade)	1

- Office

B. PROJECT SCOPE
This table includes any lighting systems that are within the scope of the permit application and are demonstrating compliance using the prescriptive path outlined in §140.6 or §141.0(b)2 for alterations.

Scope of Work	Conditioned Spaces		Unconditioned Spaces	
01	02	03	04	05
My Project Consists of (check all that apply):	Calculation Method	Area (ft²)	Calculation Method	Area (ft²)
☐ New Lighting System	N/A	0	N/A	0
☐ New Lighting System - Parking Garage	N/A	0	N/A	0
☒ Altered Lighting System	Complete Building Method	14408	N/A	0
Total Area of Work (ft²)	14408			

STATE OF CALIFORNIA
Indoor Lighting
NRCC-LTI-E — CALIFORNIA ENERGY COMMISSION

CERTIFICATE OF COMPLIANCE			**NRCC-LTI-E**
Project Name:	County of Humboldt Tenant Improvements 2022 6th Street, Eureka	**Report Page:**	**(Page 2 of 7)**
Project Address:		**Date Prepared:**	2022-09-16T16:18:43-04:00

C. COMPLIANCE RESULTS
If any cell on this table says "DOES NOT COMPLY" or "COMPLIES with Exceptional Conditions" refer to Table D. for guidance.

Lighting in conditioned and unconditioned spaces must not be combined for compliance per §140.6(b)1	Allowed Lighting Power per §140.6(b) (Watts)						Adjusted Lighting Power per §140.6(a) (Watts)				Compliance Results
	01	02	03	04		05	06	07		08	09
	Complete Building §140.6(c)1	Area Category §140.6(c)2	Area Category Additional §140.6(c)2G (+)	Tailored §140.6(c)3 (+)	=	Total Allowed (Watts)	≥	Total Designed (Watts)	Adjustments PAF Lighting Control Credits §140.6(a)2 (-)	= Total Adjusted (Watts) *Includes Adjustments	05 must be >= 08 §140.6
	(See Table I)	(See Table I)	(See Table J)	(See Table K)				(See Table F)	(See Table P)		
Conditioned	9,282				=	9,282	≥	7,198.4		= 7198.4	COMPLIES
Unconditioned					=		≥			=	
Controls Compliance (See Table H for Details)											COMPLIES
Rated Power Reduction Compliance (See Table Q for Details)											

D. EXCEPTIONAL CONDITIONS
This table is auto-filled with uneditable comments because of selections made or data entered in tables throughout the form.
Track Lighting has been included in this project, details are provided in Table G.

E. ADDITIONAL REMARKS
This table includes remarks made by the permit applicant to the Authority Having Jurisdiction.

F. INDOOR LIGHTING FIXTURE SCHEDULE
This table includes all permanent designed lighting and all portable lighting in offices.
Designed Wattage: Conditioned Spaces

01	02	03	04	05	06	07	08	09	10	
Name or Item Tag	Complete Luminaire Description	Modular (Track) Fixture	Small Aperture & Color Change[1]	Watts per luminaire[2]	How is Wattage determined	Total Number of Luminaires	Excluded per §140.6(a)3	Design Watts	Field Inspector	
									Pass	Fail

STATE OF CALIFORNIA
Indoor Lighting
NRCC-LTI-E — CALIFORNIA ENERGY COMMISSION

CERTIFICATE OF COMPLIANCE			**NRCC-LTI-E**
Project Name:	County of Humboldt Tenant Improvements 2022 6th Street, Eureka	**Report Page:**	**(Page 3 of 7)**
Project Address:		**Date Prepared:**	2022-09-16T16:18:43-04:00

F. INDOOR LIGHTING FIXTURE SCHEDULE

A	LED RETROFIT FOR (E) PARBOLIC LIGHTS	No	No	30	Mfr. Spec	83	No	2,490	☐	☐
B	LED RETROFIT/RELOCATE EXISTING PARBOLIC	No	No	30	Mfr. Spec	65	No	1,950	☐	☐
D	1X4 LED PENDENT	No	No	34.9	Mfr. Spec	12	No	418.8	☐	☐
F	LED RECESSED CAN LIGHT	No	No	18	Mfr. Spec	59	No	1,062	☐	☐
H	2X2 LAY IN LED	No	No	33.1	Mfr. Spec	1	No	33.1	☐	☐
L	LED RING PENDENT	No	No	48.3	Mfr. Spec	5	No	241.5	☐	☐
K	TRACK LIGHT FIXTURE SILO DYNAMIC	Yes	No	5,400	See Other Section	40	Yes	NA	☐	☐
E	EXISTING FITURE TO REMAIN	No	No	59	CEC Default	17	No	1,003	☐	☐
					Total Designed Watts: CONDITIONED SPACES			7,198.4		

[1]FOOTNOTE: Design Watts for small aperture and color changing luminaires which qualify per §140.6(a)4B is adjusted to be 75% of their rated wattage. Table F automatically makes this adjustment, the permit applicant should enter full rated wattage in column 05.

[2]Authority Having Jurisdiction may ask for Luminaire cut sheets to confirm wattage used for compliance per §130.0(c) Wattage used must be the maximum rated for the luminaire, not the lamp.

G. MODULAR LIGHTING SYSTEMS
This table calculates wattage for modular lighting systems/ track lighting fixtures indicated on Table F and transfers wattage to Table F.

01	02	03						04
Name or Item Tag	Complete Track Description	Calculation Method per §130.0(c)6						Track Wattage
K	TRACK LIGHT FIXTURE SILO DYNAMIC	☒	i Installed Luminaires vs Default 30 W/ft	☐	ii Current Limiter	☐	iii Overcurrent Protection Panel	☐ iv Power supplied by driver, power supply or transformer[1]

STATE OF CALIFORNIA
Indoor Lighting
NRCC-LTI-E — CALIFORNIA ENERGY COMMISSION

CERTIFICATE OF COMPLIANCE			**NRCC-LTI-E**
Project Name:	County of Humboldt Tenant Improvements 2022 6th Street, Eureka	**Report Page:**	**(Page 4 of 7)**
Project Address:		**Date Prepared:**	2022-09-16T16:18:43-04:00

G. MODULAR LIGHTING SYSTEMS

	Number of luminaires in system	x	Rated Watts per luminaire	=	Total Watts	OR	Linear ft of track or busway	x	Default W/LF 30	=	Total Watts	5400
							180		30		5400	

[1]FOOTNOTE: For power-over-Ethernet lighting systems, power provided to installed non-lighting devices may be subtracted from the total power rating of the power-over-Ethernet system.

H. INDOOR LIGHTING CONTROLS (Not including PAFs)
*This table includes lighting controls for conditioned and unconditioned spaces. When a control having a * is shown, the notes section of this table provides more detail on how compliance is achieved. The lighting controls section of the Compliance Summary Table on the first page will show "DOES NOT COMPLY" if the notes are left blank.*

Building Level Controls

01	02	03	
		Field Inspector	
Mandatory Demand Response §110.12(c)	Shut-off controls §130.1(c)	Pass	Fail
Not Required- Building <= 0.5W/SF	See Area/Space Level Controls	☐	☐

Area Level Controls

04	05	06	07	08	09	10	11	12	
Area Description	Complete Building or Area Category Primary Function Area	Area Controls §130.1(a)	Multi-Level Controls §130.1(b)	Shut-Off Controls §130.1(c)	Primary/Skylit Daylighting §130.1(d)	Secondary Daylighting §140.6(d)	Interlocked Systems §140.6(a)1	Field Inspector	
								Pass	Fail
GENERAL OFFICE AREAS	Office	Manual ON/OFF	Dimmer	Occupancy Sensor	Included	Included	No	☐	☐

*NOTES: Controls with a * require a note in the space below explaining how compliance is achieved.
EX: Conference 1: Primary/Skylight Daylighting: Exempt because less than 120 watts of general lighting; EXCEPTION 1 to §130.1(d)2

13
Plan Sheet Showing Daylit Zones:
E-4

Registration Number: Generated Date/Time: Documentation Software: Energy Code Ace

CA Building Energy Efficiency Standards - 2019 Nonresidential Compliance — Report Version: 2019.1.003, Schema Version: rev 20200601 — Compliance ID: 67097, Report Generated: 2022-09-16 13:18:46

PROJECT MANAGEMENT

ALAMEIDA ARCHITECTURE

CONSTRUCTION MANAGEMENT

555 S. MAIN STREET, SUITE 2
SEBASTOPOL, CA 95472
(707) 824-1219
WWW.ALAMEIDA.COM

COUNTY OF HUMBOLDT — The Home of the Redwoods

PROJECT

TENANT IMPROVEMENTS FOR ECONOMIC DEVELOPMENT AND CHILD SUPPORT SERVICES

2420 6TH STREET
EUREKA, CA

REGISTERED ARCHITECT — DONALD R. ALAMEIDA — C-19767 — Exp. 1/30/23 — STATE OF CALIFORNIA

No.	Description	Date
1.	PLAN CHECK COMMENTS	12/12/22

TITLE 24 INDOOR LIGHTING

Project number	2108
Date	5/8/22
Drawn by	Author
Checked by	Checker

T24-1

Scale

5/2/2023 4:56:16 PM

STATE OF CALIFORNIA
Outdoor Lighting
NRCC-LTO-E — CALIFORNIA ENERGY COMMISSION

CERTIFICATE OF COMPLIANCE			NRCC-LTO-E
Project Name:	County of Humboldt Tenant Improvements 2022 6th Street, Eureka	Report Page:	(Page 7 of 7)
Project Address:		Date Prepared:	2022-05-10T18:30:07-04:00

DOCUMENTATION AUTHOR'S DECLARATION STATEMENT
I certify that this Certificate of Compliance documentation is accurate and complete.

Documentation Author Name:	DONALD ALAMEIDA	Documentation Author Signature:	
Company:	Alameida Architecture	Signature Date:	5/10/22
Address:	555 S. Main St. Suite 2	CEA/ HERS Certification Identification (if applicable):	
City/State/Zip:	Sebastopol, CA 95472	Phone:	707 824-1219

RESPONSIBLE PERSON'S DECLARATION STATEMENT
I certify the following under penalty of perjury, under the laws of the State of California:
1. The information provided on this Certificate of Compliance is true and correct.
2. I am eligible under Division 3 of the Business and Professions Code to accept responsibility for the building design or system design identified on this Certificate of Compliance (responsible designer)
3. The energy features and performance specifications, materials, components, and manufactured devices for the building design or system design identified on this Certificate of Compliance conform to the requirements of Title 24, Part 1 and Part 6 of the California Code of Regulations.
4. The building design features or system design features identified on this Certificate of Compliance are consistent with the information provided on other applicable compliance documents, worksheets, calculations, plans and specifications submitted to the enforcement agency for approval with this building permit application.
5. I will ensure that a completed signed copy of this Certificate of Compliance shall be made available with the building permit(s) issued for the building, and made available to the enforcement agency for all applicable inspections. I understand that a completed signed copy of this Certificate of Compliance is required to be included with the documentation the builder provides to the building owner at occupancy.

Responsible Designer Name:	DONALD ALAMEIDA	Responsible Designer Signature:	
Company:	Alameida Architecture	Date Signed:	5/10/22
Address:	555 S. Main St. Suite 2	License:	C19767
City/State/Zip:	Sebastopol, CA 95472	Phone:	707 824-1219

ENERGY MANAGEMENT CONTROL SYSTEMS (EMCS) SHALL MEET REQUIREMENTS OF 130.0(e).

130.1(a) MANUAL AREA CONTROLS
EACH ROOM OR AREA WITH FLOOR-TO-CEILING WALLS IN THIS BUILDING SHALL HAVE LIGHTING CONTROLS THAT ALLOW LIGHTING TO BE MANUALLY TURNED ON AND OFF MANUAL CONTROLS SHALL:
1. BE READILY ACCESSIBLE
2. BE LOCATED IN THE SAME ENCLOSED AREA WITH THE LIGHTING IT CONTROLS.
3. PROVIDE SEPARATE CONTROL OF GENERAL, FLOOR, WALL, WINDOW CASE DISPLAY, ORNAMENTAL AND SPECIAL EFFECTS LIGHTING SO EACH TYPE CAN BE TURNED ON AND OFF SEPARATELY WITHOUT AFFECTING OTHER LIGHTING OR EQUIPMENT.

130.1(b) MULTILEVEL LIGHTING CONTROLS
GENERAL LIGHTING IN ALL ROOMS AND AREAS 100 FT2 OR GREATER AND WITH MORE THAN 0.5 WATTS PER FT2 OF LIGHTING LOAD SHALL HAVE MULTILEVEL CONTROLS THAT ALLOW LIGHT LEVELS TO BE ADJUSTED UP AND DOWN. CONTROLS SHALL PROVIDE NUMBER OF CONTROL STEPS AND UNIFORM LIGHT LEVELS PER TABLE 130.1-A.

130.1(c): SHUTOFF CONTROLS
ALL INSTALLED INDOOR LIGHTING SHALL BE EQUIPPED WITH CONTROLS TO AUTOMATICALLY REDUCE LIGHTING POWER WHEN SPACE IS TYPICALLY UNOCCUPIED.

130.1(c)1: CONTROL REQUIREMENTS
ALL INSTALLED INDOOR LIGHTING SHALL HAVE ALL OF THE FOLLOWING:
A. CONTROL(S) CAPABLE OF AUTOMATICALLY SHUTTING OFF ALL LIGHTING IN THE SPACE WHEN TYPICALLY UNOCCUPIED (OCCUPANT SENSING CONTROL, AUTOMATIC TIME-SWITCH CONTROL, OR OTHER)
B. SEPARATE CONTROLS FOR LIGHTING ON EACH FLOOR (OTHER THAN STAIRWELLS)
C. SEPARATE CONTROLS FOR A SPACE ENCLOSED BY CEILING HEIGHT PARTITIONS NOT EXCEEDING 5,000 FT2

C. SEPARATE CONTROLS FOR A SPACE ENCLOSED BY CEILING HEIGHT PARTITIONS NOT EXCEEDING 5,000 FT2

D. SEPARATE CONTROLS FOR GENERAL, DISPLAY, ORNAMENTAL, AND DISPLAY CASE LIGHTING

E. AUTOMATIC TIME-SWITCH CONTROLS MAY INCLUDE MANUAL-ON MODE

130.1(c)2: COUNTDOWN TIMER SWITCHES
COUNTDOWN TIMER SWITCHES ONLY ALLOWED TO MEET SHUT-OFF REQUIREMENTS IN CLOSETS <70 FT2 AND SERVER AISLES IN SERVER ROOMS. MAXIMUM TIMER SETTINGS: 10 MINUTES FOR CLOSETS, 30 MINUTES FOR SERVER AISLES

Indoor Lighting Mandatory Measures:

130.1(c)6 PARTIAL OR FULL-OFF OCCUPANT SENSORS
PROVIDE PARTIAL OR FULL-OFF OCCUPANT SENSORS, IN ADDITION TO SHUTOFF CONTROLS PER 130.1(c)1 AND 130.1(c)2, IN THE FOLLOWING SPACES:
- AISLE WAYS AND OPEN AREAS IN WAREHOUSES
- LIBRARY BOOK STACK AISLES
- CORRIDORS AND STAIRWELLS

130.1(f) CONTROL INTERACTIONS
EACH LIGHTING CONTROL INSTALLED TO MEET 130.1 REQUIREMENTS SHALL INCORPORATE THE FUNCTIONS OF OTHER LIGHTING CONTROLS REQUIRED BY THIS SECTION.

1. FOR GENERAL LIGHTING, MANUAL AREA CONTROL SHALL PERMIT THE LEVEL OF LIGHT PROVIDED WHILE LIGHTING IS ON TO BE SET OR ADJUSTED BY CONTROLS SPECIFIED IN 130.1(b), (c), (d) and (e).

2. MANUAL AREA CONTROL SHALL PERMIT SHUTOFF CONTROL TO TURN THE LIGHTING DOWN OR OFF.

3. MULTILEVEL CONTROL SHALL PERMIT THE AUTOMATIC DAYLIGHTING CONTROL TO ADJUST ELECTRIC LIGHTING IN RESPONSE TO DAYLIGHT.

4. MULTILEVEL CONTROL SHALL PERMIT THE DEMAND RESPONSIVE (DR) CONTROL TO ADJUST LIGHTING DURING A DR EVENT THEN RETURN IT TO THE LEVEL SET BY THE CONTROL AFTER THE EVENT.

5 SHUTOFF CONTROL SHALL PERMIT THE MANUAL AREA CONTROL TO TURN THE LIGHTING ON.

6. AUTOMATIC DAYLIGHTING CONTROL SHALL PERMIT MULTILEVEL LIGHTING CONTROL TO ADJUST THE LIGHTING LEVEL.

7. FOR LIGHTING CONTROLLED BY MULTILEVEL LIGHTING CONTROLS AND OCCUPANT SENSING CONTROLS THAT PROVIDE AUTOMATIC-ON FUNCTION, CONTROLS SHALL PROVIDE A PARTIAL-ON FUNCTION THAT IS CAPABLE OF AUTOMATICALLY ACTIVATING BETWEEN 50-70% OF CONTROLLED LIGHTING POWER.

STATE OF CALIFORNIA
Outdoor Lighting
NRCC-LTO-E — CALIFORNIA ENERGY COMMISSION

CERTIFICATE OF COMPLIANCE			NRCC-LTO-E
Project Name:	County of Humboldt Tenant Improvements 2022 6th Street, Eureka	Report Page:	(Page 4 of 7)
Project Address:		Date Prepared:	2022-05-10T18:30:07-04:00

H. OUTDOOR LIGHTING CONTROLS
This table demonstrates compliance with controls requirements for all new or altered luminaires installed as part of the permit application. For alteration projects, luminaires which are existing to remain (ie untouched) and luminaires which are removed and reinstalled (wiring only) do not need to be included in this table even if they are within the spaces covered by the permit application.
*When an option having a * is selected, the notes section of this table must be completed. The lighting controls section of the Compliance Summary Table on the first page will show "DOES NOT COMPLY" if the notes are left blank.*

Mandatory Controls

01	02	03	04	05	
Area Description	Shut-Off §130.2(c)1	Auto-Schedule §130.2(c)2	Motion Sensor §130.2(c)3	Field Inspector	
				Pass	Fail
Outdoor meeting room for County: G	Astronomical Timer	Yes	NA: Wall >=24 ft	☐	☐

** NOTES: Controls with a * require a note in the space below explaining how compliance is achieved.*
EX: Not permitted by health & safety to be turned off: EXCEPTION 1 to §130.2(c)

I. LIGHTING POWER ALLOWANCE (per §140.7)
This table includes areas using allowance calculations per §140.7. General Hardscape Allowance is per Table 140.7-A while "Use it or lose it" Allowances are per Table 140.7-B . Indicate which allowances are being used to expand sections for user input. Luminaires that qualify for one of the "Use it or lose it" allowances shall not qualify for another "Use it or lose it" allowance.

	01				
☐ General Hardscape Allowance Table I (below)	"Use it or lose It" Allowance (select all that apply) (select all that apply)				
	☐ Per Application Table J	☐ Sales Frontage Table K	☐ Ornamental Table L	☒ Per Specific Area Table M	
Calculated General Hardscape Lighting Power Allowances per Table 140.7-A (LZ 0, 1 & 4)					
Calculated General Hardscape Lighting Power Allowance per Table 140.7-A (LZ 2 & 3)					

J. LIGHTING ALLOWANCE: PER APPLICATION
This section does not apply to this project.

K. LIGHTING ALLOWANCE: SALES FRONTAGE
This section does not apply to this project.

Registration Number: | Registration Date/Time: | Registration Provider: Energy Code Ace

STATE OF CALIFORNIA
Outdoor Lighting
NRCC-LTO-E — CALIFORNIA ENERGY COMMISSION

CERTIFICATE OF COMPLIANCE			NRCC-LTO-E
Project Name:	County of Humboldt Tenant Improvements 2022 6th Street, Eureka	Report Page:	(Page 5 of 7)
Project Address:		Date Prepared:	2022-05-10T18:30:07-04:00

L. LIGHTING ALLOWANCE: ORNAMENTAL
This section does not apply to this project.

M. LIGHTING ALLOWANCE: PER SPECIFIC AREA
This table includes areas using the wattage allowance per specific area from Table 140.7-B . More than one specific area allowance may be taken in a single project. If applicable. However, multiple specific area allowances may not be taken for the exact same area on the site.

01	02	03	04	05	06	07	08	09	10
Area Description	Specific Area Type per Table 140.7-B	CALCULATED ALLOWANCE (Watts)			DESIGN WATTS				Additional Allowance (Watts)
		Specific Area (ft^2)[1]	Allowed Density (W/ft^2)	Extra Allowance (Watts)	Luminaire Name or Item Tag	Watts per Luminaire	# of Luminaires	Design Watts	
Outdoor meeting room for County	NonSalesCanopy	400	0.27	108	G	18	13	234	108
							Total Design Watts for this Area:	234	
							Total Allowance (Watts) All Areas:		108

[1] *FOOTNOTES: See Table 140.7-B for rules for calculating the specific areas (ft^2 for these additional lighting allowances.*
[2] *For luminaires indicated in Table F as linear, wattage in column 07 is W/lf instead of Watts/luminaire. Total linear feet should be indicated in column 08 instead of number of luminaires.*

N. EXISTING CONDITIONS POWER ALLOWANCE (alterations only)
This section does not apply to this project.

O. DECLARATION OF REQUIRED CERTIFICATES OF INSTALLATION
Selections have been made based on information provided in this document. If any selection have been changed by permit applicant, an explanation should be included in Table E. Additional Remarks. These documents must be provided to the building inspector during construction and can be found online at https://www.energy.ca.gov/title24/2019standards/2019_compliance_documents/Nonresidential_Documents/NRCI/

Form/Title	Field Inspector	
	Pass	Fail
NRCI-LTO-01-E - Must be submitted for all buildings	☐	☐
NRCI-LTO-02-E- Must be submitted for a lighting control system, or for an Energy Management Control System (EMCS), to be recognized for compliance.	☐	☐

STATE OF CALIFORNIA
Outdoor Lighting
NRCC-LTO-E — CALIFORNIA ENERGY COMMISSION

CERTIFICATE OF COMPLIANCE			NRCC-LTO-E
Project Name:	County of Humboldt Tenant Improvements 2022 6th Street, Eureka	Report Page:	(Page 6 of 7)
Project Address:		Date Prepared:	2022-05-10T18:30:07-04:00

P. DECLARATION OF REQUIRED CERTIFICATES OF ACCEPTANCE
Selections have been made based on information provided in this document. If any selection have been changed by permit applicant, an explanation should be included in Table E. Additional Remarks. These documents must be provided to the building inspector during construction and must be completed through an Acceptance Test Technician Certification Provider (ATTCP). For more information visit: http://www.energy.ca.gov/title24/attcp/providers.html

Form/Title	Systems/Spaces To Be Field Verified	Field Inspector	
		Pass	Fail
NRCA-LTO-02-A - Must be submitted for all outdoor lighting controls except for alterations where controls are added to <= 20 luminaires.	Outdoor meeting room for County: G	☐	☐

Registration Number: | Registration Date/Time: | Registration Provider: Energy Code Ace

STATE OF CALIFORNIA
Outdoor Lighting
NRCC-LTO-E — CALIFORNIA ENERGY COMMISSION

CERTIFICATE OF COMPLIANCE			NRCC-LTO-E
Project Name:	County of Humboldt Tenant Improvements 2022 6th Street, Eureka	Report Page:	(Page 1 of 7)
Project Address:		Date Prepared:	2022-05-10T18:30:07-04:00

A. GENERAL INFORMATION

01	Project Location (city)	Eureka	04	Total Illuminated Hardscape Area (ft^2)	400
02	Climate Zone	1			
03	Outdoor Lighting Zone per Title 24 Part 1 §10.114 or as designated by Authority Having Jurisdiction (AHJ):				
☐	LZ-0: Very Low - Undeveloped Parkland	☐	LZ-2: Moderate - Rural Areas	☐	LZ-4: High - Must be reviewed by CA Energy Commission for Approval
☐	LZ-1: Low - Developed Parkland	☒	LZ-3: Moderately High - Urban Areas		

B. PROJECT SCOPE
This table includes outdoor lighting systems that are within the scope of the permit application and are demonstrating compliance using the prescriptive path outlined in §140.7 or §141.0(b)2L for alterations.

My Project Consists of:

01		02	
☒	New Lighting System	Must Comply with Allowances from §140.7	
☐	Altered Lighting System	Is your alteration increasing the connected lighting load (Watts)?	◯ Yes ◯ No

03	04	05
% of Existing Luminaires Being Altered[1]	Sum Total of Luminaires Being Added or Altered	Calculation Method
☐ < 10% ☐ >= 10% and < 50% ☐ >= 50%		

Please proceed to Table F. Outdoor Lighting Fixture Schedule to define the project's luminaires.

[1] *FOOTNOTES: % of Existing Luminaires Being Altered = (Sum Total of Luminaires Being Added or Altered / Existing Luminaires within the Scope of the Permit Application) x 100.*

STATE OF CALIFORNIA
Outdoor Lighting
NRCC-LTO-E — CALIFORNIA ENERGY COMMISSION

CERTIFICATE OF COMPLIANCE			NRCC-LTO-E
Project Name:	County of Humboldt Tenant Improvements 2022 6th Street, Eureka	Report Page:	(Page 2 of 7)
Project Address:		Date Prepared:	2022-05-10T18:30:07-04:00

C. COMPLIANCE RESULTS
Results in this table are automatically calculated from data input and calculations in Tables F through I. Note: If any cell on this table says "COMPLIES with Exceptional Conditions" refer to Table D. Exceptional Conditions for guidance or see applicable Table referenced below.

Calculations of Total Allowed Lighting Power (Watts) §140.7 or §141.0(b)2L															Compliance Results			
01		02		03		04		05		06		07		08	09
General Hardscape Allowance §140.7(d)1 (See Table I)	+	Per Application §140.7(d)2 (See Table J)	+	Sales Frontage §140.7(d)2 (See Table K)	+	Ornamental §140.7(d)2 (See Table L)	+	Per Specific Area §140.7(d)2 (See Table M)	OR	Existing Power Allowance §141.0(b)2L (See Table N)	=	**Total Allowed** (Watts)	≥	**Total Actual** (Watts)	**07 must be >= 08**
350	+	---	+	---	+	---	+	108	OR	---	=	458	≥	342	COMPLIES
										Cutoff Compliance (See Table G for Details)					N/A
										Controls Compliance (See Table H for Details)					COMPLIES

D. EXCEPTIONAL CONDITIONS
This table is auto-filled with uneditable comments because of selections made or data entered in tables throughout the form.

E. ADDITIONAL REMARKS
This table includes remarks made by the permit applicant to the Authority Having Jurisdiction.

STATE OF CALIFORNIA
Outdoor Lighting
NRCC-LTO-E — CALIFORNIA ENERGY COMMISSION

CERTIFICATE OF COMPLIANCE			NRCC-LTO-E
Project Name:	County of Humboldt Tenant Improvements 2022 6th Street, Eureka	Report Page:	(Page 3 of 7)
Project Address:		Date Prepared:	2022-05-10T18:30:07-04:00

F. OUTDOOR LIGHTING FIXTURE SCHEDULE
For new or altered lighting systems demonstrating compliance with §140.7 all new luminaires being installed and any existing luminaires remaining or being moved within the spaces covered by the permit application are included in the Table below. For altered lighting systems using the Existing Power method per §141.0(b)2L only new luminaires being installed and replacement luminaires being installed as part of the project scope are included (ie, existing luminaires remaining or existing luminaires being moved are not included).

Designed Wattage:

01	02		03	04	05	06	07	08	09	10	
Name or Item Tag	Complete Luminaire Description		Watts per luminaire[1, 2]	How is Wattage determined	Total number luminaires[2]	Luminaire Status[3]	Excluded per §140.7(a)	Design Watts	Cutoff Req. > 6,200 initial lumen output §130.2(b)[4]	Field Inspector	
										Pass	Fail
G	canopy recessed can - outdoor rated	☐ Linear	18	Mfr. Spec	19	New	☐	342	NA: < 6200 lumens	☐	☐
							Total Design Watts:	342			

* NOTES: Selections with a * require a note in the space below explaining how compliance is achieved.
EX: Luminaire is lighting a statue; EXCEPTION 2 to §130.2(b)

[1] *FOOTNOTES: Authority Having Jurisdiction may ask for Luminaire cut sheets to confirm wattage used for compliance per §130.0(c)*
[2] *For linear luminaires, wattage should be indicated as W/lf instead of Watts/luminaire. Total linear feet should be indicated in column 05 instead of number of luminaires.*
[3] *Select "New" for new luminaires in a new outdoor lighting project, or for added luminaires in an alteration. Select "Altered" for replacement luminaires in an alteration. Select "Existing to Remain" for existing luminaires within the project scope that are not being altered and are remaining. Select "Existing Reinstalled" for existing luminaires which are being removed and reinstalled as part of the project scope.*
[4] *Compliance with mandatory cutoff requirements is required for luminaires with initial lumen output >= 6,200 unless exempted by §130.2(b)*

G. CUTOFF REQUIREMENTS (BUG)
This section does not apply to this project.

Registration Number: | Registration Date/Time: | Registration Provider: Energy Code Ace

PROJECT MANAGEMENT
ALAMEIDA ARCHITECTURE
CONSTRUCTION MANAGEMENT
555 S. MAIN STREET, SUITE 2
SEBASTOPOL, CA 95472
(707) 824-1219
WWW.ALAMEIDA.COM

COUNTY OF HUMBOLDT — The Home of the Redwoods

PROJECT

TENANT IMPROVEMENTS FOR ECONOMIC DEVELOPMENT AND CHILD SUPPORT SERVICES

2420 6TH STREET
EUREKA, CA

REGISTERED ARCHITECT — DONALD R. ALAMEIDA — C-19767 — Exp. 11/30/23 — STATE OF CALIFORNIA

No.	Description	Date
1.	PLAN CHECK COMMENTS	12/12/22

TITLE 24 OUTDOOR LIGHTING

Project number	2108
Date	5/8/22
Drawn by	Author
Checked by	Checker

T24-2

Scale

5/2/2023 4:56:22 PM