HUMBOLDT COUNTY ANIMAL SHELTER ACCESSIBILITY IMPROVEMENTS

980 LYCOMING AVE - McKINLEYVILLE, CA 95519

Copyright © 2026

All ideas, designs, arrangements and plans indicated or represented by this drawing are owned by, and the property of, NICHOLS, MELBURG and ROSSETTO and were created, evolved and developed for use on, and in conjunction with, the specified project. None of such ideas, designs, arrangements and plans shall be used by or disclosed to any person, firm or corporation for any purpose whatsoever without the written permission of NICHOLS, MELBURG and ROSSETTO.

NICHOLS MELBURG & ROSSETTO
ARCHITECTS + ENGINEERS
300 KNOLLCREST DRIVE
REDDING, CA. 96002
(530) 222-3300 (530) 222-3538 FAX
http://www.nmrdesign.com

CONSULTANTS

PROJECT TEAM

CLIENT

HUMBOLDT COUNTY
Travis Smith
CAO Project Manager
825 5th Street, Rm 112, Eureka, CA 95501
Cell 707-407-7932
TSmith@co.humboldt.ca.us

ARCHITECT

NICHOLS, MELBURG & ROSSETTO
Kurt A. Jorgensen, AIA
555 Main St. Suite 300, Chico, CA 95928
(530) 891-1710
Cell (530) 588-3881
jorgensen@nmrdesign.com

MECHANICAL & ELECTRICAL

FRONTIER CONSULTING ENGINEERING
Jason Adams
P.O. Box 492174, Redding, CA 96049
(530) 232-6160
jason@frontierce.com

VICINITY MAP

SHEET INDEX

SHT. #	DESCRIPTION	SC.
ARCHITECTURAL DRAWINGS		
G000	COVER SHEET	NONE
G001	ABBREV./GEN'L REQS, SPECS/MAT'LS & RESPONS MATRIX	NONE
G010	CAL-GREEN NON-RESIDENTIAL MANDATORY MEASURES	NONE
G011	CAL-GREEN NON-RESIDENTIAL MANDATORY MEASURES	NONE
G012	CAL-GREEN NON-RESIDENTIAL MANDATORY MEASURES	NONE
G200	EXTERIOR ACCESSIBILITY DETAILS	AS NOTED
G201	INTERIOR ACCESSIBILITY DETAILS	AS NOTED
A050	EROSION & SEDIMENTATION CONTROL	AS NOTED
A100	DEMOLITION SITE PLAN	1/16" = 1'-0"
A101	NEW SITE PLAN	1/16" = 1'-0"
A200	OVERALL FLOOR PLAN	1/8" = 1'-0"
A210	ENLARGED DEMOLITION FLOOR PLAN - AREA 'A'	1/4" = 1'-0"
A211	ENLARGED DEMOLITION FLOOR PLAN - AREA 'B'	1/4" = 1'-0"
A220	ENLARGED NEW FLOOR PLAN - AREA 'A'	1/4" = 1'-0"
A221	ENLARGED NEW FLOOR PLAN - AREA 'B'	1/4" = 1'-0"
A240	OVERALL ROOF PLAN	1/8" = 1'-0"
A241	ENLARGED ROOF PLAN	1/4" = 1'-0"
A700	FINISHES & ACCESSORIES SCHEDULE	AS NOTED
A710	DOOR SCHEDULE	AS NOTED
A900	INTERIOR DETAILS	AS NOTED
A940	CASEWORK	AS NOTED
A960	SIGNAGE	AS NOTED
MECHANICAL DRAWINGS		
M100	MECHANICAL LEGENDS & SCHEDULES	AS NOTED
M110	MECHANICAL DEMOLITION FLOOR PLAN	1/8" = 1'-0"
M140	MECHANICAL DEMOLITION ROOF PLAN	1/8"= 1'-0"
M210	MECHANICAL FLOOR PLAN	1/8"= 1'-0"
M240	MECHANICAL ROOF PLAN	1/4"= 1'-0"
M300	PRESCRIPTIVE T24 CALCULATIONS	AS NOTED
PLUMBING DRAWINGS		
P100	PLUMBING LEGENDS & SCHEDULES	AS NOTED
P210	PLUMBING FLOOR PLAN	1/8"= 1'-0"
P240	PLUMBING ROOF PLAN	1/8"= 1'-0"
ELECTRICAL DRAWINGS		
E100	ELECTRICAL LEGENDS & SCHEDULES	AS NOTED
E200	ELECTRICAL SITE PLAN	1/8" = 1'-0"
E201	ELECTRICAL SITE PHOTOMETRICS PLAN	AS NOTED
E240	ELECTRICAL ROOF PLAN	1/4" = 1'-0"
E400	ELECTRICAL T24 CALCULATIONS	N/A

APPLICABLE CODES

JURISDICTION: HUMBOLDT COUNTY, CA

ALL WORK PERFORMED AND PRODUCTS FURNISHED SHALL COMPLY WITH THE FOLLOWING CODES ADOPTED BY THE COUNTY OF HUMBOLDT:

2025 CA BUILDING CODE
2022 CA ELECTRICAL CODE
2022 CA ENERGY CODE
2022 CA EXISTING BUILDING CODE
2022 FIRE CODE
2022 CA MECHANICAL CODE
2022 CA PLUMBING CODE

THIS PROJECT IS NOT LOCATED IN ANY FIRE HAZARD SEVERITY ZONE WITHIN A STATE RESPONSIBILITY AREA, OR IN A WILDLAND-URBAN INTERFACE FIRE AREA; IT IS WITHIN THE CITY OF McKINLEYVILLE FIRE DEPT'S JURISDICTION.

GENERAL INFO

PROJECT DESCRIPTION:

THIS PROJECT IS LOCATED IN HUMBOLDT COUNTY, IN THE CITY OF McKINLEYVILLE. IT CONSISTS OF SITE, EXTERIOR AND INTERIOR ACCESSIBILITY IMPROVEMENTS, ROOF REPLACEMENT, ALONG WITH MISC. SITE DEMOLITION

SITE:

STREET ADDRESS	980 LYCOMING AVE
TAX/PARCEL NO.	511-351-009
COUNTY	HUMBOLDT
ZONING	PUBLIC FACILITY
PARKING	24 SPACES - NO CHANGE
ACREAGE	NOT KNOWN
USE/USE CODE	PUBLIC LAND, SCHOOLS, NON TAXABLE ENTITIES; 8000
COASTAL ZONE	YES

BUILDING:

BUILDING AREA	12,024 SF
STORIES	ONE
CONSTRUCTION TYPE	V - B, NON-SPRINKLERED
OCCUPANCY CLASSIFICATION	GROUP 'B'

SCOPE:

ACCESSIBILITY IMPROVEMENTS TO THE SITE & BUILDING
- PATH OF TRAVEL
- PARKING STALLS
- MAIN ENTRY
- RESTROOMS/ PLUMBING
- DOORS & DOOR HARDWARE
- SINGAGE
- DRINKING FOUNTAIN
- TRANSACTION COUNTER
- CASEWORK & SINK

REPLACE EXISTING ROOFTOP HVAC UNITS

REPLACE ROOFING AT HVAC ROOF WELL

REPLACE PARKING LIGHT POLES

APPROVAL STAMPS

LICENSE STAMPS

LICENSED ARCHITECT
DIETER CARTER
C 34730
REN. 5/31/27
STATE OF CALIFORNIA

PROJECT NAME

RENOVATION FOR

Humboldt County Animal Shelter

980 Lycoming Ave
McKinleyville, CA 95519

SHEET TITLE

COVER

DRAWING STATUS

CONSTRUCTION DOCUMENTS

BLDG. DEPT. SUBMITTAL

REVISIONS

Sym.	Description	Date
1	CASP	2026-04

Drawn By	KAJ
Date Issued	04-03-2026
Scale	N/A
Project No.	17-6430

SHEET No.

G000

Login Name: TimG
Plot Date: April 01, 2026 - 4:11 pm
File Name: K:\Projects\6000\Cad\2017\17-6430 Humboldt County ADA Compliance\5 Animal Shelter\10 DWGs\17-6430-15-G000_AS-CVR.dwg
Plotted to 1=1

ABBREVIATIONS

⊥	PERPENDICULAR
∠	ANGLE
#	NUMBER/POUNDS
&	AND
@	AT
℄	CENTERLINE
Ø	DIAMETER OR ROUND
PL	PROPERTY LINE
[	CHANNEL
	SQUARE FEET
A.	AIR (MEDICAL)
ABV.	ABOVE
A.B.	ANCHOR BOLT
A.C.P.	ASPHALTIC CONCRETE PAVING
A.D.	AREA DRAIN
A.P.	ACCESS PANEL
A/C	AIR CONDITIONING
ABBR.	ABBREVIATION
ACP	ACOUSTIC CEILING PANEL
ACT	ACOUSTIC TILE
ACOUS.	ACOUSTICAL
ADHV.	ADHESIVE
ADJ.	ADJUSTABLE
AFD	AUTOMATIC FIRE DAMPER
AESS	ARCHITECTURAL EXPOSED STRUCTURAL STEEL
AFF	ABOVE FINISH FLOOR
AGG	AGGREGATE
ALT.	ALTERNATE
ALUM.	ALUMINUM
ANOD.	ANODIZED
APPROX.	APPROXIMATELY
ARCH.	ARCHITECTURAL
ASSY.	ASSEMBLY
AUTO.	AUTOMATIC
B.	BATH
B.W.	BOTH WAYS
BD.	BOARD
BHMS	BUGLE HEAD METAL SCREW
BITUM.	BITUMINOUS
BLDG.	BUILDING
BLK.	BLOCK
BLKG.	BLOCKING
BM.	BEAM
BOT.	BOTTOM
BOW.	BACK OF WALK
BR.	BEDROOM
BTWN.	BETWEEN
BUR.	BUILT-UP ROOFING
CA.	COMPRESSED AIR
C.B.	CATCH BASIN / CODE BLUE
C.BD.	CHALK BOARD
C.C.T.	CUBICLE CURTAIN TRACK
C.C.U.	CRITICAL CARE UNIT
C.F.C.I.	CONTRACTOR FURNISHED CONTRACTOR INSTALLED
C.G.	CORNER GUARD
C.H.	CLOTHES HOOK
C.I.	CAST IRON
C.J.	CONTROL JOINT/ CONSTRUCTION JOINT
℄	CENTER LINE
C.O.	CASED OPENING/ CONDUIT ONLY/CLEANOUT
C.S.	CUP SINK
CW.	COLD WATER
CAB.	CABINET
CEM.	CEMENT
CER.	CERAMIC
CHAN.	CHANNEL
CHW	CHILLED WATER
CLG.	CEILING
CLKG.	CAULKING
CLOS.	CLOSET
CLR.	CLEAR
CMU.	CONCRETE MASONRY UNIT
CND.	CONDUCTIVE
CNTR.	COUNTER
COL.	COLUMN
COMPO.	COMPOSITION
CONC.	CONCRETE
COND.	CONDITION
CONF.	CONFERENCE
CONN.	CONNECTION
CONST.	CONSTRUCTION
CONT.	CONTINUOUS
CONTR.	CONTRACTOR
CORR.	CORRIDOR/CORRUGATED
CO_2	CARBON DIOXIDE
CPT.	CARPET
CTR.	CENTER
CTSK.	COUNTERSUNK

D.	DEEP
D.A.	DOUBLE ACTING
D.C.W.	DOMESTIC COLD WATER
D.H.W.	DOMESTIC HOT WATER
D.F.	DRINKING FOUNTAIN/ DOUGLAS FIR
D.O.	DOOR OPENING
D.RM.	DINING ROOM
D.S.	DOWNSPOUT
D.S.P.	DRY STAND PIPE
D.W.	DUMBWAITER
D/W	DISHWASHER
DBL.	DOUBLE
DEPT.	DEPARTMENT
DET.	DETAIL
DIW.	DEIONIZED WATER
DSA.	DIVISION OF THE STATE ARCHITECT
DIA.	DIAMETER
DIAG.	DIAGONAL
DIFF.	DIFFUSER
DIM.	DIMENSION
DISP.	DISPOSAL
DN.	DOWN
DR.	DOOR
DWG.	DRAWING
DRW.	DRAWER
(E)	EXISTING
E.	EAST
EWC.	ELECTRIC WATER COOLER
E.J.	EXPANSION JOINT
E.K.G.	ELECTROCARDIOGRAM
E.P.	ELECTRICAL PANEL
E.W.	EACH WAY
EA.	EACH
E.A.	EXHAUST AIR
EEG.	ELECTROENCEPHALOGRAPH
EL.	ELEVATION
ELEC.	ELECTRICAL
ELEV.	ELEVATOR
EMER.	EMERGENCY
EMG.	ELECTROMYOGRAPHY
ENCL.	ENCLOSURE
ENG.	ELECTRONYSTAGMOGRAPHY
EENT.	EAR,EYE,NOSE,THROAT
EP.	EVOKED POTENTIALS
EQ.	EQUAL
EQPT.	EQUIPMENT
ETO.	ETHYLENE OXIDE
EVAC.	GAS EVACUATION
EVS.	ENVIRONMENTAL SERVICES
EXAM.	EXAMINATION
EXH.	EXHAUST
EXP.	EXPANSION
EXPO.	EXPOSED
EXST'G	EXISTING
EXT.	EXTERIOR
F.	FIXED
F.A.	FIRE ALARM
F.B.	FLAT BAR
F.C.O.	FLOOR CLEAN OUT
F.D.	FLOOR DRAIN/FIRE DAMPER
F.E.	FIRE EXTINGUISHER
F.E.C.	FIRE EXTINGUISHER CABINET
F.F.	FINISH FLOOR
F.G.	FINISH GRADE
F.H.&E.C.	FIRE HOSE & EXTINGUISHER CABINET
F.H.C.	FIRE HOSE CABINET
F.H.W.S.	FLAT HEAD WOOD SCREW
F.L.	FLOW LINE
F.S.	FLOOR SINK
F/F	FACE TO FACE
FDN.	FOUNDATION
FIN.	FINISH
FIXT.	FIXTURE
FLASG.	FLASHING
FLR.	FLOOR
FLUOR.	FLUORESCENT
F.O.	FINISH OPENING
FOC.	FACE OF CONCRETE
FOF.	FACE OF FINISH
FOM.	FACE OF MASONRY
FOS.	FACE OF STUD
FPRF.	FIREPROOF
FS.	FLAME SPREAD
FT.	FOOT OR FEET
FTG.	FOOTING
FURN.	FURNISH(ED)
FURR.	FURRING
FUT.	FUTURE
F.V.	FIELD VERIFY

G.	GAS (FUEL)
G.B.	GRAB BAR
G.F.I.	GROUND FAULT INTERRUPTER
G.I.	GALVANIZED IRON
G.L.B.	GLU-LAM BEAM
GA.	GAUGE
GALV.	GALVANIZED
GEN.	GENERAL
GL.	GLASS
GND.	GROUND
GR.	GRADE
GYP.	GYPSUM
GYP.BD.	GYPSUM BOARD
GFRC.	GLASS FIBER REINFORCED CONCRETE
H.	HIGH
H.B.	HOSE BIBB
H.C.	HOLLOW CORE
He	HELIUM
H.M.	HOLLOW METAL
H.P.	HIGH POINT
HDCP.	HANDICAPPED
HD.	HARD
HDWD.	HARDWOOD
HDWR.	HARDWARE
HGT.	HEIGHT
HORIZ.	HORIZONTAL
HPA	HIGH PURITY AIR
HR.	HOUR
H.S.S.	HOLLOW STRUCTURAL SECTION
HVAC.	HEATING VENTILATING & AIR CONDITIONING
HW	HOT WATER
IBC	INTERNATIONAL BUILDING CODE
IDF	INTERMEDIATE DISTRIBUTION FRAME
I.C.U.	INTENSIVE CARE UNIT
I.D.	INSIDE DIAMETER (DIMENSION)
I.V.T.	INTRAVENOUS TRACK
IN.	INCH
INSUL.	INSULATION
INT.	INTERIOR
INV.	INVERT
IMP.	IMPRINTER
ICBO.	INTERNATIONAL CONFERENCE OF BUILDING OFFICIALS
JAN.	JANITOR
JST.	JOIST
JT.	JOINT
KIT.	KITCHEN
L.	LENGTH
L.H.	LEFT HAND
L.P.	LOW POINT
LAB.	LABORATORY
LAM.	LAMINATE
LAND.	LANDSCAPED
LAV.	LAVATORY
LBS.	POUNDS
LGT.	LIGHT
LIN.	LINEN
LKR.	LOCKER
LN_2	LIQUID NITROGEN
LUM.	LUMINOUS
LVT	LUXURY VINYL TILE
M.A.	MEDICAL AIR
M.B.	MACHINE BOLT
MDF	MAIN DISTRIBUTION FRAME
MGA	MEDICAL GAS ALARM BOX
M.C.	MEDICINE CABINET
M.H.	MANHOLE
M.L.	METAL LATH
M.O.	MASONRY OPENING
MACH.	MACHINE
MAINT.	MAINTENANCE
MAS.	MASONRY
MAX.	MAXIMUM
MECH.	MECHANICAL
MEMB.	MEMBRANE
MET.	METAL
MTL.	METAL
MEZZ.	MEZZANINE
MFGR.	MANUFACTURER
MFR.	MANUFACTURER
MIN.	MINIMUM/ MINUTE
MIR.	MIRROR
MISC.	MISCELLANEOUS
MON.	MONITOR
MOS.	MOSAIC
MSL.	MEAN SEA LEVEL
MTD.	MOUNTED
MATL.	MATERIAL
MUL.	MULLION

N.	NORTH/ NITROGEN
NC.	NURSE CALL
N.G.	NATURAL GAS
N.I.C.	NOT IN CONTRACT
N.I.G.C.	NOT IN GENERAL CONTRACT
N.T.S.	NOT TO SCALE
NAT.	NATURAL
NO.	NUMBER
NOM.	NOMINAL
N_2O	NITROUS OXIDE
O.	OWNER
O.A.	OVERALL
O.C.	ON CENTER
O.D.	OUTSIDE DIAMETER (DIMENSION)
O.F.C.I.	OWNER FURNISHED/ CONTRACTOR INSTALLED
O.F.D.	OVERFLOW DRAIN
O.F.O.I.	OWNER FURNISHED/ OWNER INSTALLED
O.R.	OPERATING ROOM
OSHPD.	OFFICE OF STATEWIDE HEALTH PLANNING AND DEVELOPMENT
O/	OVER
OBS.	OBSCURE
OFF.	OFFICE
OPNG.	OPENING
OPP.	OPPOSITE
O_2	OXYGEN
P.	PANTRY
P.LAM.	PLASTIC LAMINATE
P.C.	PRECAST CONCRETE
P.D.	PHYSICALLY DISABLED
P.I.P.	PROTECT-IN-PLACE
P.O.C.	POINT OF CONNECTION
P.T.D.	PAPER TOWEL DISPENSER
P.T.D.& R.	COMBINATION PAPER TOWEL DISPENSER & RECEPTACLE
P.T.R.	PAPER TOWEL RECEPTACLE
P.T.S.	PNEUMATIC TUBE SYSTEM
P.W.	PASS WINDOW
PART.	PARTITION
PASS.	PASSENGER
PERF.	PERFORATED
PERIM.	PERIMETER
PL.	PLATE
PLAS.	PLASTER
PLBG.	PLUMBING
PLYWD.	PLYWOOD
PNT	PAINT(ED)
POL.	POLISHED
PR.	PAIR
PROJ.	PROJECTION/PROJECT
PT.	POINT/PAINT
PVC.	POLY-VINYL CHLORIDE
Q.T.	QUARRY TILE
R.	RISER
R.A.	RETURN AIR
RAD.	RADIUS
R.D.	ROOF DRAIN
R.D.L.	ROOF DRAIN LEADER
R.H.	RIGHT HAND
R.H.M.	ROUND HEAD METAL SCREW
R.H.W.S.	ROUND HEAD WOOD SCREW
RECEPT.	RECEPTION/IST
RECPT.	RECEPTACLE
RECT.	RECTANGULAR
REF.	REFERENCE
REFR/ REFRIG.	REFRIGERATOR
REG.	REGISTER
REINF.	REINFORCEMENT
REQD.	REQUIRED
RESIL.	RESILIENT
RET.	RETAIN(ING)/RETURN
REV.	REVERSE
RM.	ROOM
RMS.	ROOMS
R.O.	ROUGH OPENING
ROW.	REVERSE OSMOSIS WATER
R.O.W.	RIGHT OF WAY
RR#	LOS ANGELES CITY RESEARCH REPORT NUMBER
R.V.B.	RECESSED VALVE BOX
RWD.	REDWOOD
RWL.	RAINWATER LEADER
S.	SOUTH/SINK/STEAM/SLIDE (VACUUM BOTTLE)
S.A.	SUPPLY AIR, OR SELF-ADHERED
S.A.M.	SELF-ADHERED MEMBRANE
SAF	SELF-ADHERED FLASHING
S.C.	SOLID CORE

S.C.D.	SEAT COVER DISPENSER
S.D.	SUBDRAIN/ SOAP DISPENSER
S.L.	SCORE LINE
S.N.R.	SANITARY NAPKIN RECEPTACLE
S.N.V	SANITARY NAPKIN VENDOR
S.S.	STAINLESS STEEL
S.SK.	SERVICE SINK
SCHED.	SCHEDULE
SEC.	SECURITY
SEC'Y	SECRETARY
SECT.	SECTION
SFM.	STATE FIRE MARSHAL
SHT.	SHEET
SHTG.	SHEATHING
SHWR.	SHOWER
SH.	SHELF
SIM.	SIMILAR
SL.	SLOPE
SPEC.	SPECIFICATIONS
SQ.	SQUARE
ST.	STEAM
STA.	STATION
STD.	STANDARD
STER.	STERILIZER
STL.	STEEL
STOR.	STORAGE
STRUCT.	STRUCTURAL
SUSP.	SUSPENDED
SYM.	SYMMETRICAL
SMS.	SHEET METAL SCREW
T.&G.	TONGUE AND GROOVE
T.BD.	TACKBOARD
T.B.	TOWEL BAR
T.C.	TOP OF CURB
T.CL.	TIME CLOCK
T.D.	TOP OF DECK
T.P.D.	TOILET PAPER DISPENSER
T.PL.	TOP OF PLATE
TEL.	TELEPHONE
TEMP.	TEMPERED
TERR.	TERRAZZO
THK.	THICK
TOC.	TOP OF CONCRETE
TOIL.	TOILET
TOP.	TOP OF PAVEMENT/PARAPET
TOP.	TOP OF PLATE
TOS.	TOP OF SLAB
TR.	TREATMENT
TRANS.	TRANSFORMER
TW.	TOP OF WALL
TYP.	TYPICAL
TV.	TELEVISION
T.	TREAD/TOP
U.	UNDER
U.G.	UNDERGROUND
U.L.	UNDERWRITER'S LABORATORY
U.O.N.	UNLESS OTHERWISE NOTED
U/C	UNDERCOUNTER
UNF.	UNFINISHED
UR.	URINAL
V.C.	VALUE CABINET
V.C.T.	VINYL COMPOSITION TILE
V.T.R.	VENT THROUGH ROOF
V.W.C.	VINYL WALL COVERING
V	VACUUM
VEND.	VENDING
VENT.	VENTILATED/ VENTILATING
VERT.	VERTICAL
VEST.	VESTIBULE
W.	WEST/WIDE/WIDTH/WASTE/WALL
W/O	WITHOUT
W.C.	WATER CLOSET
W.H.	WATER HEATER
WHI	WARNOCK HERSEY INTERNATIONAL INC. CLASSIFICATION
W.I.	WROUGHT IRON
W.I.C.	WOODWORK INSTITUTE OF CALIFORNIA
W.R.	WATER RESISTANT/ WASTE RECEPT.
W.S.	WOOD SCREW
W.S.P.	WET STANDPIPE
W.W.F.	WELDED WIRE FABRIC
W.W.M.	WOVEN WIRE MESH
W/	WITH
W/C	WHEELCHAIR
W/C.L.	WHEELCHAIR LAV
WD.	WOOD
WG.	WIRE GUARD/WIRE GLASS
WGT.	WEIGHT
WP.	WATERPROOF
WSCT.	WAINSCOT
WP#	GYPSUM ASSOCCIATION WALL PARTITION ASSEMBELY NUMBER
XFMR.	TRANSFORMER

SYMBOLS

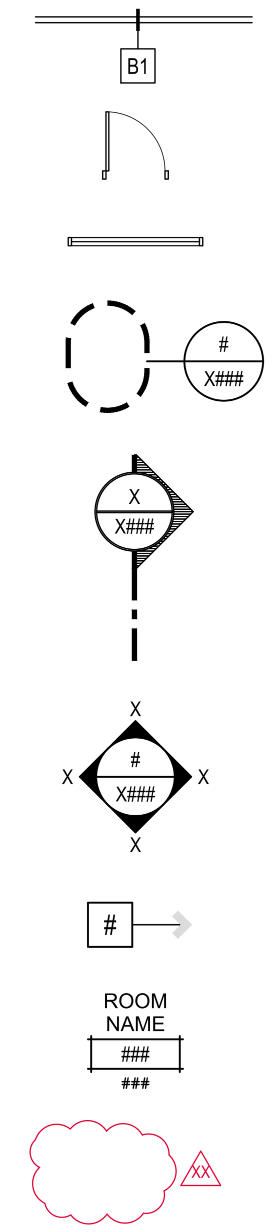

WALL ASSEMBLY TAG - SEE SHEET A701 FOR MORE INFORMATION

DOOR - SEE SCHEDULE, SHEET A701

WINDOW

DETAIL CALL OUT

DETAIL NUMBER
SHEET NUMBER WHERE DETAIL IS SHOWN

SECTION CALL OUT

SECTION DESIGNATION
SHEET NUMBER WHERE SECTION IS SHOWN

SHADED "ARROW" INDICATES DIRECTION OF SECTION

INTERIOR ELEVATION TAG

ROOM NUMBER ELEVATIONS ON SHEET
SHEET NUMBER WHERE ELEVATIONS ARE SHOWN

LETTERS INDICATE DIRECTION OF ELEVATION ON PLAN

KEYNOTE NUMBER PER SHEET

ROOM TAG

ROOM NAME
ROOM NUMBER
ROOM SIZE

REVISED AREA WITH REVISION NUMBER

GENERAL NOTES

1. THE GENERAL CONTRACTOR SHALL BE HELD LIABLE FOR ANY WORK OR MATERIALS DAMAGED BY ANY TRADE. THE GENERAL CONTRACTOR SHALL BE RESPONSIBLE FOR REPLACEMENT OR REPAIRS OF ANY DAMAGED WORK OR MATERIALS.
2. ALL DIMENSIONS SHALL TAKE PRECEDENCE OVER SCALE SHOWN ON PLANS, SECTIONS AND DETAILS. DIMENSIONS MISSING FROM THE PLANS, OR NEEDED FOR EXECUTION OF WORK, SHALL BE PROVIDED OR CLARIFIED BY THE ARCHITECT BEFORE THE WORK IS INSTALLED. FAILURE TO COMPLY WITH THIS NOTE SHALL BE CORRECTED BY, AND AT THE SOLE EXPENSE OF, THE CONTRACTOR. DO NOT SCALE DRAWINGS. DIMENSIONS NOTED AS "CLEAR" (CLR) ARE TAKEN TO THE FACE OF FINISH MATERIALS. THE CONTRACTOR SHALL VERIFY DIMENSIONS OF PREFABRICATED AND MANUFACTURED ITEMS AND COORDINATE ROUGH OPENINGS ACCORDINGLY.
   A. ALL DIMENSIONS ARE TO FACE OF STUD, CENTERLINE OF COLUMNS, FACE OF CONCRETE OR BLOCK WALLS, UNLESS OTHERWISE NOTED.
   B. FINISH FLOOR DIMENSIONS ARE TO TOP OF CONCRETE OR OTHER HARD SURFACE MATERIAL, UNLESS OTHERWISE NOTED.
   C. CEILING HEIGHT DIMENSIONS ARE TO FINISH SURFACES.
   D. CEILING SOFFIT DIMENSIONS ARE FROM FINISHED WALL SURFACE TO FINISHED WALL SURFACE.
3. ALL DISSIMILAR METALS SHALL BE EFFECTIVELY ISOLATED FROM EACH OTHER TO PREVENT DIELECTRIC ACTION.
4. REQUIRED MEANS OF EGRESS SHALL BE MAINTAINED DURING CONSTRUCTION AND DEMOLITION PER CFC CH.33.
5. THE CONTRACTOR SHALL KEEP ALL EXITS READILY ACCESSIBLE AND UNOBSTRUCTED AT ALL TIMES.
6. WHEN A DETAIL IS IDENTIFIED AS TYPICAL, THE REFERENCE IS INFERRED TO BE REPEATED IN EVERY INSTANCE.
7. WHEN INSTALLING DRILLED-IN ANCHORS AND/OR POWDER DRIVEN PINS IN NON-PRESTRESSED REINFORCEMENT CONCRETE, USE CARE AND CAUTION TO AVOID CUTTING OR DAMAGING THE EXISTING REINFORCING BARS. WHEN INSTALLING THEM INTO EXISTING PRE-STRESSED CONCRETE (PRE- OR POST- TENSIONED) LOCATE THE PRE-STRESSED TENDONS BY NON-DESTRUCTIVE METHOD PRIOR TO INSTALLATION. MAINTAIN A MINIMUM CLEARANCE OF ONE INCH BETWEEN REINFORCEMENT AND THE DRILLED-IN ANCHOR AND/OR PIN.

SAFETY DURING CONSTRUCTION

THE FOLLOWING REQUIREMENTS MAY BE FOUND IN CFC CH. 33, AND OTHER PARTS OF THE CFC AS REFERENCED.

1. FIRE DEPARTMENT ACCESS ROADS SHALL BE ESTABLISHED AND MAINTAINED.
2. WATER MAINS AND HYDRANTS SHALL BE OPERATIONAL DURING CONSTRUCTION.
3. FIRE EXTINGUISHERS SHALL BE PROVIDED FOR BUILDINGS UNDER CONSTRUCTION AS REQUIRED BY THE LOCAL FIRE AUTHORITY. CONTRACTOR SHALL MAINTAIN THEM DURING THE COURSE OF CONSTRUCTION. EACH EXTINGUISHER SHALL BE 10LB. CAPACITY, CAPABLE OF EXTINGUISHING CLASS A, CLASS B, AND CLASS C FIRES. ALL EXTINGUISHERS SHALL BE U.L. LABELED, AND SHALL BE DRY CHEMICAL TYPE. EXTINGUISHERS SHALL BE LOCATED AT APPROXIMATELY 150' INTERVALS AS APPROVED BY THE FIRE INSPECTOR.
4. COMBUSTIBLE DEBRIS SHALL NOT BE ALLOWED TO ACCUMULATE WITHIN THE BUILDING.
5. ACCESS TO BUILDINGS FOR THE PURPOSE FOR FIRE FIGHTING SHALL BE PROVIDED. CONSTRUCTION MATERIAL SHALL NOT BLOCK ACCESS TO BUILDINGS, HYDRANTS OR FIRE APPLIANCES.
6. CUTTING AND WELDING OPERATIONS SHALL BE IN ACCORDANCE WITH THE GENERAL SAFETY RULES OF THE CFC CH. 35.
7. WHEN TEMPORARY CONSTRUCTION BARRIERS ARE NECESSARY, TEMPORARY EXITING SHALL BE APPROVED BY THE LOCAL FIRE AUTHORITY.
8. PLASTIC FILM WHEN USED FOR DUST PROTECTION, SHALL BE FLAME RESISTANT.
9. SAFETY PRECAUTIONS INCLUDING FIRE DEPARTMENT ACCESS, WATER SUPPLY, NUMBER AND LOCATION OF HYDRANTS AND FIRE APPLIANCES SHALL BE APPROVED BY THE LOCAL FIRE AUTHORITY, CFC CH. 5.

LIFE PROTECTION - LIFE SAFETY

1. ALL FIRE RESISTIVE ASSEMBLIES FOR PROTECTION OF OPENINGS SHALL BE PROVIDED AND INSTALLED IN ACCORDANCE WITH CHAPTERS 3 AND 7 OF THE CALIFORNIA BUILDING CODE
2. ALL VOIDS AND PENETRATIONS IN RATED WALLS INCLUDING MECHANICAL DUCTS, ETC., SHALL BE RATED AS REQUIRED BY CODE.
3. PROVIDE FIRE EXTINGUISHERS AND CABINETS AND PORTABLE FIRE EXTINGUISHERS WITHIN 75 FEET TRAVEL DISTANCE TO ALL PORTIONS OF THE BUILDING ON EACH FLOOR AND AT ALL MECHANICAL AND ELECTRICAL ROOMS AND AS DIRECTED BY THE FIRE MARSHALL.

5. ALL WALLS THAT REQUIRE PROTECTED OPENINGS SHALL HAVE 5/8" THICK TYPE "X" GYPSUM BOARD ON BOTH SIDES U.O.N., CONTINUOUS FROM RATED FLOOR ASSEMBLY TO RATED CEILING OR DECK ASSEMBLY.
6. FIVE (5) SIDE ALL RECESSED BOXES WITH GYPSUM BOARD OF THE THICKNESS AND TYPE PROVIDED BY THE WALL SYSTEM WHEN THEY ARE INSTALLED INTO A FIRE RATED WALLS AND CEILINGS. EXCEPTION: BOXES NOT MORE THAN 16 SQ. IN. IN SURFACE AREA FOR A SUM TOTAL OF NOT MORE THAN 100 SQ. IN. IN ANY 100 SQ. FT. OF WALL SURFACE NEED NOT BE BOXED IN.
7. AT WALLS INDICATED AS ONE-HOUR CONSTRUCTION, MAINTAIN ONE-HOUR FIRE RESISTIVE WALL CONSTRUCTION AT BUILT-IN FIXTURES SUCH AS FIRE EXTINGUISHERS, ELECTRICAL, AND MECHANICAL ITEMS EXCEEDING 16 SQUARE INCHES IN AREA
8. PENETRATIONS INTO OR THROUGH WALLS REQUIRED TO HAVE A FIRE-RESISTANCE RATING AND WALLS REQUIRING PROTECTED OPENINGS MUST BE PROTECTED BY A LISTED FIRESTOP SYSTEM PER CBC SECTION 714.
9. PROVIDE COMBINATION SMOKE / FIRE DAMPERS FOR ALL APPROVED DUCT PENETRATIONS THROUGH ALL FIRE RATED WALLS, FIRE RESISTIVE ELEMENTS AND ALL SHAFT PENETRATIONS. DUCTS PENETRATING THROUGH ELEMENTS OF FIRE RATED CORRIDOR WALLS SHALL BE EQUIPPED WITH COMBINATION SMOKE AND FIRE DAMPERS (EXCEPT STEEL DUCTS WITH MINIMUM .019" THICKNESS DO NOT REQUIRE DAMPERS WHEN THE DUCT HAS NO OPENINGS INTO THE EXIT CORRIDOR PER CBC SECTION 717).

11. FIRE AND DRAFT STOPS SHALL BE INSTALLED PER CBC REQUIREMENTS.
12. EXIT SIGNS MUST BE INTERNALLY ILLUMINATED. THE WORD 'EXIT' SHALL BE LETTERED IN GREEN ON A WHITE OR OPAQUE BACKGROUND. PROVIDE TWO SEPARATE CIRCUITS FOR EXIT SIGNS CONFORMING TO CODE SECTIONS AS FOLLOWS: CFC SECTION 1013 AND CBC SECTION 1013.

Copyright © 2025

All ideas, designs, arrangements and plans indicated or represented by this drawing are owned by, and the property of, NICHOLS, MELBURG and ROSSETTO and were created, evolved and developed for use on, and in conjunction with, the specified project. None of such ideas, designs, arrangements or plans shall be used by, or disclosed to any person, firm or corporation for any purpose whatsoever without the written permission of NICHOLS, MELBURG and ROSSETTO.

NICHOLS MELBURG & ROSSETTO
ARCHITECTS + ENGINEERS
300 KNOLLCREST DRIVE
REDDING, CA. 96002
(530) 222-3300 (530) 222-3538 FAX
http://www.nmrdesign.com

CONSULTANTS

LICENSE STAMPS

LICENSED ARCHITECT
DEVEN CARTER
C 34730
REN. 5/31/27
STATE OF CALIFORNIA

PROJECT NAME

RENOVATION FOR

Humboldt County Animal Shelter

980 Lycoming Ave
McKinleyville, CA 95519

SHEET TITLE

ABBREVIATIONS, SYMBOLS, SAFETY, GEN'L NOTES & LIFE SAFETY

DRAWING STATUS

CONSTRUCTION DOCUMENTS

BLDG. DEPT. SUBMITTAL

REVISIONS

Sym.	Description	Date

Drawn By	KAJ
Date Issued	04-03-2026
Scale	NTS
Project No.	17-6430

SHEET No.

G001

Login Name: Kurt_J
Plot Date: October 20, 2025 - 3:46 pm
File Name: S:\Projects\5000.COM\2025\25-5953 BBD Grand Prairie TI\7.0 Consult\7.0 Shell Arch\Drawing1.dwg
XREFS: x-AS-tit

2022 CALIFORNIA GREEN BUILDING STANDARDS CODE NONRESIDENTIAL MANDATORY MEASURES

GREEN BUILDING NOTES

- PROVIDED BY GENERAL CONTRACTOR, U.O.N
- SEE CA GREEN BUILDING CODE (GBC) FOR FULL REQUIREMENTS

A. CONSTRUCTION WASTE REDUCTION

1. CA GBC 5.408.1 - CONSTRUCTION WASTE MANAGEMENT. RECYCLE AND/OR SALVAGE FOR REUSE A MINIMUM OF 65 PERCENT OF THE NON-HAZARDOUS CONSTRUCTION AND DEMOLITION WASTE IN ACCORDANCE WITH SECTION 5.408.1.1, 5.408.1.2 OR 5.408.1.3; OR MEET A LOCAL CONSTRUCTION AND DEMOLITION WASTE MANAGEMENT ORDINANCE, WHICHEVER IS MORE STRINGENT.
2. CA GBC 5.408.1.2 - WASTE MANAGEMENT COMPANY. UTILIZE A WASTE MANAGEMENT COMPANY THAT CAN PROVIDE VERIFIABLE DOCUMENTATION THAT THE PERCENTAGE OF CONSTRUCTION AND DEMOLITION WASTE MATERIAL DIVERTED FROM THE LANDFILL COMPLIES WITH THIS SECTION.
3. CA GBC 5.408.1.3 - WASTE STREAM REDUCTION ALTERNATIVE. THE COMBINED WEIGHT OF NEW CONSTRUCTION DISPOSAL THAT DOES NOT EXCEED TWO POUNDS PER SQUARE FOOT OF BUILDING AREA MAY BE DEEMED TO MEET THE 65 PERCENT MINIMUM REQUIREMENT AS APPROVED BY THE ENFORCING AGENCY.
4. CA GBC 5.408.1.4 - DOCUMENTATION. DOCUMENTATION SHALL BE PROVIDED TO THE ENFORCING AGENCY WHICH DEMONSTRATES COMPLIANCE WITH SECTIONS 5.408.1.1 THROUGH 5.408.1.3. THE WASTE MANAGEMENT PLAN SHALL BE UPDATED AS NECESSARY AND SHALL BE ACCESSIBLE DURING CONSTRUCTION FOR EXAMINATION BY THE ENFORCING AGENCY.
5. CA GBC 5.408.2 - UNIVERSAL WASTE. VERIFICATION SHALL BE PROVIDED THAT UNIVERSAL WASTE ITEMS AS SPECIFIED IN THIS SECTION AS WELL AS OTHER CALIFORNIA PROHIBITED UNIVERSAL WASTE MATERIALS ARE DISPOSED OF PROPERLY AND ARE DIVERTED FROM LANDFILLS.
6. CA GBC 5.408.3 - EXCAVATED SOIL AND LAND CLEARING DEBRIS. 100 PERCENT OF TREES, STUMPS, ROCKS AND ASSOCIATED VEGETATION AND SOILS RESULTING PRIMARILY FROM LAND CLEARING SHALL BE REUSED OR RECYCLED. FOR A PHASED PROJECT, SUCH MATERIAL MAY BE STOCKPILED ON SITE UNTIL THE STORAGE SITE IS DEVELOPED.

B. BUILDING MAINTENANCE AND OPERATION

1. CA GBC 5.410.1 - RECYCLING BY OCCUPANTS. PROVIDE READILY ACCESSIBLE AREAS THAT SERVE THE ENTIRE BUILDING AND ARE IDENTIFIED FOR THE DEPOSITING, STORAGE AND COLLECTION OF NON-HAZARDOUS MATERIALS FOR RECYCLING, INCLUDING (AT A MINIMUM) PAPER, CORRUGATED CARDBOARD, GLASS, PLASTICS, ORGANIC WASTE, AND METALS OR MEET A LAWFULLY ENACTED LOCAL RECYCLING ORDINANCE, IF MORE RESTRICTIVE. SEE EXCEPTIONS; COMPLY WITH "ADDITIONS" REQMNT.
2. CA GBC 5.410.2.4 - FUNCTIONAL PERFORMANCE TESTING. FUNCTIONAL PERFORMANCE TESTS SHALL DEMONSTRATE THE CORRECT INSTALLATION AND OPERATION OF EACH COMPONENT, SYSTEM AND SYSTEM- TO SYSTEM INTERFACE IN ACCORDANCE WITH THE APPROVED PLANS AND SPECIFICATIONS. FUNCTIONAL PERFORMANCE TESTING REPORTS SHALL CONTAIN INFORMATION ADDRESSING EACH OF THE BUILDING COMPONENTS TESTED, THE TESTING METHODS UTILIZED, AND INCLUDE ANY READINGS AND ADJUSTMENTS MADE. BY G.C.
3. CA GBC 5.410.2.5 - DOCUMENTATION AND TRAINING. A SYSTEMS MANUAL AND SYSTEMS OPERATIONS TRAINING ARE REQUIRED, INCLUDING OCCUPATIONAL SAFETY AND HEALTH ACT (OSHA) REQUIREMENTS IN CALIFORNIA CODE OF REGULATIONS (CCR), TITLE 8, SECTION 5142, AND OTHER RELATED REGULATIONS. BY G.C.
4. CA GBC 5.410.2.5.1 - SYSTEMS MANUAL. DOCUMENTATION OF THE OPERATIONAL ASPECTS OF THE BUILDING SHALL BE COMPLETED WITHIN THE SYSTEMS MANUAL AND DELIVERED TO THE BUILDING OWNER OR REPRESENTATIVE. BY G.C.
5. CA GBC 5.410.2.5.2 - SYSTEMS OPERATIONS TRAINING. A PROGRAM FOR TRAINING OF THE APPROPRIATE MAINTENANCE STAFF FOR EACH EQUIPMENT TYPE AND/OR SYSTEM SHALL BE DEVELOPED AND DOCUMENTED IN THE COMMISSIONING REPORT. BY G.C.
6. CA GBC 5.410.2.6 - COMMISSIONING REPORT. A REPORT OF COMMISSIONING PROCESS ACTIVITIES UNDERTAKEN THROUGH THE DESIGN AND CONSTRUCTION PHASES OF THE BUILDING PROJECT SHALL BE COMPLETED AND PROVIDED TO THE OWNER OR REPRESENTATIVE. BY DESIGN TEAM.

C. TESTING AND ADJUSTING

1. CA GBC 5.410.4 - TESTING AND ADJUSTING. A WRITTEN PLAN OF PROCEDURES FOR TESTING AND ADJUSTING THE HVAC SYSTEMS WILL BE DEVELOPED AND FOLLOWED FOR HVAC SYSTEMS AND CONTROLS, INDOOR AND OUTDOOR LIGHTING CONTROLS, AND WATER HEATING SYSTEMS. TESTING AND ADJUSTING PROCEDURES WILL BE IN ACCORDANCE WITH MANUFACTURER'S SPECIFICATIONS AND APPLICABLE STANDARDS.
2. CA GBC 5.410.4.3.1 - HVAC BALANCING. IN ADDITION TO TESTING AND ADJUSTING, BEFORE A NEW SPACE-CONDITIONING SYSTEM SERVING A BUILDING OR SPACE IS OPERATED FOR NORMAL USE, THE SYSTEM SHALL BE BALANCED IN ACCORDANCE WITH THE PROCEDURES DEFINED BY THE TESTING ADJUSTING AND BALANCING BUREAU NATIONAL STANDARDS; THE NATIONAL ENVIRONMENTAL BALANCING BUREAU PROCEDURAL STANDARDS; ASSOCIATED AIR BALANCE COUNCIL NATIONAL STANDARDS OR AS APPROVED BY THE ENFORCING AGENCY.
3. CA GBC 5.410.4.4 - REPORTING. AFTER COMPLETION OF TESTING, ADJUSTING AND BALANCING, A FINAL REPORT OF TESTING WILL BE PROVIDED BY THE INDIVIDUAL RESPONSIBLE FOR PERFOMING THE SERVICES. THESE REPORTS WILL BE PROVIDED TO THE ENFORCING AGENCY.
4.
5. CA GBC 5.410.4.5 - OPERATION AND MAINTENANCE (O & M) MANUAL. THE BUILDING OWNER OR REPRESENTATIVE WILL BE PROVIDED WITH A DETAILED OPERATING AND MAINTENANCE INSTRUCTIONS AND COPIES OF GUARANTIES/WARRANTIES FOR EACH SYSTEM.

D. FINISH MATERIAL POLLUTION CONTROL

1. CA GBC 5.504.4.1, ITEM 1 - ADHESIVES, ADHESIVE BONDING PRIMERS, ADHESIVE PRIMERS, SEALANTS, SEALANT PRIMERS AND CAULKS SHALL COMPLY WITH AIR QUALITY MANAGEMENT DISTRICT RULES PER SCAQMD RULE 1168 VOC LIMITS; SEE GBC FOR FULL REQMNTS.
2. CA GBC 5.504.4.1, ITEM 2 - AEROSOL ADHESIVES AND SMALLER UNIT SIZES OF ADHESIVES AND SEALANT OR CAULKING COMPOUNDS (IN UNITS OF PRODUCT, LESS PACKAGING, WHICH DO NOT WEIGH MORE THAN ONE POUND AND DO NOT CONSIST OF MORE THAN 16 FLUID OUNCES) SHALL COMPLY WITH STATEWIDE VOC STANDARDS AND OTHER REQUIREMENTS, INCLUDING PROHIBITIONS ON USE OF CERTAIN TOXIC COMPOUNDS OF CCR TITLE 17 COMMENCING WITH SECTION 94507.
3. CA GBC 5.504.4.3 - ARCHITECTURAL PAINTS AND COATINGS SHALL COMPLY WITH GREEN BUILDING CODE TABLE 5.504.4.3. VERIFICATION OF COMPLIANCE WITH THIS SECTION SHALL BE PROVIDED AT THE REQUEST OF THE ENFORCING AGENCY.
4. CA GBC 5.504.4.4 - CARPET SYSTEMS, INCLUDING CUSHION AND ADHESIVE, TO COMPLY WITH GREEN BLDG CODE 5.504.4.4 REQUIREMENTS SUCH AS CRI GREEN LABEL PLUS AND OTHER OPTIONS LISTED.
5. CA GBC 5.504.4.5 COMPOSITE WOOD PRODUCTS - HARDWOOD PLYWOOD, PARTICLE BOARD AND MEDIUM DENSITY FIBERBOARD COMPOSITE WOOD PRODUCTS USED ON THE INTERIOR OR EXTERIOR OF THE BUILDING SHALL MEET THE REQUIREMENTS FOR FORMALDEHYDE PER GREEN BUILDING CODE TABLE 5.504.4.5. VERIFICATION OF COMPLIANCE WITH THIS SECTION SHALL BE PROVIDED AT THE REQUEST OF THE ENFORCING AGENCY.
6. CA GBC 5.504.4.6 - RESILIENT FLOORING SYSTEMS SHALL COMPLY WITH THE VOC EMISSION LIMITS DEFINED IN THE 2012 CHPS CRITERIA AND LISTED ON ITS HIGH PERFORMANCE PRODUCTS DATABASE. DOCUMENTATION SHALL BE PROVIDED VERIFYING THAT RESILIENT FLOORING MATERIALS MEET THE POLLUTANT EMISSION LIMITS.
7. CA GBC 5.504.4.7 - THERMAL INSULATION COMPLY WITH THE REQUIREMENTS OF THE CALIFORNIA DEPARTMENT OF PUBLIC HEALTH, "STANDARD METHOD FOR THE TESTING AND EVALUATION OF VOLATILE ORGANIC CHEMICAL EMISSIONS FROM INDOOR SOURCES USING ENVIRONMENTAL CHAMBERS," VERSION 1.2, JANUARY 2017 (EMISSION TESTING METHOD FOR CALIFORNIA SPECIFICATION 01350).

CA GBC 5.504.4.8 - ACOUSTICAL CEILINGS AND WALL PANELS COMPLY WITH THE REQUIREMENTS OF THE CALIFORNIA DEPARTMENT OF PUBLIC HEALTH, "STANDARD METHOD FOR THE TESTING AND EVALUATION OF VOLATILE ORGANIC CHEMICAL EMISSIONS FROM INDOOR SOURCES USING ENVIRONMENTAL CHAMBERS," VERSION 1.2, JANUARY 2017 (EMISSION TESTING METHOD FOR CALIFORNIA SPECIFICATION 01350).

E. QUALIFICATIONS

1. CA GBC 702.1 - INSTALLER TRAINING. HVAC SYSTEM INSTALLERS SHALL BE TRAINED AND CERTIFIED IN THE PROPER INSTALLATION OF HVAC SYSTEMS INCLUDING DUCTS AND EQUIPMENT BY A NATIONALLY OR REGIONALLY RECOGNIZED TRAINING OR CERTIFICATION PROGRAM. UNCERTIFIED PERSONS MAY PERFORM HVAC INSTALLATIONS WHEN UNDER THE DIRECT SUPERVISION AND RESPONSIBILITY OF A PERSON TRAINED AND CERTIFIED TO INSTALL HVAC SYSTEMS OR CONTRACTOR LICENSED TO INSTALL HVAC SYSTEMS.

F. COMPLIANCE FORMS AND WORKSHEETS

1. ALL COMPLIANCE FORMS AND WORKSHEETS IN CHAPTER 8 OF CA GBC FOR NON RESIDENTIAL CONSTRUCTION NEED TO BE COMPLETED BY CONTRACTOR OR SUBCONTRACTORS AND SUBMITTED TO THE ENFORCING AGENCY.

MANDATORY

CHAPTER 3
GREEN BUILDING
SECTION 301 GENERAL

301.1 SCOPE. Buildings shall be designed to include the green building measures specified as mandatory in the application checklists contained in this code. Voluntary green building measures are also included in the application checklists and may be included in the design and construction of structures covered by this code, but are not required unless adopted by a city, county, or city and county as specified in Section 101.7.

301.3 NONRESIDENTIAL ADDITIONS AND ALTERATIONS. [BSC-CG] The provisions of individual sections of Chapter 5 apply to newly constructed buildings, building additions of 1,000 square feet or greater, and/or building alterations with a permit valuation of $200,000 or above (for occupancies within the authority of California Building Standards Commission). Code sections relevant to additions and alterations shall only apply to the portions of the building being added or altered within the scope of the permitted work.

A code section will be designated by a banner to indicate where the code section only applies to newly constructed buildings [N] or to additions and/or alterations [A]. When the code section applies to both, no banner will be used.

301.3.1 Nonresidential additions and alterations that cause updates to plumbing fixtures only:

Note: On and after January 1, 2014, certain commercial real property, as defined in Civil Code Section 1101.3, shall have its noncompliant plumbing fixtures replaced with appropriate water-conserving plumbing fixtures under specific circumstances. See Civil Code Section 1101.1 *et seq.* for definitions, types of commercial real property affected, effective dates, circumstances necessitating replacement of noncompliant plumbing fixtures, and duties and responsibilities for ensuring compliance.

301.3.2 Waste Diversion. The requirements of Section 5.408 shall be required for additions and alterations whenever a permit is required for work.

301.4 PUBLIC SCHOOLS AND COMMUNITY COLLEGES. (see GBSC)
301.5 HEALTH FACILITIES. (see GBSC)

SECTION 302 MIXED OCCUPANCY BUILDINGS

302.1 MIXED OCCUPANCY BUILDINGS. In mixed occupancy buildings, each portion of a building shall comply with the specific green building measures applicable to each specific occupancy.

SECTION 303 PHASED PROJECTS

303.1 PHASED PROJECTS. For shell buildings and others constructed for future tenant improvements, only those code measures relevant to the building components and systems considered to be new construction (or newly constructed) shall apply.

303.1.1 Initial Tenant improvements. The provisions of this code shall apply only to the initial tenant improvements to a project. Subsequent tenant improvements shall comply with the scoping provisions in Section 301.3 non-residential additions and alterations.

ABBREVIATION DEFINITIONS:

HCD	Department of Housing and Community Development
BSC	California Building Standards Commission
DSA-SS	Division of the State Architect, Structural Safety
OSHPD	Office of Statewide Health Planning and Development
LR	Low Rise
HR	High Rise
AA	Additions and Alterations
N	New

CHAPTER 5
NONRESIDENTIAL MANDATORY MEASURES
DIVISION 5.1 PLANNING AND DESIGN

SECTION 5.101 GENERAL
5.101.1 SCOPE
The provisions of this chapter outline planning, design and development methods that include environmentally responsible site selection, building design, building siting and development to protect, restore and enhance the environmental quality of the site and respect the integrity of adjacent properties.

SECTION 5.102 DEFINITIONS
5.102.1 DEFINITIONS
The following terms are defined in Chapter 2 *(and are included here for reference)*

CUTOFF LUMINAIRES. Luminaires whose light distribution is such that the candela per 1000 lamp lumens does not numerically exceed 25 (2.5 percent) at an angle of 90 degrees above nadir, and 100 (10 percent) at a vertical angle of 80 degrees above nadir. This applies to all lateral angles around the luminaire.

LOW-EMITTING AND FUEL EFFICIENT VEHICLES.
Eligible vehicles are limited to the following:

1. Zero emission vehicle (ZEV), enhanced advanced technology PZEV (enhanced AT ZEV) or transitional zero emission vehicles (TZEV) regulated under CCR, Title 13, Section 1962.
2. High-efficiency vehicles, regulated by U.S. EPA, bearing a fuel economy and greenhouse gas rating od 9 oe 10 as regulated under 40 CFR Section 600 Subpart D.

NEIGHBORHOOD ELECTRIC VEHICLE (NEV). A motor vehicle that meets the definition of "low-speed vehicle" either in Section 385.5 of the Vehicle Code or in 49CFR571.500 (as it existed on July 1, 2000), and is certified to zero-emission vehicle standards.

TENANT-OCCUPANTS. Building occupants who inhabit a building during its normal hours of operation as permanent occupants, such as employees, as distinguished from customers and other transient visitors.

VANPOOL VEHICLE. Eligible vehicles are limited to any motor vehicle, other than a motortruck or truck tractor, designed for carrying more than 10 but not more than 15 persons including the driver, which is maintained and used primarily for the nonprofit work-related transportation of adults for the purpose of ridesharing.

Note: Source: Vehicle Code, Division 1, Section 668

ZEV. Any vehicle certified to zero-emission standards.

☐ CONTRACTOR TO FULFILL REQUIREMENTS OF THIS SECTION ON SITE DURING CONSTRUCTION

SECTION 5.106 SITE DEVELOPMENT

5.106.1 STORM WATER POLLUTION PREVENTION FOR PROJECTS THAT DISTURB LESS THAN ONE ACRE OF LAND. Newly constructed projects and additions which disturb less than one acre of land, and are not part of a larger common plan of development or sale, shall prevent the pollution of storm water runoff from the construction activities through one or more of the following measures:

5.106.1.1 Local ordinance. Comply with a lawfully enacted storm water management and/or erosion control ordinance.

5.106.1.2 Best Management Practices (BMPs). Prevent the loss of soil through wind or water erosion by implementing an effective combination of erosion and sediment control and good housekeeping BMPs.

1. Soil loss BMPs that should be considered for implementation as appropriate for each project include, but are not limited to, the following:
   a. Scheduling construction activity during dry weather, when possible.
   b. Preservation of natural features, vegetation, soil, and buffers around surface waters.
   c. Drainage swales or lined ditches to control stormwater flow.
   d. Mulching or hydroseeding to stabilize disturbed soils.
   e. Erosion control to protect slopes.
   f. Protection of storm drain inlets (gravel bags or catch basin inserts).
   g. Perimeter sediment control (perimeter silt fence, fiber rolls).
   h. Sediment trap or sediment basin to retain sediment on site.
   i. Stabilized construction exits.
   j. Wind erosion control.
   k. Other soil loss BMPs acceptable to the enforcing agency.
2. Good housekeeping BMPs to manage construction equipment, materials, non-stormwater discharges and wastes that should be considered for implementation as appropriate for each project include, but are not limited to, the following:
   a. Dewatering activities.
   b. Material handling and waste management.
   c. Building materials stockpile management.
   d. Management of washout areas (concrete, paints, stucco, etc.).
   e. Control of vehicle/equipment fueling to contractor's staging area.
   f. Vehicle and equipment cleaning performed off site.
   g Spill prevention and control.
   h. Other housekeeping BMPs acceptable to the enforcing agency.

5.106.2 STORMWATER POLLUTION PREVENTION FOR PROJECTS THAT DISTURB ONE OR MORE ACRES OF LAND. Comply with all lawfully enacted stormwater discharge regulations for projects that (1) disturb one acre or more of land, or (2) disturb less than one acre of land but are part of a larger common plan of development sale.

Note: Projects that (1) disturb one acre or more of land, or (2) disturb less than one acre of land but are part of the larger common plan of development or sale must comply with the post-construction requirements detailed in the applicable National Pollutant Discharge Elimination System (NPDES) General permit for Stormwater Discharges Associated with Construction and Land Disturbance Activities issued by the State Water Resources Control Board or the Lahontan Regional Water Quality Control Board (for projects in the Lake Tahoe Hydrologic Unit).

The NPDES permits require postconstruction runoff (post-project hydrology) to match the preconstruction runoff (pre-project hydrology) with the installation of postconstruction stormwater management measures. The NPDES permits emphasize runoff reduction through on-site stormwater use, interception, evapotranspiration, and infiltration through nonstructural controls, such as Low Impact Development (LID) practices, and conversation design measures. Stormwater volume that cannot be addressed using nonstructural practices is required to be captured in structural practices and be approved by the enforcing agency.

Refer to the current applicable permits on the State Water Resources Control Board website at: www.waterboards.ca.gov/constructionstormwater. Consideration to the stormwater runoff management measures should be given during the initial design process for appropriate integration into site development.

MANDATORY

N/A — RENOVATION PROJECT INTENDED TO ADDRESS ACCESSIBILITY SHORTFALLS

5.106.4 BICYCLE PARKING. For buildings within the authority of California Building Standards Commission as specified in Section 103, comply with Section 5.106.4.1. For buildings within the authority of the Division of the State Architect pursuant to Section 105, comply with Section 5.106.4.2

5.106.4.1 Bicycle parking. [BSC-CG] Comply with Sections 5.106.4.1.1 and 5.106.4.1.2; or meet the applicable local ordinance, whichever is stricter.

5.106.4.1.1 Short-term bicycle parking. If the new project or an addition or alteration is anticipated to generate visitor traffic, provide permanently anchored bicycle racks within 200 feet of the visitors' entrance, readily visible to passers-by, for 5% of new visitor motorized vehicle parking spaces being added, with a minimum of one two-bike capacity rack.
Exception: Additions or alterations which add nine or less visitor vehicular parking spaces.

5.106.4.1.2 Long-term bicycle parking. For new buildings with tenant spaces that have 10 or more tenant-occupants, provide secure bicycle parking for 5 percent of the tenant-occupant vehicular parking spaces with a minimum of one bicycle parking facility.

5.106.4.1.3 For additions or alterations that add 10 or more tenant-occupant vehicular parking spaces, provide secure bicycle parking for 5 percent of the tenant vehicular parking spaces being added, with a minimum of one bicycle parking facility.

5.106.4.1.4 For new shell buildings in phased projects provide secure bicycle parking for 5 percent of the anticipated tenant-occupant vehicular parking spaces with a minimum of one bicycle parking facility.

5.106.4.1.5 Acceptable bicycle parking facility for Sections 5.106.4.1.2, 5.106.4.1.3, and 5.106.4.1.4 shall be convenient from the street and shall meet one of the following:

1. Covered, lockable enclosures with permanently anchored racks for bicycles;
2. Lockable bicycle rooms with permanently anchored racks; or
3. Lockable, permanently anchored bicycle lockers.

Note: Additional information on recommended bicycle accommodations may be obtained from Sacramento Area Bicycle Advocates.

5.106.4.2 Bicycle parking. [DSA-SS] For public schools and community colleges, comply with Sections 5.106.4.2.1 and 5.106.4.2.2

X — PROJECT DOES NOT FALL UNDER THIS CATEGORY

5.106.4.2.1 Student bicycle parking. Provide permanently anchored bicycle racks conveniently accessed with a minimum of four two-bike capacity racks per new building.
5.106.4.2.2 Staff bicycle parking. Provide permanent, secure bicycle parking conveniently accessed with a minimum of two staff bicycle parking spaces per new building. Acceptable bicycle parking facilities shall be convenient from the street or staff parking area and shall meet one of the following:

1. Covered, lockable enclosures with permanently anchored racks for bicycles;
2. Lockable bicycle rooms with permanently anchored racks; or
3. Lockable, permanently anchored bicycle lockers.

N/A — RENOVATION PROJECT INTENDED TO ADDRESS ACCESSIBILITY SHORTFALLS

5.106.5.3 Electric vehicle (EV) charging. [N] Construction to provide electric vehicle infrastructure and facilitate electric vehicle charging shall comply with Section 5.106.5.3.1 and shall be provided in accordance with regulations in the California Building Code and the California Electrical Code.

Exceptions:
1. On a case-by-case basis where the local enforcing agency has determined compliance with this section is not feasible based upon one of the following conditions:
   a. Where there is no local utility power supply
   b. Where the local utility is unable to supply adequate power.
   c. Where there is evidence suitable to the local enforcement agency substantiating the local utility infrastructure design requirements, directly related to the implementation of Section 5.106.5.3, may adversely impact the construction cost of the project.
2. Parking spaces accessible only by automated mechanical car parking systems are not required to comply with this code section

5.106.5.3.1 EV capable spaces.
[N] EV capable spaces shall be provided in accordance with Table 5.106.5.3.1 and the following requirements:
1. Raceways complying with the California Electrical Code and no less that 1-inch (25 mm) diameter shall be provided and shall originate at a service panel or a subpanel(s) serving the area, and shall terminate in close proximity to the proposed location of the EV capable and into a suitable listed cabinet, box,enclosure or equivalent. A common raceway may be used to serve multiple EV charging spaces.
2. A service panel or subpanel (s) shall be provided with panel space and electrical load capacity for a dedicated 208/240 volt, 40-ampere minimum branch circuit for each EV capable space, with delivery of 30-ampere minimum to an installed EVSE at each EVCS.
3. The electrical system and any on-site distribution transformers shall have sufficient capacity to supply full rated amperage at each EV capable space.
4. The service panel or subpanel circuit directory shall identify the reserved overcurrent protective devices space(s) as "EV CAPABLE". The raceway termination location shall be permanently and visibly marked as "EV CAPABLE."

Note: A parking space served by electric vehicle supply equipment or designed as a future EV charging space shall count as at least one standard automobile parking space only for the purpose of complying with any applicable minimum parking space requirements established by an enforcement agency. See vehicle Code Section 22511.2 for further details.

TABLE 5.106.5.3.1		
TOTAL NUMBER OF ACTUAL PARKING SPACES	**NUMBER OF REQUIRED EV CAPABLE SPACES**	NUMBER OF EVCS (EV CAPABLE SPACES PROVIDED WITH EVSE)^2
0-9	0	0
10-25	2	0
26-50	8	2
51-75	13	3
76-100	17	4
101-150	25	6
151-200	35	9
201 AND OVER	20% of total[1]	25% of EV capable spaces[1]

1. Where there is insufficient electrical supply.
2. The number of required EVCS (EV capable spaces provided with EVSE) in column 3 count towards the total number of required EV capable spaces shown in column 2.

5.106.5.3.2 Electric vehicle charging stations (EVCS)
EV capable spaces shall be provided with EVSE to create EVCS in the number indicated in Table 5.106.5.3.1. The EVCS required by Table 5.106.5.3.1 may be provided with EVSE in any combination of Level 2 and Direct Current Fast Charging (DCFC), except that at least one Level 2 EVSE shall be provided.

One EV charger with multiple connectors capable of charging multiple EVs simultaneously shall be permitted if the electrical load capacity required by Section 5.106.5.3.1 for each EV capable space is accumulatively supplied to the EV charger.

The installation of each DCFC EVSE shall be permitted to reduce the minimum number of required EV capable spaces without EVSE by five and reduce proportionally the required electrical load capacity to the service panel or subpanel.

5.106.5.3.3 Use of automatic load management systems (ALMS).
ALMS shall be permitted for EVCS. When ALMS is installed, the required electrical load capacity specified in Section
5.106.5.3.1 for each EVCS may be reduced when serviced by an EVSE controlled by an ALMS. Each EVSE controlled by an ALMS shall deliver a minimum 30 amperes to an EV when charging one vehicle and shall deliver a minimum 3.3 kW while simultaneously charging multiple EVs.

5.106.5.3.4 Accessible EVCS.
When EVSE is installed, accessible EVSC shall be provided in accordance with the *California Building Code*, Chapter 11B, Section 11B-228.3.
Note: For EVCS signs, refer to Caltrans Traffic Operations Policy Directive 13-01 (Zero Emission Vehicle Signs and Pavement Markings) or its successor(s).

5.106.5.4 Electric Vehicle (EV) charging: medium-duty and heavy-duty. [N]
Construction shall comply with section 5.106.5.4.1 to facilitate future installation of electric vehicle supply equipment (EVSE). Construction for warehouses, grocery stores and retail stores with planned off-street loading spaces shall also comply with Section 5.106.5.4.1 for future installation of medium- and heavy-duty EVSE.
Exceptions:
1. On a case-by-case basis where the local enforcing agency has determined compliance with this section is not feasible based upon one of the following conditions:
   a. Where there is no local utility power supply.
   b. Where the local utility is unable to supply adequate power.
   c. Where there is evidence suitable to the local enforcing agency substantiating that additional local utility infrastructure design requirements, directly related to the implementation of Section 5.106.5.3, may adversely impact the construction cost of the project.

When EVSE(s) is/are installed, it shall be in accordance with the *California Building Code*, the *California Electrical Code* and as follows:

5.106.5.4.1 Electric vehicle charging readiness requirements for warehouse, grocery stores and retail stores with planned off-street loading spaces.
[N] In order to avoid future demolition when adding EV charging supply and distribution equipment, spare raceways(s) or busway(s) and adequate capacity for transformers(s), service panels(s) or subpanel(s) shall be installed at the time of construction in accordance with the California Electrical Code. Construction plans and specifications shall include but are not limited to, the following:
1. The transformer, main service equipment and subpanel shall meet the minimum power requirement in Table 5.106.5.4.1 to accommodate the dedicated branch circuits for the future installation of EVSE.
2. The construction documents shall indicate on or more location(s) convenient to the planned offstreet loading space(s) reserved for medium-and heavy-duty ZEV charging cabinets and charging dispensers, and a pathway reserved for routing of conduit from the termination of the raceway(s) or busway(s) to the charging cabinet(s) and dispenser(s) as shown in Table 5.106.5.4.1
3. Raceway(s) or busway(s) originating at a main service panel or a subpanel(s) serving the area where potential future medium-and heavy-duty EVSE will be located and shall terminate in close proximity to the potential future location of the charging equipments for medium- and heavy-duty vehicles.
4. The raceway(s) or busway(s) shall be sufficient size to carry the minimum additional system load to the future location of the charging for medium- and heavy-duty ZEVs as shown in Table 5.106.5.4.1.

MANDATORY

N/A — PROJECT DOES NOT FALL UNDER THIS CATEGORY

TABLE 5.106.5.4.1 RACEWAY CONDUIT AND PANEL POWER REQUIREMENTS FOR MEDIUM- AND HEAVY-DUTY EVSE [N]			
BUILDING TYPE	BUILDING SIZE (SQ. FT.)	**NUMBER OF OFF-STREET LOADING SPACES**	ADDITIONAL CAPACITY REQUIRED (KVA) FOR RACEWAY & BUSWAY AND TRANSFORMER & PANEL
Grocery	10,000 to 90,000	1 or 2	200
		3 or Greater	400
	Greater than 90,000	1 or Greater	400
Retail	10,000 to 135,000	1 or 2	200
		3 or Greater	400
	Greater than 135,000	1 or Greater	400
Warehouse	20,000 to 256,000	1 or 2	200
		3 or Greater	400
	Greater than 256,000	1 or Greater	400

N/A — NO CHANGE IN EXTERIOR LIGHTING

5.106.8 LIGHT POLLUTION REDUCTION. [N]. l Outdoor lighting systems shall be designed and installed to comply with the following:

1. The minimum requirements in the California Energy Code for Lighting Zones 0-4 as defined in Chapter 10, Section 10-114 of the California Administrative Code; and
2. Backlight (B) ratings as defined in IES TM-15-11 (shown in Table A-1 in Chapter 8);
3. Uplight and Glare ratings as defined in California Energy Code (shown in Tables 130.2-A and 130.2-B in Chapter 8) and
4. Allowable BUG ratings not exceeding those shown in Table 5.106.8, [N] or Comply with a local ordinance lawfully enacted pursuant to Section 101.7, whichever is more stringent.

Exceptions: [N]

1. Luminaires that qualify as exceptions in Sections 130.2 (b) and 140.7 of the California Energy Code.
2. Emergency lighting.
3. Building facade meeting the requirements in Table 140.7-B of the California Energy Code, Part 6.
4. Custom lighting features as allowed by the local enforcing agency, as permitted by Section 101.8 Alternate materials, designs and methods of construction.
5. Luminaires with less than 6,200 initial luminaire lumens.

TABLE 5.106.8 [N] MAXIMUM ALLOWABLE BACKLIGHT, UPLIGHT AND GLARE (BUG) RATINGS 1,2					
ALLOWABLE RATING	**LIGHTING ZONE LZ0**	**LIGHTING ZONE LZ1**	**LIGHTING ZONE LZ2**	**LIGHTING ZONE LZ3**	**LIGHTING ZONE LZ4**
MAXIMUM ALLOWABLE BACKLIGHT RATING 3					
Luminaire greater than 2 mounting heights (MH) from property line	N/A	No Limit	No Limit	No Limit	No Limit
Luminaire back hemisphere is 1-2 MH from property line	N/A	B2	B3	B4	B4
Luminaire back hemisphere is 0.5-1 MH from property line	N/A	B1	B2	B3	B3
Luminaire back hemisphere is less than 0.5 MH from property line	N/A	B0	B0	B1	B2
MAXIMUM ALLOWABLE UPLIGHT RATING (U)					
For area lighting 3	N/A	U0	U0	U0	U0
For all other outdoor lighting,including decorative luminaires	N/A	U1	U2	U3	UR
MAXIMUM ALLOWABLE GLARE RATING 5 (G)					
MAXIMUM ALLOWABLE GLARE RATING 5 (G)	N/A	G1	G2	G3	G4
MAXIMUM ALLOWABLE GLARE RATING 5 (G)	N/A	G0	G1	G1	G2
MAXIMUM ALLOWABLE GLARE RATING 5 (G)	N/A	G0	G0	G1	G1
MAXIMUM ALLOWABLE GLARE RATING 5 (G)	N/A	G0	G0	G0	G1

1. IESNA Lighting Zones 0 and 5 are not applicable; refer to Lighting Zones as defined in the *California Energy Code* and Chapter 10 of the *California Administrative Code.*

2. For property lines that abut public walkways, bikeways, plazas and parking lots, the property line may be considered to be 5 feet beyond the actual property line for purpose of determining compliance with this section. For property lines that abut public roadways and public transit corridors, the property line may be considered to be the centerline of the public roadway or public transit corridor for the purpose of determining compliance with this section.

3. General lighting luminaires in areas such as outdoor parking, sales or storage lots shall meet these reduced ratings. Decorative luminaires located in these areas shall meet *U*-value limits for "all other outdoor lighting"

5.106.8.1 Facing- Backlight
Luminaries within 2MH of a property line shall be oriented so that the nearest property line is behind the fixture, and shall comply with the backlight rating specified in Table 5.106.8 based on the lighting zone and distance to the nearest point of that property line.
Exception: Corners. If two property lines (or two segments of the same property line) have equidistant point to the luminaire, then the luminaire may be oriented so that the intersection of the two lines (the corner) is directly behind the luminaire. The luminaire shall still use the distance to the nearest points(s) on the property lines to determine the required backlight rating.

5.106.8.2 Facing-Glare.
For luminaires covered by 5.106.8.1, if a property line also exists within or extends into the front hemisphere within 2MH of the luminaire then the luminaire shall comply with the more stringent glare rating specified in Table 5.106.8 based on the lighting zone and distance to the nearest point on the nearest property line within the front hemisphere.

Note: [N]
1. See also *California Building Code*, Chapter 12, Section 1205.6 for college campus lighting requirements for parking facilities and walkways.
2. Refer to Chapter 8 (Compliance Forms, Worksheets and Reference Material) for IES TM-15-11 Table A-1, *California Energy Code* Tables 130.2-A and 130.2-B.
3. Refer to the *California Building Code* for requirements for additions and alterations.

X — SEE CIVIL DRAWINGS FOR DRAINAGE PATH

5.106.10 GRADING AND PAVING. Construction plans shall indicate how site grading or a drainage system will manage all surface water flows to keep water from entering buildings. Examples of methods to manage surface water include, but are not limited to, the following:

1. Swales.
2. Water collection and disposal systems.
3. French drains.
4. Water retention gardens.
5. Other water measures which keep surface water away from buildings and aid in groundwater recharge.
   Exception: Additions and alterations not altering the drainage path.

X — SEE LANDSCAPE DRAWINGS FOR COMPLIANCE.

5.106.12 SHADE TREES [DSA-SS]. Shade Trees shall be planted to comply with Sections 5.106.12.1, 5.106.12.2, and 5.106.12.3. Percentages shown shall be measured at noon on the summer solstice. Landscape irrigation necessary to establish and maintain tree health shall comply with Section 5.304.6.

5.106.12.1 Surface parking areas. Shade tree plantings, minimum #10 container size or equal, shall be installed to provide shade over 50 percent of the parking area within 15 years.

Exceptions: Surface parking area covered by solar photovoltaic shade structures with roofing materials that comply with Table A5.106.11.2.2 in Appendix A5 shall be permitted in whole or in part in lieu of shade tree planting.

5.106.12.2 Landscape areas. Shade tress plantings, minimum #10 container size or equal shall be installed to provide shade of 20% of the landscape area within 15 years.

Exceptions: Playfields for organized sport activity are not included in the total area calculation.

5.106.12.3. Hardscape areas. Shade tree plantings, minimum #10 container size or equal shall be installed to provide shade over 20 percent of the hardscape area within 15 years.

Exceptions:
1. Walks, hardscape areas covered by solar photovoltaic shade structures or shade structures with roofing materials that comply with Table A5.106.11.2.2 in Appendix A5 shall be permitted in whole or in part in lieu of shade tree planting.
2. Designated and marked play areas of organized sport activity are not included in the total area calculation.

Copyright © 2025

All ideas, designs, arrangements and plans indicated or represented by this drawing are owned by, and the property of, NICHOLS, MELBURG and ROSSETTO and were created, evolved and developed for use on, and in conjunction with, the specified project. None of such ideas, designs, arrangements or plans shall be used by, or disclosed to any person, firm or corporation for any purpose whatsoever without the written permission of NICHOLS, MELBURG and ROSSETTO.

NICHOLS MELBURG & ROSSETTO
ARCHITECTS + ENGINEERS
300 KNOLLCREST DRIVE
REDDING, CA. 96002
(530) 222-3300 (530) 222-3538 FAX
http://www.nmrdesign.com

CONSULTANTS

LICENSE STAMPS

LICENSED ARCHITECT — DEVEN CARTER — C 34730 — REN. 5/31/27 — STATE OF CALIFORNIA

PROJECT NAME

RENOVATION FOR

Humboldt County Animal Shelter

980 Lycoming Ave
McKinleyville, CA 95519

SHEET TITLE

CALGREEN 2022 NON-RESIDENTIAL MANDATORY MEASURES

DRAWING STATUS

CONSTRUCTION DOCUMENTS

BLDG. DEPT. SUBMITTAL

REVISIONS

Sym.	Description	Date

Drawn By	KAJ
Date Issued	04-03-2026
Scale	NTS
Project No.	17-6430

SHEET No.

G010

Login Name: Kurt_J
Plot Date: October 20, 2025 - 4:09 pm
File Name: S:\Projects\5000.COM\2025\25-5953 BBD Grand Prairie TI\7.0 Consult\7.0 Shell Arch\Drawing2.dwg
XREFS: x-AS-ttt

2022 CALIFORNIA GREEN BUILDING STANDARDS CODE NONRESIDENTIAL MANDATORY MEASURES

MANDATORY

DIVISION 5.2 ENERGY EFFICIENCY

SECTION 5.201 GENERAL

5.201.1 Scope [BSC-CG]. *California Energy Code [DSA-SS]*. For the purposes of mandatory energy efficiency standards in this code, the California Energy Commission will continue to adopt mandatory building standards.

DIVISION 5.3 WATER EFFICIENCY AND CONSERVATION

SECTION 5.301 GENERAL

5.301.1 Scope. The provisions of this chapter shall establish the means of conserving water use indoors, outdoors and in wastewater conveyance.

SECTION 5.302 DEFINITIONS

5.302.1 Definitions. The following terms are defined in Chapter 2 *(and are included here for reference)*

EVAPOTRANSPIRATION ADJUSTMENT FACTOR (ETAF) [DSA-SS]. An adjustment factor when applied to reference evapotranspiration that adjusts for plant factors and irrigation efficiency, which ae two major influences on the amount of water that needs to be applied to the landscape.

FOOTPRINT AREA [DSA-SS]. The total area of the furthest exterior wall of the structure projected to natural grade, not including exterior areas such as stairs, covered walkways, patios and decks.

METERING FAUCET. A self-closing faucet that dispenses a specific volume of water for each actuation cycle. The volume or cycle duration can be fixed or adjustable.

GRAYWATER. Pursuant to Health and Safety Code Section 17922.12, "graywater" means untreated wastewater that has not been contaminated by any toilet discharge, has not been affected by infectious, contaminated, or unhealthy bodily wastes, and does not present a threat from contamination by unhealthful processing, manufacturing, or operating wastes. "Graywater" includes, but is not limited to wastewater from bathtubs, showers, bathroom washbasins, clothes washing machines and laundry tubs, but does not include waste water from kitchen sinks or dishwashers.

MODEL WATER EFFICIENT LANDSCAPE ORDINANCE (MWELO). The California ordinance regulating landscape design, installation and maintenance practices that will ensure commercial, multifamily and other developer installed landscapes greater than 2500 square feet meet an irrigation water budget developed based on landscaped area and climatological parameters.

MODEL WATER EFFICIENT LANDSCAPE ORDINANCE (MWELO). [HCD] The California model ordinance (California Code of Regulations, Title 23, Division 2, Chapter 2.7), regulating landscape design, installation and maintenance practices. Local agencies are required to adopt the updated MWELO, or adopt a local ordinance at least as effective as the MWELO.

POTABLE WATER. Water that is drinkable and meets the U.S. Environmental Protection Agency (EPA) Drinking Water Standards. See definition in the California Plumbing Code, Part 5.

POTABLE WATER. [HCD] Water that is satisfactory for drinking, culinary, and domestic purposes, and meets the U.S. Environmental Protection Agency (EPA) Drinking Water Standards and the requirements of the Health Authority Having Jurisdiction.

RECYCLED WATER. Water which, as a result of treatment of waste, is suitable for a direct beneficial use or a controlled use that would not otherwise occur [Water Code Section 13050 (n)]. Simply put, recycled water is water treated to remove waste matter attaining a quality that is suitable to use the water again.

SUBMETER. [HCD 1] A secondary device beyond a meter that measures water consumption of an individual rental unit within a multiunit residential structure or mixed-use residential and commercial structure. (See Civic Code Section 1954.202 (g) and Water code Section 517 for additional details.)

WATER BUDGET. Is the estimated total landscape irrigation water use which shall not exceed the maximum applied water allowance calculated in accordance with the Department of Water Resources Model Efficient Landscape Ordinance (MWELO).

[N/A] NO SEPARATE TENANTS

SECTION 5.303 INDOOR WATER USE

5.303.1 METERS. Separate submeters or metering devices shall be installed for the uses described in Sections 503.1.1 and 503.1.2.

5.303.1.1 Buildings in excess of 50,000 square feet. Separate submeters shall be installed as follows:

1. For each individual leased, rented or other tenant space within the building projected to consume more than 100 gal/day (380 L/day), including, but not limited to, spaces used for laundry or cleaners, restaurant or food service, medical or dental office, laboratory, or beauty salon or barber shop.
2. Where separate submeters for individual building tenants are unfeasible, for water supplied to the following subsystems:
   a. Makeup water for cooling towers where flow through is greater than 500 gpm (30 L/s).
   b. Makeup water for evaporative coolers greater than 6 gpm (0.04 L/s).
   c. Steam and hot water boilers with energy input more than 500,000 Btu/h (147 kW).

5.303.1.2 Excess consumption. A separate submeter or metering device shall be provided for any tenant within a new building or within an addition that is projected to consume more than 1,000 gal/day.

[ ] CONTRACTOR TO FULFILL REQUIREMENTS OF THIS SECTION DURING CONSTRUCTION

5.303.3 WATER CONSERVING PLUMBING FIXTURES AND FITTINGS. Plumbing fixtures (water closets and urinals) and fittings (faucets and showerheads) shall comply with the following:

5.303.3.1 Water Closets. The effective flush volume of all water closets shall not exceed 1.28 gallons per flush. Tank-type water closets shall be certified to the performance criteria of the U.S. EPA WaterSense Specification for Tank-Type toilets.

Note: The effective flush volume of dual flush toilets is defined as the composite, average flush volume of two reduced flushes and one full flush.

5.303.3.2 Urinals.

5.303.3.2.1 Wall-mounted Urinals. The effective flush volume of wall-mounted urinals shall not exceed 0.125 gallons per flush.

5.303.3.2.2 Floor-mounted Urinals. The effective flush volume of floor-mounted or other urinals shall not exceed 0.5 gallons per flush.

5.303.3.3 Showerheads. [BSC-CG]

5.303.3.3.1 Single showerhead. Showerheads shall have a maximum flow rate of not more than 1.8 gallons per minute at 80 psi. Showerheads shall be certified to the performance criteria of the U.S. EPA WaterSense Specification for Showerheads.

5.303.3.3.2 Multiple showerheads serving one shower. When a shower is served by more than one showerhead, the combined flow rate of all the showerheads and/or other shower outlets controlled by a single valve shall not exceed 1.8 gallons per minute at 80 psi, or the shower shall be designed to allow only one shower outlet to be in operation at a time.
Note: A hand-held shower shall be considered a showerhead.

5.303.3.4 Faucets and fountains.

5.303.3.4.1 Nonresidential Lavatory faucets. Lavatory faucets shall have a maximum flow rate of not more than 0.5 gallons per minute at 60 psi.

5.303.3.4.2 Kitchen faucets. Kitchen faucets shall have a maximum flow rate of not more than 1.8 gallons per minute at 60 psi. Kitchen faucets may temporarily increase the flow above the maximum rate, but not to exceed 2.2 gallons per minute at 60 psi, and must default to a maximum flow rate of 1.8 gallons per minute at 60 psi.

5.303.3.4.3 Wash fountains. Wash fountains shall have a maximum flow rate of not more than1.8 gallons per minute/20 [rim space (inches) at 60 psi].

5.303.3.4.4 Metering faucets. Metering faucets shall not deliver more than 0.20 gallons per cycle.

[ ] CONTRACTOR TO FULFILL REQUIREMENTS OF THIS SECTION DURING CONSTRUCTION

5.303.3.4.5 Metering faucets for wash fountains. Metering faucets for wash fountains shall have a maximum flow rate of not more than 0.20 gallons per minute/20 [rim space (inches) at 60 psi].

Note: Where complying faucets are unavailable, aerators or other means may be used to achieve reduction.

5.303.3.4.6 Pre-rinse spray value
When installed, shall meet the requirements in the *California Code of Regulations*, Title 20 (Appliance Efficiency Regulations), Section 1605.1 (h)(4) Table H-2, Section 1605.3 (h)(4)(A), and Section 1607 (d)(7), and shall be equipped with an integral automatic shutoff.

FOR REFERENCE ONLY: The following table and code section have been reprinted from the *California Code of Regulations*, Title 20 (Appliance Efficiency Regulations), Section 1605.1 (h)(4) and Section 1605.3 (h)(4)(A).

TABLE H-2

STANDARDS FOR COMMERCIAL PRE-RINSE SPRAY VALUES MANUFACTURED ON OR AFTER JANUARY 28, 2019

PRODUCT CLASS [spray force in ounce force (ozf)]	MAXIMUM FLOW RATE (gpm)
Product Class 1 (≤ 5.0 ozf)	1.00
Product Class 2 (> 5.0 ozf and ≤ 8.0 ozf)	1.20
Product Class 3 (> 8.0 ozf)	1.28

[N/A] PROJECT DOES NOT FALL UNDER THIS CATEGORY

5.303.4 COMMERCIAL KITCHEN EQUIPMENT.

5.303.4.1 Food Waste Disposers. Disposers shall either modulate the use of water to no more than 1 gpm when the disposer is not in use (not actively grinding food waste/no-load) or shall automatically shut off after no more than 10 minutes of inactivity. Disposers shall use no more than 8 gpm of water.
Note: This code section does not affect local jurisdiction authority to prohibit or require disposer installation.

5.303.5 AREAS OF ADDITION OR ALTERATION. For those occupancies within the authority of the California Building Standards Commission as specified in Section 103, the provisions of Section 5.303.3 and 5.303.4 shall apply to new fixtures in additions or areas of alteration to the building.

5.303.6 STANDARDS FOR PLUMBING FIXTURES AND FITTINGS. Plumbing fixtures and fittings shall be installed in accordance with the *California Plumbing Code*, and shall meet the applicable standards referenced in Table 1701.1 of the *California Plumbing Code* and in Chapter 6 of this code.

[N/A] NO CHANGE TO LANDSCAPING

SECTION 5.304 OUTDOOR WATER USE

5.304.1 OUTDOOR POTABLE WATER USE IN LANDSCAPE AREAS. Nonresidential developments shall comply with a local water efficient landscape ordinance or the current California Department of Water Resources' Model Water Efficient Landscape Ordinance (MWELO), whichever is more stringent.

Notes:
1. The Model Water Efficient Landscape Ordinance (MWELO) is located in the California Code of Regulations, Title 23, Chapter 2.7, Division 2.
2. MWELO and supporting documents, including a water budget calculator, are available at: https://www.water.ca.gov/.

MANDATORY

[N/A] PROJECT DOES NOT FALL UNDER THIS CATEGORY

5.304.6 OUTDOOR POTABLE WATER USE IN LANDSCAPE AREAS. For public schools and community colleges, landscape projects as described in Sections 5.304.6.1 and 5.304.6.2 shall comply with the California Department of Water Resources Model Water Efficient Landscape Ordinance (MWELO) commencing with Section 490 of Chapter 2.7, Division 2, Title 23, *California Code of Regulations*, except that the evapotranspiration adjustment factor (ETAF) shall be 0.65 with an additional water allowance for special landscape areas (SLA) of 0.35.

Exception: Any project with an aggregate landscape area of 2,500 square feet or less may comply with the prescriptive measures contained in Appendix D of the MWELO.

5.304.6.1 Newly constructed landscapes. New construction projects with an aggregate landscape area equal to or greater than 500 square feet.

5.304.6.2 Rehabilitated landscapes. Rehabilitated landscape projects with an aggregate landscape area equal to or greater than 1,200 square feet.

DIVISION 5.4 MATERIAL CONSERVATION AND RESOURCE EFFICIENCY

SECTION 5.401 GENERAL

5.401.1 SCOPE. The provisions of this chapter shall outline means of achieving material conservation and resource efficiency through protection of buildings from exterior moisture, construction waste diversion, employment of techniques to reduce pollution through recycling of materials, and building commissioning or testing and adjusting.

SECTION 5.402 DEFINITIONS

5.402.1 DEFINITIONS. The following terms are defined in Chapter 2 *(and are included here for reference)*

ADJUST. To regulate fluid flow rate and air patterns at the terminal equipment, such as to reduce fan speed or adjust a damper.

BALANCE. To proportion flows within the distribution system, including sub-mains, branches and terminals, according to design quantities.

BUILDING COMMISSIONING. A systematic quality assurance process that spans the entire design and construction process, including verifying and documenting that building systems and components are planned, designed, installed, tested, operated and maintained to meet the owner's project requirements.

ORGANIC WASTE. Food waste, green waste, landscape and pruning wste, nonhazardous wood waste, and food soiled paper waste that is mixed in with food waste.

TEST. A procedure to determine quantitative performance of a system or equipment

[X] WEATHER RESISTANT FINISHES PROVIDED THROUGH OUT EXTERIOR.

SECTION 5.407 WATER RESISTANCE AND MOISTURE MANAGEMENT

5.407.1 WEATHER PROTECTION. Provide a weather-resistant exterior wall and foundation envelope as required by California Building Code Section 1402.2 (Weather Protection), manufacturer's installation instructions or local ordinance, whichever is more stringent.

5.407.2 MOISTURE CONTROL. Employ moisture control measures by the following methods.

5.407.2.1 Sprinklers. Design and maintain landscape irrigation systems to prevent spray on structures.

5.407.2.2 Entries and openings. Design exterior entries and/or openings subject to foot traffic or wind-driven rain to prevent water intrusion into buildings as follows:

5.407.2.2.1 Exterior door protection. Primary exterior entries shall be covered to prevent water intrusion by using nonabsorbent floor and wall finishes within at least 2 feet around and perpendicular to such openings plus at least one of the following:

1. An installed awning at least 4 feet in depth.
2. The door is protected by a roof overhang at least 4 feet in depth.
3. The door is recessed at least 4 feet.
4. Other methods which provide equivalent protection.

5.407.2.2.2 Flashing. Install flashings integrated with a drainage plane.

[ ] SEE SHEET G010, GREEN BUILDING REQUIREMENTS, NOTES A1-A4

CONTRACTOR TO FULFILL THIS REQUIREMENT ON SITE DURING CONSTRUCTION.

SECTION 5.408 CONSTRUCTION WASTE REDUCTION, DISPOSAL AND RECYCLING

5.408.1 CONSTRUCTION WASTE MANAGEMENT. Recycle and/or salvage for reuse a minimum of 65% of the non-hazardous construction and demolition waste in accordance with Section 5.408.1.1, 5.408.1.2 or 5.408.1.3; or meet a local construction and demolition waste management ordinance, whichever is more stringent.

5.408.1.1 Construction waste management plan. Where a local jurisdiction does not have a construction and demolition waste management ordinance, submit a construction waste management plan that:

1. Identifies the construction and demolition waste materials to be diverted from disposal by efficient usage, recycling, reuse on the project or salvage for future use or sale.
2. Determines if construction and demolition waste materials will be sorted on-site (source-separated) or bulk mixed (single stream).
3. Identifies diversion facilities where construction and demolition waste material collected will be taken.
4. Specifies that the amount of construction and demolition waste materials diverted shall be calculated by weight or volume, but not by both.

5.408.1.2 Waste Management Company. Utilize a waste management company that can provide verifiable documentation that the percentage of construction and demolition waste material diverted from the landfill complies with this section.

Note: The owner or contractor shall make the determination if the construction and demolition waste material will be diverted by a waste management company.

Exceptions to Sections 5.408.1.1 and 5.408.1.2:

1. Excavated soil and land-clearing debris.
2. Alternate waste reduction methods developed by working with local agencies if diversion or recycle facilities capable of compliance with this item do not exist.
3. Demolition waste meeting local ordinance or calculated in consideration of local recycling facilities and markets.

5.408.1.3 Waste stream reduction alternative. The combined weight of new construction disposal that does not exceed two pounds per square foot of building area may be deemed to meet the 65% minimum requirement as approved by the enforcing agency.

5.408.1.4 Documentation. Documentation shall be provided to the enforcing agency which demonstrates compliance with Sections 5.408.1.1, through 5.408.1.3. The waste management plan shall be updated as necessary and shall be accessible during construction for examination by the enforcing agency.

Notes:

1. Sample forms found in "A Guide to the California Green Building Standards Code (Nonresidential)" located www.dgs.ca.gov/BSC/Resources/Page-Content/Building-Standards-Commission-Resources-List-Folder/CALGreen may be used to assist in documenting compliance with the waste management plan.
2. Mixed construction and demolition debris processors can be located at the California Department of Resources Recycling and Recovery (CalRecycle).

[ ] SEE SHEET G010, GREEN BUILDING REQUIREMENTS, NOTE A5

CONTRACTOR TO FULFILL THIS REQUIREMENT ON SITE DURING CONSTRUCTION.

5.408.2 UNIVERSAL WASTE. [A] Additions and alterations to a building or tenant space that meet the scoping provisions in Section 301.3 for nonresidential additions and alterations, shall require verification that Universal Waste items such as fluorescent lamps and ballast and mercury containing thermostats as well as other California prohibited Universal Waste materials are disposed of properly and are diverted from landfills. A list of prohibited Universal Waste materials shall be included in the construction documents.

Note: Refer to the Universal Waste Rule link at: http://www.dtsc.ca.gov/universalwaste/

[ ] SEE SHEET G010, GREEN BUILDING REQUIREMENTS, NOTE A6

CONTRACTOR TO FULFILL THIS REQUIREMENT ON SITE DURING CONSTRUCTION.

5.408.3 EXCAVATED SOIL AND LAND CLEARING DEBRIS. 100 percent of trees, stumps, rocks and associated vegetation and soils resulting primarily from land clearing shall be reused or recycled. For a phased project, such material may be stockpiled on site until the storage site is developed.

Exception: Reuse, either on or off-site, of vegetation or soil contaminated by disease or pest infestation.

Notes:

1. If contamination by disease or pest infestation is suspected, contact the County Agricultural Commissioner and follow its direction for recycling or disposal of the material.
2. For a map of know pest and/or disease quarantine zones, consult with the California Department of Food and Agriculture. (www.cdfa.ca.gov)

[X] EXISTING ON-CAMPUS RECYCLING CENTER TO BE UTILIZED

SECTION 5.410 BUILDING MAINTENANCE AND OPERATIONS

5.410.1 RECYCLING BY OCCUPANTS. Provide readily accessible areas that serve the entire building and are identified for the depositing, storage and collection of non-hazardous materials for recycling, including (at a minimum) paper, corrugated cardboard, glass, plastics, organic waste, and metals or meet a lawfully enacted local recycling ordinance, if more restrictive.

Exception: Rural jurisdictions that meet and apply for the exemption in Public Resources Code 42649.82 (a)(2)(A) et seq. shall also be exempt from the organic waste portion of this section.

5.410.1.1 Additions. All additions conducted within a 12-month period under single or multiple permits, resulting in an increase of 30% or more in floor area, shall provide recycling areas on site.

Exception: Additions within a tenant space resulting in less than a 30% increase in the tenant space floor area.

5.410.1.2 Sample ordinance. Space allocation for recycling areas shall comply with Chapter 18, Part 3, Division 30 of the *Public Resources Code*. Chapter 18 is known as the California Solid Waste Reuse and Recycling Access Act of 1991 (Act).

Note: A sample ordinance for use by local agencies may be found in Appendix A of the document at the CalRecycle's web site.

MANDATORY

[N/A] EXISTING BLDG.

5.410.2 COMMISSIONING. [N] New buildings 10,000 square feet and over. For new buildings 10,000 square feet and over, building commissioning shall be included in the design and construction processes of the building project to verify that the building systems and components meet the owner's or owner representative's project requirements. Commissioning shall be performed in accordance with this section by trained personnel with experience on projects of comparable size and complexity. For I-occupancies that are not regulated by OSHPD or for I-occupancies and L-occupancies that are not regulated y the California Energy Code Section 100.0 Scope, all requirements in Sections 5.410.2 through 5.410.2.6 shall apply.

Note: For energy-related systems under the scope (Section 100) of the California Energy Code, including heating, ventilation, air conditioning (HVAC) systems and controls, indoor lighting systems and controls, as well as water heating systems and controls, refer to California Energy Code Section 120.8 for commissioning requirements

Commissioning requirements shall include:

1. Owner's or Owner representative's project requirements.
2. Basis of design.
3. Commissioning measures shown in the construction documents.
4. Commissioning plan.
5. Functional performance testing.
6. Documentation and training.
7. Commissioning report.

Exceptions:

1. Unconditioned warehouses of any size.
2. Areas less than 10,000 square feet used for offices or other conditioned accessory spaces within unconditioned warehouses.
3. Tenant improvements less than 10,000 square feet as described in Section 303.1.1.
4. Open parking garages of any size, or open parking garage areas, of any size, within a structure.

Note: For the purposes of this section, unconditioned shall mean a building, area, or room which does not provide heating and or air conditioning.

Informational Notes:

1. IAS AC 476 is an accreditation criteria for organizations providing training and/or certification of commissioning personnel. AC 476 is available to the Authority Having Jurisdiction as a reference for qualifications of commissioning personnel. AC 476 des not certify individuals to conduct functional performance tests or to adjust and balance systems.

2. Functional performance testing for heating, ventilation, air conditioning systems and lighting controls must be performed in compliance with the *California Energy Code*.

[ ] CONTRACTOR TO FULFILL REQUIREMENTS OF THIS SECTION PRIOR TO DESIGN PHASE OF PROJECT.

5.410.2.1 Owner's or Owner Representative's Project Requirements (OPR). [N] The expectations and requirements of the building appropriate to its phase shall be documented before the design phase of the project begins. This documentation shall include the following:
1. Environmental and sustainability goals.
2. Building sustainable goals.
3. Indoor environmental quality requirements.
4. Project program, including facility functions and hours of operation, and need for after hours operation.
5. Equipment and systems expectations.
6. Building occupant and operation and maintenance (O&M) personnel expectations.

5.410.2.2 Basis of Design (BOD). [N] A written explanation of how the design of the building systems meets the OPR shall be completed at the design phase of the building project. The Basis of Design document shall cover the following systems:

1. Renewable energy systems.
2. Landscape irrigation systems.
3. Water reuse system.

5.410.2.3 Commissioning plan. [N] Prior to permit issuance a commissioning plan shall be completed to document how the project will be commissioned. The commissioning plan shall include the following:
1. General project information.
2. Commissioning goals.
3. Systems to be commissioned. Plans to test systems and components shall include:
   a. An explanation of the original design intent.
   b. Equipment and systems to be tested, including the extent of tests.
   c. Functions to be tested.
   d. Conditions under which the test shall be performed.
   e. Measurable criteria for acceptable performance.
4. Commissioning team information.
5. Commissioning process activities, schedules and responsibilities. Plans for the completion of commissioning shall be included.

5.410.2.4 Functional performance testing. [N] Functional performance tests shall demonstrate the correct installation and operation of each component, system and system-to-system interface in accordance with the approved plans and specifications. Functional performance testing reports shall contain information addressing each of the building components tested, the testing methods utilized, and include any readings and adjustments made.

5.410.2.5 Documentation and training. [N] A Systems Manual and Systems Operations Training are required, including Occupational Safety and Health Act (OSHA) requirements in *California Code of Regulations* (CCR), Title 8, Section 5142, and other related regulations.

5.410.2.5.1 Systems manual. [N] Documentation of the operational aspects of the building shall be completed within the systems manual and delivered to the building owner or representative. The systems manual shall include the following:
1. Site information, including facility description, history and current requirements.
2. Site contact information.
3. Basic operations and maintenance, including general site operating procedures, basic troubleshooting, recommended maintenance requirements, site events log.
4. Major systems.
5. Site equipment inventory and maintenance notes.
6. A copy of verifications required by the enforcing agency or this code.
7. Other resources and documentation, if applicable.

5.410.2.5.2 Systems operations training. [N] A program for training of the appropriate maintenance staff for each equipment type and/or system shall be developed and documented in the commissioning report and shall include the following:
1. System/equipment overview (what it is, what it does and with what other systems and/or equipment it interfaces).
2. Review and demonstration of servicing/preventive maintenance.
3. Review of the information in the Systems Manual.
4. Review of the record drawings on the system/equipment.

5.410.2.6 Commissioning report. [N] A report of commissioning process activities undertaken through the design and construction phases of the building project shall be completed and provided to the owner or representative.

[ ] SEE SHEET G010 GREEN BUILDING REQUIREMENTS, NOTES C1-C4

CONTRACTOR TO FULFILL THIS REQUIREMENT ON SITE DURING CONSTRUCTION.

5.410.4 TESTING AND ADJUSTING. New buildings less than 10,000 square feet. Testing and adjusting of systems shall be required for new buildings less than 10,000 square feet or new systems to serve an addition or alteration subject to Section 303.1.

5.410.4.2 (Reserved)

Note: For energy-related systems under the scope (Section 100) of the California Energy Code, including heating, ventilation, air conditioning (HVAC) systems and controls, indoor lighting system and controls, as well as water heating systems and controls, refer to California Energy Code Section 120.8 for commissioning requirements and Sections 120.5, 120.6, 130.4, and 140.9(b)3 for additional testing requirements of specific systems.

5.410.4.2 Systems. Develop a written plan of procedures for testing and adjusting systems. Systems to be included for testing and adjusting shall include at a minimum, as applicable to the project:

1. Renewable energy systems.
2. Landscape irrigation systems.
3. Water reuse systems.

5.410.4.3 Procedures. Perform testing and adjusting procedures in accordance with manufacturer's specifications and applicable standards on each system.

5.410.4.3.1 HVAC balancing. In addition to testing and adjusting, before a new space-conditioning system serving a building or space is operated for normal use, the system shall be balanced in accordance with the procedures defined by the Testing Adjusting and Balancing Bureau National Standards; the National Environmental Balancing Bureau Procedural Standards; Associated Air Balance Council National Standards or as approved by the enforcing agency.

5.410.4.4 Reporting. After completion of testing, adjusting and balancing, provide a final report of testing signed by the individual responsible for performing these services.

5.410.4.5 Operation and maintenance (O & M) manual. Provide the building owner or representative with detailed operating and maintenance instructions and copies of guaranties/warranties for each system. O & M instructions shall be consistent with OSHA requirements in CCR, Title 8, Section 5142, and other related regulations.

5.410.4.5.1 Inspections and reports. Include a copy of all inspection verifications and reports required by the enforcing agency.

DIVISION 5.5 ENVIRONMENTAL QUALITY

SECTION 5.501 GENERAL

5.501.1 SCOPE. The provisions of this chapter shall outline means of reducing the quantity of air contaminants that are odorous, irritating, and/or harmful to the comfort and well-being of a building's installers, occupants and neighbors.

MANDATORY

SECTION 5.502 DEFINITIONS

5.502.1 DEFINITIONS. The following terms are defined in Chapter 2 *(and are included here for reference)*

ARTERIAL HIGHWAY. A general term denoting a highway primarily for through traffic usually on a continuous route.

A-WEIGHTED SOUND LEVEL (dBA). The sound pressure level in decibels as measured on a sound level meter using the internationally standardized A-weighting filter or as computed from sound spectral data to which A-weighting adjustments have been made.

1 BTU/HOUR. British thermal units per hour, also referred to as Btu. The amount of heat required to raise one pound of water one degree Fahrenheit per hour, a common measure of heat transfer rate. A ton of refrigeration is 12,000 Btu, the amount of heat required to melt a ton (2,000 pounds) of ice at 32^0 Fahrenheit.

COMMUNITY NOISE EQUIVALENT LEVEL (CNEL). A metric similar to the day-night average sound level (Ldn), except that a 5 decibel adjustment is added to the equivalent continuous sound exposure level for evening hours (7pm to 10pm) in addition to the 10 dB nighttime adjustment used in the Ldn.

COMPOSITE WOOD PRODUCTS. Composite wood products include hardwood plywood, particleboard and medium density fiberboard. "Composite wood products" does not include hardboard, structural plywood, structural panels, structural composite lumber, oriented strand board, glued laminated timber, timber, prefabricated wood I–joists or finger–jointed lumber, all as specified in California Code of Regulations (CCR), Title 17, Section 93120.1(a).

Note: See CCR, Title 17, Section 93120.1.

DAY-NIGHT AVERAGE SOUND LEVEL (Ldn). The A-weighted equivalent continuous sound exposure level for a 24-hour period with a 10 dB adjustment added to sound levels occurring during nighttime hours (10p.m. to 7 a.m.).

DECIBEL (db). A measure on a logarithmic scale of the magnitude of a particular quantity (such as sound pressure, sound power, sound intensity) with respect to a reference quantity.

ELECTRIC VEHICLE (EV). An automotive-type vehicle for on-road use, such as passenger automobiles, buses, trucks, vans, neighborhood electric vehicles, electric motorcycles, and the like, primarily powered by an electric motor that draws current from a rechargeable storage battery, fuel cell, photovoltaic array, or other source of electric current. Plug-in hybrid electric vehicles (PHEV) are considered electric vehicles. For purposes of the *California Electrical Code*, off-road, self-propoelled electric vehicles, such as industrial trucks, hoists, lifts, transports, golf carts, airline ground support equipment, tractors, boats, and the like, are not included.

ELECTRIC VEHICLE CHARGING STATION(S) (EVCSj). One or more spaces intended for charging electric vehicles.

ELECTRIC VEHICLE SUPPLY EQUIPMENT (EVSE). The conductors, including the ungrounded, grounded, and equipment grounding conductors and the electric vehicle connectors, attachment plugs, and all other fittings, devices, power outlets, or apparatus installed specifically for the purpose of transferring energy between the premises wiring and the electric vehicle.

ENERGY EQUIVALENT (NOISE) LEVEL (Leq). The level of a steady noise which would have the same energy as the fluctuating noise level integrated over the time of period of interest.

EXPRESSWAY. An arterial highway for through traffic which may have partial control of access, but which may or may not be divided or have grade separations at intersections.

FREEWAY. A divided arterial highway with full control of access and with grade separations at intersections.

GLOBAL WARMING POTENTIAL (GWP). The radiative forcing impact of one mass-based unit of a given greenhouse gas relative to an equivalent unit of carbon dioxide over a given period of time. Carbon dioxide is the reference compound with a GWP of one.

GLOBAL WARMING POTENTIAL VALUE (GWP VALUE). A 100-year GWP value published by the Intergovernmental Panel on Climate Change (IPCC) in either its Second Assessment Report (SAR) (IPCC, 1995); or its Fourth Assessment A-3 Report (AR4) (IPCC, 2007). The SAR GWP values are found in column "SAR (100-yr)" of Table 2.14.; the AR4 GWP values are found in column "100 yr" of Table 2.14.

HIGH-GWP REFRIGERANT. A compound used as a heat transfer fluid or gas that is: (a) a chlorofluorocarbon, a hdrochlorofluorocarbon, a hydrofluorocarbon, a perfluorocarbon, or any compound or blend of compounds, with a GWP value equal to or greater than 150, or (B) any ozone depleting substance as defined in Title 40 of the Code of Federal Regulations, Part 82, sec.82.3 (as amended March 10, 2009).

LONG RADIUS ELBOW. Pipe fitting installed between two lengths of pipe or tubing to allow a change of direction, with a radius 1.5 times the pipe diameter.

LOW-GWP REFRIGERANT. A compound used as a heat transfer fluid or gas that: (A) has a GWP value less than 150, and (B) is not an ozone depleting substance as defined in Title 40 of the Code of Federal Regulations, Part 82, sec.82.3 (as amended March 10, 2009).

MERV. Filter minimum efficiency reporting value, based on ASHRAE 52.2–1999.

MAXIMUM INCREMENTAL REACTIVITY (MIR). The maximum change in weight of ozone formed by adding a compound to the "Base REactive Organic Gas (ROG) Mixture" per weight of compound added, expressed to hundreths of a gram (g O^3/g ROC).

PRODUCT-WEIGHTED MIR (PWMIR). The sum of all weighted-MIR for all ingredients in a product subject to this article. The PWMIR is the total product reactivity expressed to hundredths of a gram of ozone formed per gram of product (excluding container and packaging).

PSIG. Pounds per square inch, guage.

REACTIVE ORGANIC COMPOUND (ROC). Any compound that has the potential, once emitted, to contribute to ozone formation in the troposphere.

SCHRADER ACCESS VALVES. Access fittings with a valve core installed.

SHORT RADIUS ELBOW. Pipe fitting installed between two lengths of pipe or tubing to allow a change of direction, with a radius 1.0 times the pipe diameter.

SUPERMARKET. For the purposes of Section 5.508.2, a supermarket is any retail food facility with 8,000 square feet or more conditioned area, and that utilizes either refrigerated display cases, or walk-in coolers or freezers connected to remote compressor units or condensing units.
VOC. A volatile organic compound broadly defined as a chemical compound based on carbon chains or rings with vapor pressures greater than 0.1 millimeters of mercury at room temperature. These compounds typically contain hydrogen and may contain oxygen, nitrogen and other elements. See CCR Title 17, Section 94508(a)

Note: Where specific regulations are cited from different agencies such as SCAQMD, ARB, etc., the VOC definition included in that specific regulation is the one that prevails for the specific measure in question.

[N/A] NO FIREPLACES OR WOOD STOVES

SECTION 5.503 FIREPLACES

5.503.1 FIREPLACES. Install only a direct-vent sealed-combustion gas or sealed wood-burning fireplace, or a sealed woodstove or pellet stove, and refer to residential requirements in the California Energy Code, Title 24, Part 6, Subchapter 7, Section 150. Woodstoves, pellet stoves and fireplaces shall comply with applicable local ordinances.

5.503.1.1 Woodstoves. Woodstoves and pellet stoves shall comply with U.S. EPA New Source Performance Standards (NSPS) emission limits as applicable, and shall have a permanent label indicating they are certified to meet the emission limits.

[N/A] HVAC SYSTEM NOT TO BE USED DURING CONSTRUCTION

SECTION 5.504 POLLUTANT CONTROL

5.504.1 TEMPORARY VENTILATION. The permanent HVAC system shall only be used during construction if necessary to condition the building or areas of addition or alteration within the required temperature range for material and equipment installation. If the HVAC system is used during construction, use return air filters with a Minimum Efficiency Reporting Value (MERV) of 8, based on ASHRAE 52.2-1999, or an average efficiency of 30% based on ASHRAE 52.1-1992 Replace all filters immediately prior to occupancy, or, if the building is occupied during alteration, at the conclusion of construction.

5.504.3 Covering of duct openings and protection of mechanical equipment during construction. At the time of rough installation and during storage on the construction site until final startup of the heating, cooling and ventilation equipment, all duct and other related air distribution component openings shall be covered with tape, plastic, sheet metal or other methods acceptable to the enforcing agency to reduce the amount of dust, water and debris which may enter the system.

Copyright © 2025

All ideas, designs, arrangements and plans indicated or represented by this drawing are owned by, and the property of, NICHOLS, MELBURG and ROSSETTO and were created, evolved and developed for use on, and in conjunction with, the specified project. None of such ideas, designs, arrangements or plans shall be used by, or disclosed to any person, firm or corporation for any purpose whatsoever without the written permission of NICHOLS, MELBURG and ROSSETTO.

NICHOLS MELBURG & ROSSETTO
ARCHITECTS + ENGINEERS
300 KNOLLCREST DRIVE
REDDING, CA. 96002
(530) 222-3300 (530) 222-3538 FAX
http://www.nmrdesign.com

CONSULTANTS

LICENSE STAMPS

LICENSED ARCHITECT
DEVEN CARTER
C 34730
REN. 5/31/27
STATE OF CALIFORNIA

PROJECT NAME

RENOVATION FOR

Humboldt County Animal Shelter

980 Lycoming Ave
McKinleyville, CA 95519

SHEET TITLE

CALGREEN 2022 NON-RESIDENTIAL MANDATORY MEASURES

DRAWING STATUS

CONSTRUCTION DOCUMENTS

BLDG. DEPT. SUBMITTAL

REVISIONS

Sym.	Description	Date

Drawn By	KAJ
Date Issued	04-03-2026
Scale	NTS
Project No.	17-6430

SHEET No.

G011

Login Name: Kurt_J
Plot Date: October 20, 2025 - 4:08 pm
File Name: S:\Projects\5000.COM\2025\25-5953 BBD Grand Prairie TI\7.0 Consult\7.0 Shell Arch\Drawing2.dwg
XREFS: x-AS-ttt

2022 CALIFORNIA GREEN BUILDING STANDARDS CODE NONRESIDENTIAL MANDATORY MEASURES

MANDATORY

X — SEE SHEET G010 GREEN BUILDING REQUIREMENTS, NOTES D1-D2

5.504.4 FINISH MATERIAL POLLUTANT CONTROL. Finish materials shall comply with Sections 5.504.4.1 through 5.504.4.6.

5.504.4.1 Adhesives, sealants and caulks. Adhesives, sealants, and caulks used on the project shall meet the requirements of the following standards:

1. Adhesives, adhesive bonding primers, adhesive primers, sealants, sealant primers and caulks shall comply with local or regional air pollution control or air quality management district rules where applicable, or SCAQMD Rule 1168 VOC limits, as shown in Tables 5.504.4.1 and 5.504.4.2. Such products also shall comply with the Rule 1168 prohibition on the use of certain toxic compounds (chloroform, ethylene dichloride, methylene chloride, perchloroethylene and trichloroethylene), except for aerosol products as specified in subsection 2, below.

2. Aerosol adhesives, and smaller unit sizes of adhesives, and sealant or caulking compounds (in units of product, less packaging, which do not weigh more than one pound and do not consist of more than 16 fluid ounces) shall comply with statewide VOC standards and other requirements, including prohibitions on use of certain toxic compounds, of *California Code of Regulations*, Title 17, commencing with Section 94507.

TABLE 5.504.4.1 - ADHESIVE VOC LIMIT[1,2]

Less Water and Less Exempt Compounds in Grams per Liter

ARCHITECTURAL APPLICATIONS	CURRENT VOC LIMIT
INDOOR CARPET ADHESIVES	50
CARPET PAD ADHESIVES	50
OUTDOOR CARPET ADHESIVES	150
WOOD FLOORING ADHESIVES	100
RUBBER FLOOR ADHESIVES	60
SUBFLOOR ADHESIVES	50
CERAMIC TILE ADHESIVES	65
VCT & ASPHALT TILE ADHESIVES	50
DRYWALL & PANEL ADHESIVES	50
COVE BASE ADHESIVES	50
MULTIPURPOSE CONSTRUCTION ADHESIVES	70
STRUCTURAL GLAZING ADHESIVES	100
SINGLE-PLY ROOF MEMBRANE ADHESIVES	250
OTHER ADHESIVES NOT SPECIFICALLY LISTED	50
SPECIALTY APPLICATIONS	
PVC WELDING	510
CPVC WELDING	490
ABS WELDING	325
PLASTIC CEMENT WELDING	250
ADHESIVE PRIMER FOR PLASTIC	550
CONTACT ADHESIVE	80
SPECIAL PURPOSE CONTACT ADHESIVE	250
STRUCTURAL WOOD MEMBER ADHESIVE	140
TOP & TRIM ADHESIVE	250
SUBSTRATE SPECIFIC APPLICATIONS	
METAL TO METAL	30
PLASTIC FOAMS	50
POROUS MATERIAL (EXCEPT WOOD)	50
WOOD	30
FIBERGLASS	80

1. IF AN ADHESIVE IS USED TO BOND DISSIMILAR SUBSTRATES TOGETHER, THE ADHESIVE WITH THE HIGHEST VOC CONTENT SHALL BE ALLOWED.

2. FOR ADDITIONAL INFORMATION REGARDING METHODS TO MEASURE THE VOC CONTENT SPECIFIED IN THIS TABLE, SEE SOUTH COAST AIR QUALITY MANAGEMENT DISTRICT RULE 1168, www.arb.ca.gov/DRDB/SC/CURHTML/R1168.PDF

TABLE 5.504.4.2 - SEALANT VOC LIMIT

Less Water and Less Exempt Compounds in Grams per Liter

SEALANTS	CURRENT VOC LIMIT
ARCHITECTURAL	250
MARINE DECK	760
NONMEMBRANE ROOF	300
ROADWAY	250
SINGLE-PLY ROOF MEMBRANE	450
OTHER	420
SEALANT PRIMERS	
ARCHITECTURAL	
NONPOROUS	250
POROUS	775
MODIFIED BITUMINOUS	500
MARINE DECK	760
OTHER	750

NOTE: FOR ADDITIONAL INFORMATION REGARDING METHODS TO MEASURE THE VOC CONTENT SPECIFIED IN THESE TABLES, SEE SOUTH COAST AIR QUALITY MANAGEMENT DISTRICT RULE 1168.

X — SEE SHEET G010 GREEN BUILDING REQUIREMENTS, NOTE D3

5.504.4.3 Paints and coatings. Architectural paints and coatings shall comply with VOC limits in Table 1 of the ARB Architectural Coatings Suggested Control Measure, as shown in Table 5.504.4.3, unless more stringent local limits apply. The VOC content limit for coatings that do not meet the definitions for the specialty coatings categories listed in Table 5.504.4.3 shall be determined by classifying the coating as a Flat, Nonflat or Nonflat-High Gloss coating, based on its gloss, as defined in Subsections 4.21, 4.36 and 4.37 of the 2007 California Air Resources Board Suggested Control Measure, and the corresponding Flat, Nonflat or Nonflat-High Gloss VOC limit in Table 5.504.4.3 shall apply.

5.504.4.3.1 Aerosol Paints and coatings. Aerosol paints and coatings shall meet the PWMIR Limits for ROC in Section 94522(a)(3) and other requirements, including prohibitions on use of certain toxic compounds and ozone depleting substances, in Sections 94522(c)(2) and (d)(2) of *California Code of Regulations*, Title 17, commencing with Section 94520; and in areas under the jurisdiction of the Bay Area Air Quality Management District additionally comply with the percent VOC by weight of product limits of Regulation 8 Rule 49.

TABLE 5.504.4.3 - VOC CONTENT LIMITS FOR ARCHITECTURAL COATINGS[2,3]

GRAMS OF VOC PER LITER OF COATING, LESS WATER & LESS EXEMPT COMPOUNDS

COATING CATEGORY	CURRENT VOC LIMIT
FLAT COATINGS	50
NONFLAT COATINGS	100
NONFLAT HIGH GLOSS COATINGS	150

MANDATORY

TABLE 5.504.4.3 - CONT.

GRAMS OF VOC PER LITER OF COATING, LESS WATER & LESS EXEMPT COMPOUNDS

COATING CATEGORY	CURRENT VOC LIMIT
SPECIALTY COATINGS	
ALUMINUM ROOF COATINGS	400
BASEMENT SPECIALTY COATINGS	400
BITUMINOUS ROOF COATINGS	50
BITUMINOUS ROOF PRIMERS	350
BOND BREAKERS	350
CONCRETE CURING COMPOUNDS	350
CONCRETE/MASONRY SEALERS	100
DRIVEWAY SEALERS	50
DRY FOG COATINGS	150
FAUX FINISHING COATINGS	350
FIRE RESISTIVE COATINGS	350
FLOOR COATINGS	100
FORM-RELEASE COMPOUNDS	250
GRAPHIC ARTS COATINGS (SIGN PAINTS)	500
HIGH-TEMPERATURE COATINGS	420
INDUSTRIAL MAINTENANCE COATINGS	250
LOW SOLIDS COATINGS[1]	120
MAGNESITE CEMENT COATINGS	450
MASTIC TEXTURE COATINGS	100
METALLIC PIGMENTED COATINGS	500
MULTICOLOR COATINGS	250
PRETREATMENT WASH PRIMERS	420
PRIMERS, SEALERS, & UNDERCOATERS	100
REACTIVE PENETRATING SEALERS	350
RECYCLED COATINGS	250
ROOF COATINGS	50
RUST PREVENTATIVE COATINGS	250
SHELLACS:	
CLEAR	730
OPAQUE	550
SPECIALTY PRIMERS, SEALERS & UNDERCOATERS	100
STAINS	250
STONE CONSOLIDANTS	450
SWIMMING POOL COATINGS	340
TRAFFIC MARKING COATINGS	100
TUB & TILE REFINISH COATINGS	420
WATERPROOFING MEMBRANES	250
WOOD COATINGS	275
WOOD PRESERVATIVES	350
ZINC-RICH PRIMERS	340

1. GRAMS OF VOC PER LITER OF COATING, INCLUDING WATER & EXEMPT COMPOUNDS

2. THE SPECIFIED LIMITS REMAIN IN EFFECT UNLESS REVISED LIMITS ARE LISTED IN SUBSEQUENT COLUMNS IN THE TABLE.

3. VALUES IN THIS TABLE ARE DERIVED FROM THOSE SPECIFIED BY THE CALIFORNIA AIR RESOURCES BOARD, ARCHITECTURAL COATINGS SUGGESTED CONTROL MEASURE, FEB. 1, 2008. MORE INFORMATION IS AVAILABLE FROM THE AIR RESOURCES BOARD.

5.504.4.3.2 Verification. Verification of compliance with this section shall be provided at the request of the enforcing agency. Documentation may include, but is not limited to, the following:
1. Manufacturer's product specification
2. Field verification of on-site product containers

X — SEE SHEET G010 GREEN BUILDING REQUIREMENTS, NOTE D4

5.504.4.4 Carpet Systems.
All carpet installed in the building interior shall meet the requirements of the California Department of Public Health, "Standard Method for the Testing and Evaluation of Volatile Organic Chemical Emissions from Indoor Sources Using Environmental Chambers." Version 1.2, January 2017 (Emission testing method for California Specifications 01350).

See California Department of Public Health's website for certification programs and testing labs.
https://www.cdph.ca.gov/Programs/CCDPHP/DEODC/EHLB/IAQ/Pages/VOC.aspx#material

5.504.4.4.1 Carpet cushion. All carpet cushion installed in the building interior shall meet the requirements of the California Department of Public Health,"Standard Method for the Testing and Evaluation of Volatile Organic Chemical Emissions from Indoor Sources Using Environmental Chambers,"Version 1.2, January 2017 (Emission testing method for California Specifications 01350).

See California Department of Public Health's website for certification programs and testing labs.
https://www.cdph.ca.gov/Programs/CCDPHP/DEODC/EHLB/IAQ/Pages/VOC.aspx#material

5.504.4.4.2 Carpet adhesive. All carpet adhesive shall meet the requirements of Table 5.504.4.1.

X — SEE SHEET G010 GREEN BUILDING REQUIREMENTS, NOTE D5

5.504.4.5 Composite wood products. Hardwood plywood, particleboard and medium density fiberboard composite wood products used on the interior or exterior of the buildings shall meet the requirements for formaldehyde as specified in ARB's Air Toxics Control Measure (ATCM) for Composite Wood (17 CCR 93120 et seq.). Those materials not exempted under the ATCM must meet the specified emission limits, as shown in Table 5.504.4.5.

5.504.4.5.3 Documentation. Verification of compliance with this section shall be provided as requested by the enforcing agency. Documentation shall include at least one of the following:
1. Product certifications and specifications.
2. Chain of custody certifications.
3. Product labeled and invoiced as meeting the Composite Wood Products regulation (see CR, Title 17, Section 93120, et seq.).
4. Exterior grade products marked as meeting the PS-1 or PS-2 standards of the Engineered Wood Association, the Australian AS/NZS 2269 or European 636 3S standards.
5. Other methods acceptable to the enforcing agency.

TABLE 5.504.4.5 - FORMALDEHYDE LIMITS[1]

MAXIMUM FORMALDEHYDE EMISSIONS IN PARTS PER MILLION

PRODUCT	CURRENT LIMIT
HARDWOOD PLYWOOD VENEER CORE	0.05
HARDWOOD PLYWOOD COMPOSITE CORE	0.05
PARTICLE BOARD	0.09
MEDIUM DENSITY FIBERBOARD	0.11
THIN MEDIUM DENSITY FIBERBOARD[2]	0.13

1. VALUES IN THIS TABLE ARE DERIVED FROM THOSE SPECIFIED BY THE CALIFORNIA AIR RESOURCES BOARD, AIR TOXICS CONTROL MEASURE FOR COMPOSITE WOOD AS TESTED IN ACCORDANCE WITH ASTM E 1333. FOR ADDITIONAL INFORMATION, SEE CALIFORNIA CODE OF REGULATIONS, TITLE 17, SECTIONS 93120 THROUGH 93120.12.

2. THIN MEDIUM DENSITY FIBERBOARD HAS A MAXIMUM THICKNESS OF 5/16 INCHES (8 MM).

MANDATORY

X — SEE SHEET G010 GREEN BUILDING REQUIREMENTS, NOTE D6

5.504.4.6 Resilient flooring systems. Where resilient flooring is installed, at least 80 percent of floor area receiving resilient flooring shall meet the requirements of the California Department of Public Health,"Standard Method for the Testing and Evaluation of Volatile Organic Chemical Emissions from Indoor Sources Using Environmental Chambers," Version 1.2, January 2017 (Emission testing method for California Specifications 01350)

See California Department of Public Health's website for certification programs and testing labs.
https://www.cdph.ca.gov/Programs/CCDPHP/DEODC/EHLB/IAQ/Pages/VOC.aspx#material

5.504.4.6.1 Verification of compliance. Documentation shall be provided verifying that resilient flooring materials meet the pollutant emission limits.

5.504.4.7 Thermal insulation
Comply with the requirements of the California Department of Public Health, "Standard Method of the Testing and Evaluation of Volatile Organic Chemical Emissions from Indoor Sources Using Environmental Chambers, "Version 1.2, January 1.2, January 2017 (Emission testing method for California Specification 01350). See California Department of Public Health's website for certification programs and testing labs. https://www.cdph.ca.gov/Programs/CCDPHP/DEODC/EHLB/IAQ/Pages/VOC.aspx#material

5.504.4.7.1 Verification of compliance.
Documentation shall be provided verifying that thermal insulation materials meet the pollutant emission limits.

5.504.4.8 Acoustical ceiling and wall panels.
Comply with the requirements of the California Department of Public Health, "Standard Method for the Testing and Evaluation of Volatile Organic Chemical Emissions from Indoor Sources Using Environmental Chambers, " Version 1.2, January 2017 (Emission testing method for California Specification 01350). See California Department of Public Health's website for certification programs and testing labs.

5.504.4.8.1 Verification of compliance. Documentation shall be provided verifying that acoustical finish materials meet the pollutant emission limits.

N/A — NO CHANGE TO MECHANICAL SYSTEMS

5.504.5.3 Filters. In mechanically ventilated buildings, provide regularly occupied areas of the building with air filtration media for outside and return air that provides at least a Minimum Efficiency Reporting Value (MERV) of 13. MERV 13 filters shall be installed prior to occupancy, and recommendations for maintenance with filters of the same value shall be included in the operation and maintenance manual.

Exceptions: Existing mechanical equipment.

5.504.5.3.1 Labeling. Installed filters shall be clearly labeled by the manufacturer indicating the MERV rating.

N/A — NO CHANGE TO MECHANICAL SYSTEMS

5.504.7 ENVIRONMENTAL TOBACCO SMOKE (ETS) CONTROL. Where outdoor areas are provided for smoking, prohibit smoking within 25 feet of building entries, outdoor air intakes and operable windows and within the building as already prohibited by other laws or regulations; or as enforced by ordinances, regulations or policies of any city, county, city and county, California Community College, campus of the California State University, or campus of the University of California, whichever are more stringent. When ordinances, regulations or policies are not in place, post signage to inform building occupants of the prohibitions.

N/A — NO CHANGE TO MECHANICAL SYSTEMS

SECTION 5.505 INDOOR MOISTURE CONTROL

5.505.1 INDOOR MOISTURE CONTROL. Buildings shall meet or exceed the provisions of California Building Code, CCR, Title 24, Part 2, Sections 1202 (Ventilation) and Chapter 14 (Exterior Walls). For additional measures, see Section 5.407.2 of this code.

N/A — NO CHANGE TO MECHANICAL SYSTEMS

SECTION 5.506 INDOOR AIR QUALITY

5.506.1 OUTSIDE AIR DELIVERY. For mechanically or naturally ventilated spaces in buildings, meet the minimum requirements of Section 120.1 (Requirements For Ventilation) of the *California Energy Code*, or the applicable local code, whichever is more stringent, and Division 1, Chapter 4 of CCR, Title 8.

5.506.2 CARBON DIOXIDE (CO_2) MONITORING. For buildings or additions equipped with demand control ventilation, CO_2 sensors and ventilation controls shall be specified and installed in accordance with the requirements of the California Energy Code, Section 120(c)(4).

5.506.3 Carbon dioxide (CO2) monitoring in classrooms.
(DSA-SS) Each public K-12 school classroom, as listed in Table 120.1-A of the *California Energy Code,* shall be equipped with a carbon dioxide monitor or sensor that meets the following requirements:
1. The monitor or sensor shall be permanently affixed in a tamper-proof manner in each classroom between 3 and 6 feet (914 mm and 1829 mm) above the floor and at least 5 feet (1524 mm) away from door and operable windows.
2. When the monitor or sensor is not integral to an Energy Management Control System (EMCS), the monitor or sensor shall display the carbon dioxide readings on the device. When the sensor is integral to an EMCS, the carbon dioxide readings shall be available to and regularly monitored by facility personnel.
3. A monitor shall provide notification though a visual indicator on the monitor when the carbon dioxide levels in the classroom have exceeded 1,100ppm. A sensor integral to an EMCS shall provide notification to facility personnel through a visual and/or audible indicator when the carbon dioxide levels in the classroom have exceeded 1,100ppm.
4. The monitor or sensor shall measure carbon dioxide levels at minimum 15- minute intervals and shall maintain a record of previous carbon dioxide measurements of not less than 30 days duration.
5. The monitor or sensor used to measure carbon dioxide levels shall have the capacity to measure carbon dioxide levels with a range of 400ppm to 2000ppm or greater.
6. The monitor or sensor shall be certified by the manufacturer to be accurate within 75ppm at 1,000ppm carbon dioxide concentration and shall be certified by the manufacturer to require calibration no more frequently than once every 5 years.

N/A — DOES NOT APPLY

SECTION 5.507 ENVIRONMENTAL COMFORT

5.507.4 ACOUSTICAL CONTROL. Employ building assemblies and components with Sound Transmission Class (STC) values determined in accordance with ASTM E 90 and ASTM E 413, or Outdoor-Indoor Sound Transmission Class (OITC) determined in accordance with ASTM E 1332, using either the prescriptive or performance method in Section 5.507.4.1 or 5.507.4.2.

Exception: Buildings with few or no occupants or where occupants are not likely to be affected by exterior noise, as determined by the enforcement authority, such as factories, stadiums, storage, enclosed parking structures and utility buildings.

Exception: [DSA-SS] For public schools and community colleges, the requirements of this section and all subsections apply only to new construction.

5.507.4.1 Exterior noise transmission, prescriptive method. Wall and roof-ceiling assemblies exposed to the noise source making up the building or addition envelope or altered envelope shall meet a composite STC rating of at least 50 or a composite OITC rating of no less than 40, with exterior windows of a minimum STC of 40 or OITC of 30 in the following locations:

1. Within the 65 CNEL noise contour of an airport.

Exceptions:

1. L_{dn} or CNEL for military airports shall be determined by the facility Air Installation Compatible Land Use Zone (AICUZ) plan.
2. L_{dn} or CNEL for other airports and heliports for which a land use plan has not been developed shall be determined by the local general plan noise element.

2. Within the 65 CNEL or L_{dn} noise contour of a freeway or expressway, railroad, industrial source or fixed-guideway source as determined by the Noise Element of the General Plan.

5.507.4.1.1. Noise exposure where noise contours are not readily available. Buildings exposed to a noise level of 65 dB L_{eq} - 1-hr during any hour of operation shall have building, addition or alteration exterior wall and roof-ceiling assemblies exposed to the noise source meeting a composite STC rating of at least 45 (or OITC 35), with exterior windows of a minimum STC of 40 (or OITC 30).

5.507.4.2 Performance Method. For buildings located as defined in Section 5.507.4.1 or 5.507.4.1.1, wall and roof-ceiling assemblies exposed to the noise source making up the building or addition envelope or altered envelope shall be constructed to provide an interior noise environment attributable to exterior sources that does not exceed an hourly equivalent noise level (Leq-1Hr) of 50 dBA in occupied areas during any hour of operation.

5.507.4.2.1 Site Features. Exterior features such as sound walls or earth berms may be utilized as appropriate to the building, addition or alteration project to mitigate sound migration to the interior.

5.507.4.2.2 Documentation of Compliance. An acoustical analysis documenting complying interior sound levels shall be prepared by personnel approved by the architect or engineer of record.

5.507.4.3 Interior sound transmission. Wall and floor-ceiling assemblies separating tenant spaces and tenant spaces and public places shall have an STC of at least 40.

Note: Examples of assemblies and their various STC ratings may be found at the California Office of Noise Control: www.toolbase.org/PDF/CaseStudies/stc_icc_ratings.pdf.

N/A — NO CHANGE TO MECHANICAL SYSTEMS

SECTION 5.508 OUTDOOR AIR QUALITY

5.508.1 Ozone depletion and greenhouse gas reductions. Installations of HVAC, refrigeration and fire suppression equipment shall comply with Sections 5.508.1.1 and 5.508.1.2.

5.508.1.1 Chlorofluorocarbons (CFCs). Install HVAC, refrigeration and fire suppression equipment that do not contain CFCs.

5.508.1.2 Halons. Install HVAC, refrigeration and fire suppression equipment that do not contain Halons.

MANDATORY

N/A — PROJECT DOES NOT FALL UNDER THIS CATEGORY

5.508.2 Supermarket refrigerant leak reduction. New commercial refrigeration systems shall comply with the provisions of this section when installed in retail food stores 8,000 square feet or more conditioned area, and that utilize either refrigerated display cases, or walk-in coolers or freezers connected to remote compressor units or condensing units. The leak reduction measures apply to refrigeration systems containing high-global-warming potential (high-GWP) refrigerants with a GWP of 150 or greater. New refrigeration systems include both new facilities and the replacement of existing refrigeration systems in existing facilities.

Exception: Refrigeration systems containing low-global warming potential (low-GWP) refrigerant with a GWP value less than 150 are not subject to this section. Low-GWP refrigerants are nonozone-depleting refrigerants that include ammonia, carbon dioxide (CO_2), and potentially other refrigerants.

5.508.2.1 Refrigerant piping. Piping compliant with the California Mechanical Code shall be installed to be accessible for leak protection and repairs. Piping runs using threaded pipe, copper tubing with an outside diameter (OD) less than 1/4 inch, flared tubing connections and short radius elbows shall not be used in refrigerant systems except as noted below.

5.508.2.1.1 Threaded pipe. Threaded connections are permitted at the compressor rack.

5.508.2.1.2 Copper pipe. Copper tubing with an OD less than 1/4 inch may be used in systems with a refrigerant charge of 5 pounds or less.

5.508.2.1.2.1 Anchorage. One-fouth-inch OD tubing shall be securely clamped to a rigid base to keep vibration levels below 8 mils.

5.508.2.1.3 Flared tubing connections. Double-flared tubing connections may be used for pressure controls, valve pilot lines and oil.

Exception: Single-flared tubing connections may be used with a multiring seal coated with industrial sealant suitable for use with refrigerants and tightened in accordance with manufacturer's recommendations.

5.508.2.1.4 Elbows. Short radius elbows are only permitted where space limitations prohibit use of long radius elbows.

5.508.2.2 Valves. Valves Valves and fittings shall comply with the *California Mechanical Code* and as follows.

5.508.2.2.1 Pressure relief valves. For vessels containing high-GWP refrigerant, a rupture disc shall be installed between the outlet of the vessel and the inlet of the pressure relief valve.

5.508.2.2.1.1 Pressure detection. A pressure gauge, pressure transducer or other device shall be installed in the space between the rupture disc and the relief valve inlet to indicate a disc rupture or discharge of the relief valve.

5.508.2.2.2 Access valves. Only Schrader access valves with a brass or steel body are permitted for use.

5.508.2.2.2.1 Valve caps. For systems with a refrigerant charge of 5 pounds or more, valve caps shall be brass or steel and not plastic.

5.508.2.2.2.2 Seal caps. If designed for it, the cap shall have a neoprene O-ring in place.

5.508.2.2.2.2.1 Chain tethers. Chain tethers to fit ovr the stem are required for valves designed to have seal caps.

Exception: Valves with seal caps that are not removed from the valve during stem operation.

5.508.2.3 Refrigerated service cases. Refrigerated service cases holding food products containing vinegar and salt shall have evaporator coils of corrosion-resistant material, such as stainless steel; or be coated to prevent corrosion from these substances.

5.508.2.3.1 Coil coating. Consideration shall be given to the heat transfer efficiency of coil coating to maximize energy efficiency.

5.508.2.4 Refrigerant receivers. Refrigerant receivers with capacities greater than 200 pounds shall be fitted with a device tha indicates the level of refrigerant in the receiver.

5.508.2.5 Pressure testing. The system shall be pressure tested during installation prior to evacuation and charging.

5.508.2.5.1 Minimum pressure. The system shall be charged with regulated dry nitrogen and appropriate tracer gas to bring system pressure up to 300 psig minimum.

5.508.2.5.2 Leaks. Check the system for leaks, repair any leaks, and retest for pressure using the same gauge.

5.508.2.5.3 Allowable pressure change. The system shall stand, unaltered, for 24 hours with no more than a +/- one pound pressure change from 300 psig, measured with the same gauge.

5.508.2.6 Evacuation. The system shall be evacuated after pressure testing and prior to charging.

5.508.2.6.1 First vacuum. Pull a system vacuum down to at least 1000 microns (+/- 50 microns), and hold for 30 minutes.

5.508.2.6.2 Second vacuum. Pull a second system vacuum to a minimum of 500 microns and hold for 30 minutes.

5.508.2.6.3 Third vacuum. Pull a third vacuum down to a minimum of 300 microns, and hold for 24 hours with a maximum drift of 100 microns over a 24-hour period.

CHAPTER 7
INSTALLER & SPECIAL INSPECTOR QUALIFICATIONS

702 QUALIFICATIONS

702.1 INSTALLER TRAINING. HVAC system installers shall be trained and certified in the proper installation of HVAC systems including ducts and equipment by a nationally or regionally recognized training or certification program. Uncertified persons may perform HVAC installations when under the direct supervision and responsibility of a person trained and certified to install HVAC systems or contractor licensed to install HVAC systems. Examples of acceptable HVAC training and certification programs include but are not limited to the following:

1. State certified apprenticeship programs.
2. Public utility training programs.
3. Training programs sponsored by trade, labor or statewide energy consulting or verification organizations.
4. Programs sponsored by manufacturing organizations.
5. Other programs acceptable to the enforcing agency.

702.2 SPECIAL INSPECTION [HCD]. When required by the enforcing agency, the owner or the responsible entity acting as the owner's agent shall employ one or more special inspectors to provide inspection or other duties necessary to substantiate compliance with this code. Special inspectors shall demonstrate competence to the satisfaction of the enforcing agency for the particular type of inspection or task to be performed. In addition to other certifications or qualifications acceptable to the enforcing agency, the following certifications or education may be considered by the enforcing agency when evaluating the qualifications of a special inspector:

1. Certification by a national or regional green building program or standard publisher.
2. Certification by a statewide energy consulting or verification organization, such as HERS raters, building performance contractors, and home energy auditors.
3. Successful completion of a third party apprentice training program in the appropriate trade.
4. Other programs acceptable to the enforcing agency.

Notes:

1. Special inspectors shall be independent entities with no financial interest in the materials or the project they are inspecting for compliance with this code.
2. HERS raters are special inspectors certified by the California Energy Commission (CEC) to rate homes in California according to the Home Energy Rating System (HERS).

[BSC-CG] When required by the enforcing agency, the owner or the responsible entity acting as the owner's agent shall employ one or more special inspectors to provide inspection or other duties necessary to substantiate compliance with this code. Special inspectors shall demonstrate competence to the satisfaction of the enforcing agency for the particular type of inspection or task to be performed. In addition, the special inspector shall have a certification from a recognized state, national or international association, as determined by the local agency. The area of certification shall be closely related to the primary job function, as determined by the local agency.

Note: Special inspectors shall be independent entities with no financial interest in the materials or the project they are inspecting for compliance with this code.

703 VERIFICATIONS

703.1 DOCUMENTATION. Documentation used to show compliance with this code shall include but is not limited to, construction documents, plans, specifications, builder or installer certification, inspection reports, or other methods acceptable to the enforcing agency which demonstrate substantial conformance. When specific documentation or special inspection is necessary to verify compliance, that method of compliance will be specified in the appropriate section or identified applicable checklist.

Copyright © 2025

All ideas, designs, arrangements and plans indicated or represented by this drawing are owned by, and the property of, NICHOLS, MELBURG and ROSSETTO and were created, evolved and developed for use on, and in conjunction with, the specified project. None of such ideas, designs, arrangements or plans shall be used by, or disclosed to any person, firm or corporation for any purpose whatsoever without the written permission of NICHOLS, MELBURG and ROSSETTO.

NICHOLS MELBURG ROSSETTO
ARCHITECTS + ENGINEERS
300 KNOLLCREST DRIVE
REDDING, CA. 96002
(530) 222-3300 (530) 222-3538 FAX
http://www.nmrdesign.com

CONSULTANTS

LICENSE STAMPS

LICENSED ARCHITECT
DEVEN CARTER
C 34730
REN. 5/31/27
STATE OF CALIFORNIA

PROJECT NAME

RENOVATION FOR

Humboldt County Animal Shelter

980 Lycoming Ave
McKinleyville, CA 95519

SHEET TITLE

CALGREEN 2022 NON-RESIDENTIAL MANDATORY MEASURES

DRAWING STATUS

CONSTRUCTION DOCUMENTS

BLDG. DEPT. SUBMITTAL

REVISIONS

Sym.	Description	Date

Drawn By	KAJ
Date Issued	04-03-2026
Scale	NTS
Project No.	17-6430

SHEET No.

G012

Login Name: Kurt_J
Plot Date: October 20, 2025 - 4:08 pm
File Name: S:\Projects\5000.COM\2025\25-5953 BBD Grand Prairie TI\7.0 Consult\7.0 Shell Arch\Drawing2.dwg
XREFS: x-AS-ttt

Login Name: TimS
Plot Date: April 01, 2026 - 4:33 pm
File Name: N:\Projects\6000.Civic\2017\17-6430 Humboldt County ADA Compliance\15 Animal Shelter\10 DWGs\17-6430.15-G200-201_AS-ACCESS.dwg
XREFS: x-ttt

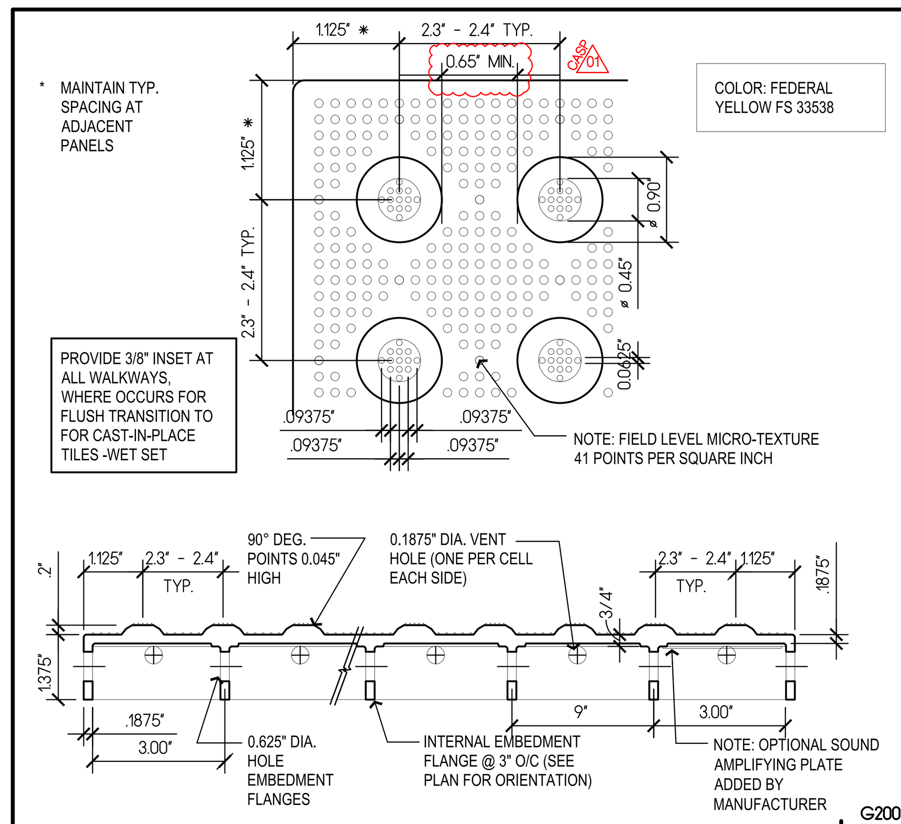

G200

DETECTABLE WARNING SURFACE / TRUNCATED DOMES - CAST-IN-PLACE

SCALE: 1 1/2"=1'-0"

9

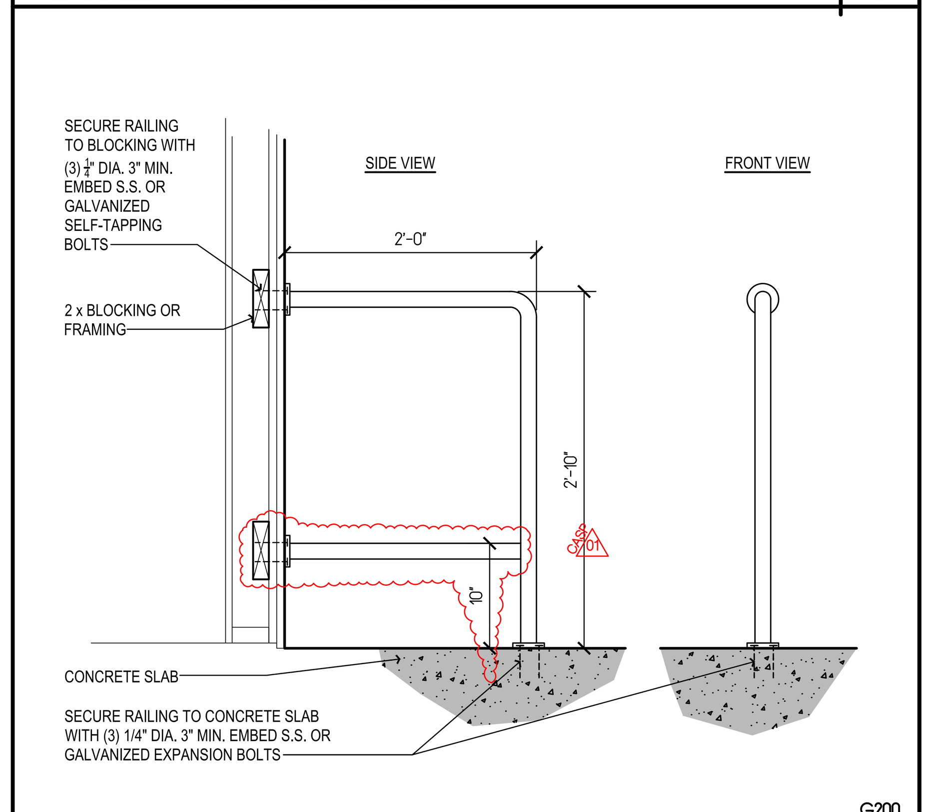

G200

DETECTABLE WARNING RAILING

SCALE: 1"=1'-0"

10

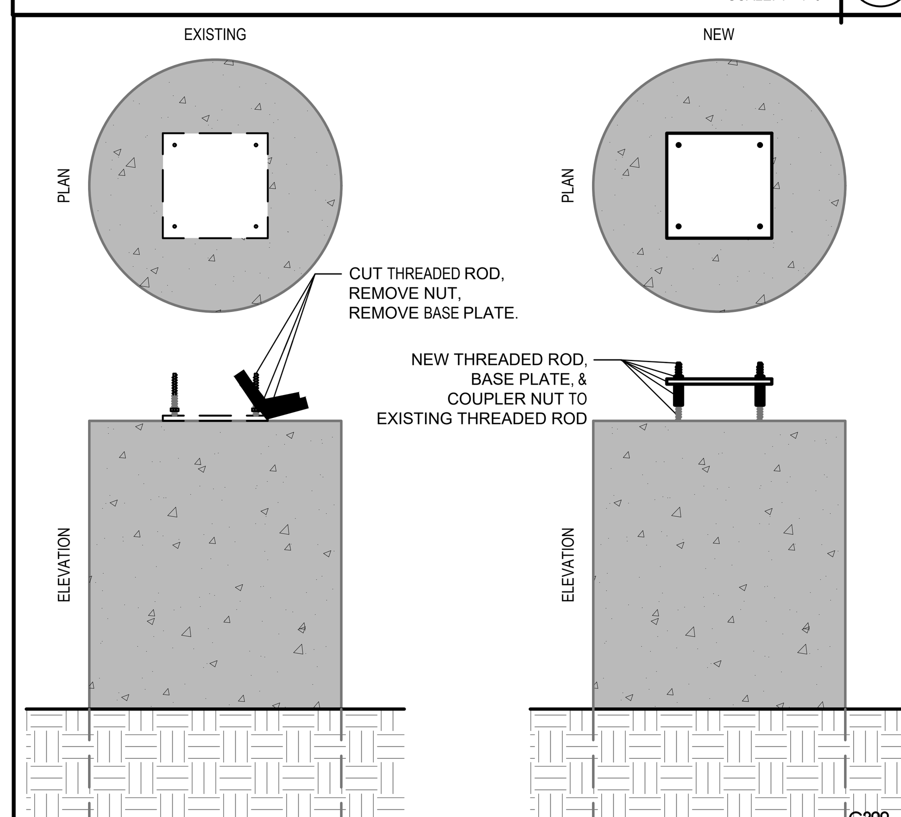

G200

CONCRETE LIGHT POLE BASE

SCALE: 1" = 1'-0"

11

Fire Lane Marking

California Vehicle Code:

22500.1. In addition to Section 22500, no person shall stop, park, or leave standing any vehicle, whether attended or unattended, except when necessary to avoid conflict with other traffic or in compliance with the directions of a peace officer or official traffic control device along the edge of any highway, at any curb or in any location in a publicly or privately owned or operated off-street parking facility, designated as a fire lane by the fire department or fire district with jurisdiction over the area in which the place is located.
The designation shall be indicated (1) by a sign posted immediately adjacent to, and visible from, the designated place clearly stating in letters not less than one inch in height that the place is a fire lane, (2) by outlining or painting the place with the words "FIRE LANE", which are clearly visible from a vehicle, or (3) by a red curb or red paint on the edge of the roadway upon which is clearly marked the words "FIRE LANE".

(In addition to the Vehicle Code requirements, the words "No Parking" should be added to reinforce that parking is not permitted.)

City Requirements for Fire Lanes:

Any portion of a structure in excess of 150 feet from the roadway will require an access lane with a minimum width of 20 feet. Access lanes and required turn-arounds less than 28 feet in width shall require posting "Fire Lane No Parking" on both sides. Lanes 28 feet to less than 32 feet shall be posted "Fire Lane No Parking" on one side. Access lanes shall be constructed of an approved all-weather surface and shall meet the minimum turning radii of 28 feet inside and 48 feet outside.

FIRE LANE MARKING OPTIONS:

1a. SQUARED CURB

FIRE LANE NO PARKING

Minimum 4" white letters by 3/4" stroke on the face of a red curb every 25 to 30 feet.

1b. ROLLED CURB

FIRE LANE NO PARKING

Minimum 4" white letters by 3/4" stroke on the face of a red curb every 25 to 30 feet.

2. NO CURB

FIRE LANE NO PARKING

Minimum 4" white letters by 3/4" stroke on the face of a red curb every 25 to 30 feet on a 6" red stripe painted on the pavement.

3. SIGNS

Shall be 12" wide and 18" long, made with minimum 1" red reflective letters on a white background.

Signs shall be placed at the beginning and end of the restricted area, visible from the direction of travel. Signs shall be identified as "begin" or "end" as needed with each change in restricted parking condition,

Additional signs may be required (spaced from 90 to 160 feet apart) depending upon visibility and terrain.

FIRE LANE NO PARKING

BEGIN or END

G200

FIRE LANE MARKING REQUIREMENTS

NOT TO SCALE

6

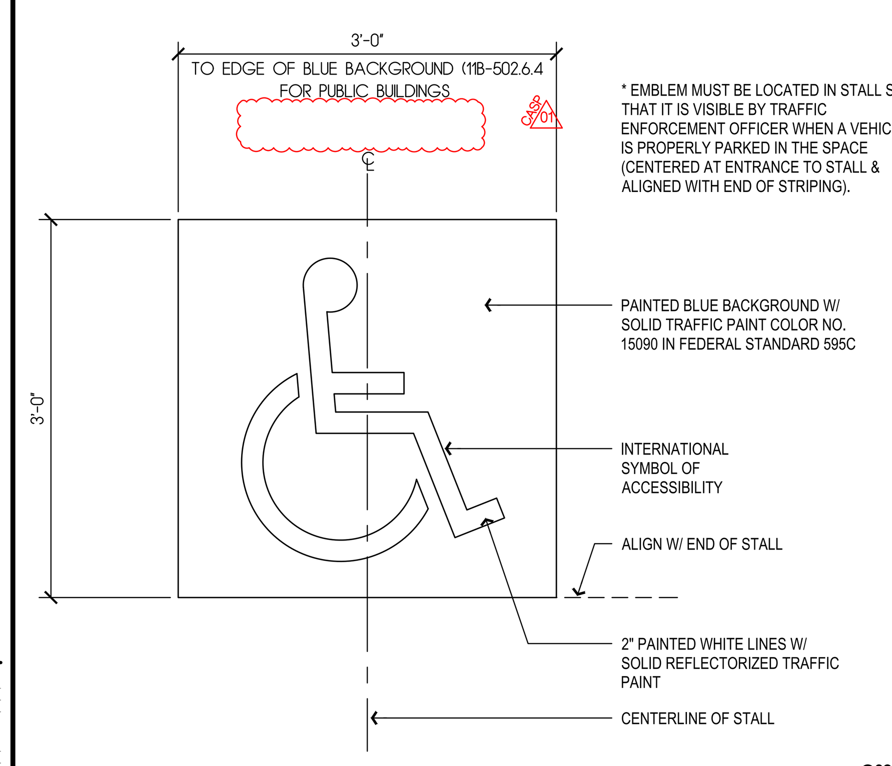

G200

ACCESSIBLE PARKING GRAPHIC

SCALE: 1"=1'-0"

7

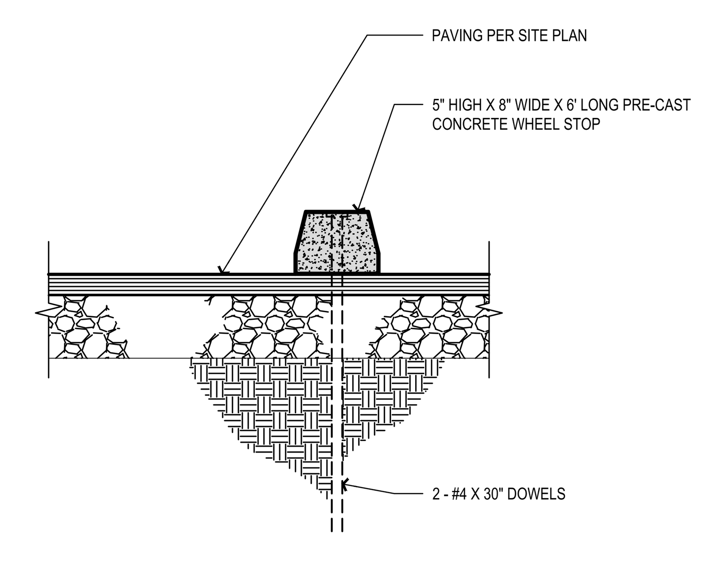

G200

TYPICAL CONCRETE WHEEL STOP

SCALE: 1"=1'-0"

8

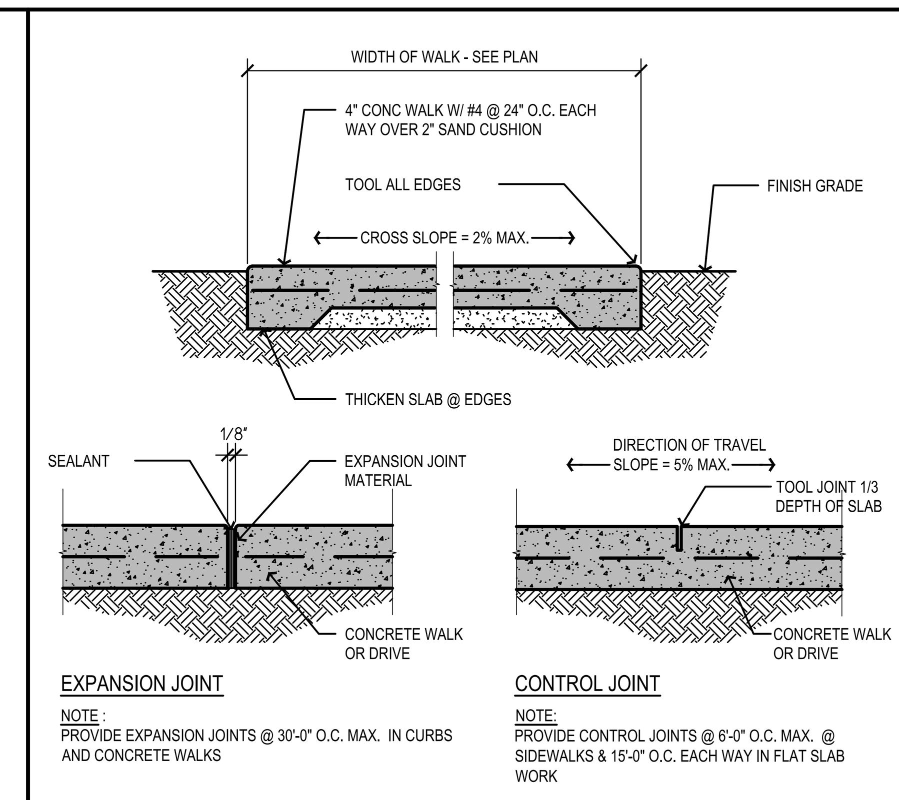

G200

CONCRETE WALK AND TYP. PAVING JOINTS

SCALE: 1"=1'-0"

1

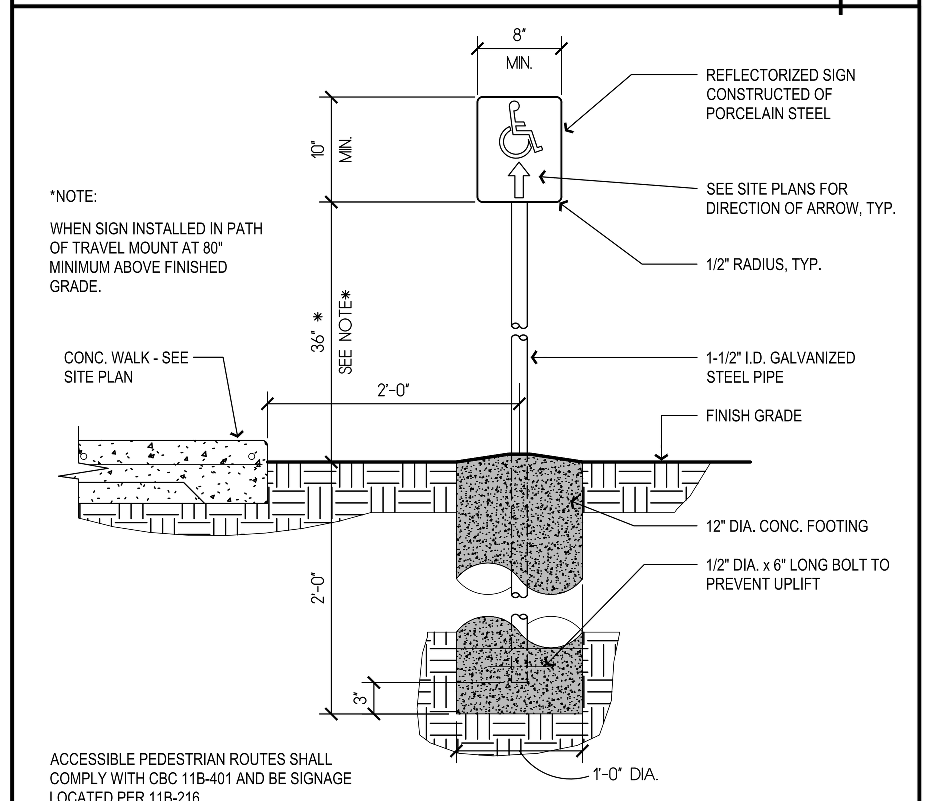

G200

ACCESSIBLE PATH DIRECTIONAL SIGN

SCALE: 1"=1'-0"

2

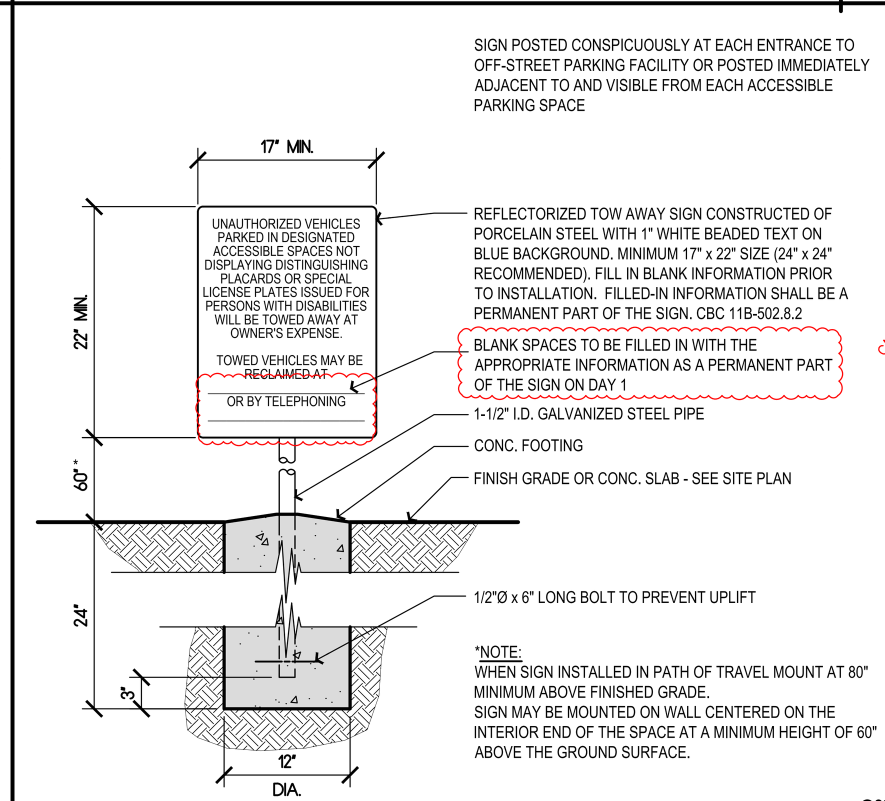

acc-parking-tow-sign.dwg

G200

ACCESSIBLE PARKING TOW SIGN

SCALE: 1"=1'-0"

3

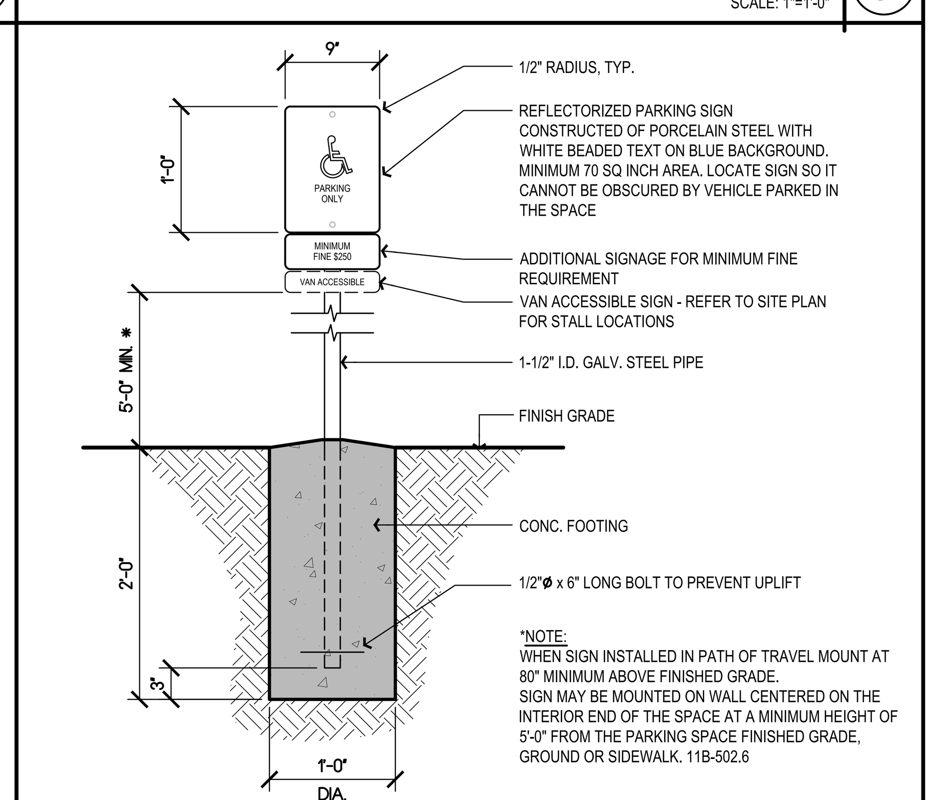

acc-parking-sign.dwg

G200

ACCESSIBLE PARKING SIGN AND POST

SCALE: 1"=1'-0"

4

Copyright © 2026

All ideas, designs, arrangements and plans indicated or represented by this drawing are owned by, and the property of, NICHOLS, MELBURG and ROSSETTO and were created, evolved and developed for use on, and in conjunction with, the specified project. None of such ideas, designs, arrangements or plans shall be used by, or disclosed to any person, firm or corporation for any purpose whatsoever without the written permission of NICHOLS, MELBURG and ROSSETTO.

NICHOLS MELBURG ROSSETTO
ARCHITECTS + ENGINEERS
300 KNOLLCREST DRIVE
REDDING, CA. 96002
(530) 222-3300 (530) 222-3538 FAX
http://www.nmrdesign.com

CONSULTANTS

LICENSE STAMPS

LICENSED ARCHITECT
DEVEN CARTER
C 34730
REN. 5/31/27
STATE OF CALIFORNIA

PROJECT NAME

RENOVATION FOR

Humboldt County Animal Shelter

980 Lycoming Ave
McKinleyville, CA 95519

SHEET TITLE

SITE & EXTERIOR ACCESSIBILITY DETAILS

DRAWING STATUS

CONSTRUCTION DOCUMENTS

BLDG. DEPT. SUBMITTAL

REVISIONS

Sym.	Description	Date
CASP 01	CASP	2026-04-03

Drawn By	KAJ
Date Issued	04-03-2026
Scale	AS NOTED
Project No.	17-6430

SHEET No.

G200

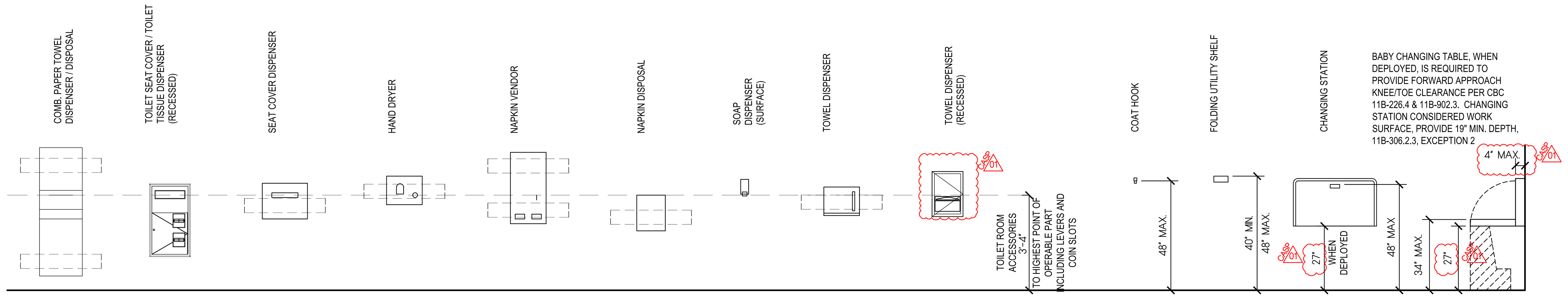

NOTE: AT ACCESSORIES AND SPECIALTIES, SEE ACCESSORIES SCHEDULE A700 FOR DETAIL REFERENCES.

ACCESSIBLE STANDARDS, BACKING SCHEDULE AND TYPICAL MOUNTING HEIGHTS FOR ACCESSORIES, FIXTURES AND EQUIPMENT

CBC 11B-603.3, 11B-603.4, 11B-603.5

ACCESSIBLE STANDARDS FOR TOILET ROOM ACCESSORIES

SCALE: 3/8"=1'-0" (5)

NOTE:
REFER TO CBC 11B-604. ALL DIMENSIONS ARE CLEAR DIMENSIONS FROM EDGE OF FIXTURE OR FACE OF FINISH. WATER CLOSETS SHALL BE POSITIONED WITH A WALL OR PARTITION TO THE REAR AND TO ONE SIDE. THE CENTERLINE OF THE WATER CLOSET SHALL BE 1'-5" MINIMUM TO 1'-6" MAXIMUM FROM THE SIDE WALL OR PARTITION, EXCEPT THAT THE WATER CLOSET SHALL BE 1'-5" MINIMUM AND 1'-7" MAXIMUM FROM THE SIDE WALL OR PARTITION IN THE AMBULATORY ACCESSIBLE TOILET COMPARTMENT SPECIFIED IN SECTION 11B-604.8.2. WATER CLOSETS SHALL BE ARRANGED FOR A LEFT-HAND OR RIGHT-HAND APPROACH.

NURSE CALL:
1. SHALL BE LOCATED TO THE SIDE OF THE TOILET WITHIN 1'-0" OF THE FRONT OF THE TOILET BOWL AND BETWEEN 3'-0" AND 4'-0" ABOVE THE FINISH FLOOR;
2. SHALL HAVE A PULL-CORD THAT EXTENDS TO WITHIN 1'-0" OF THE FINISHED FLOOR

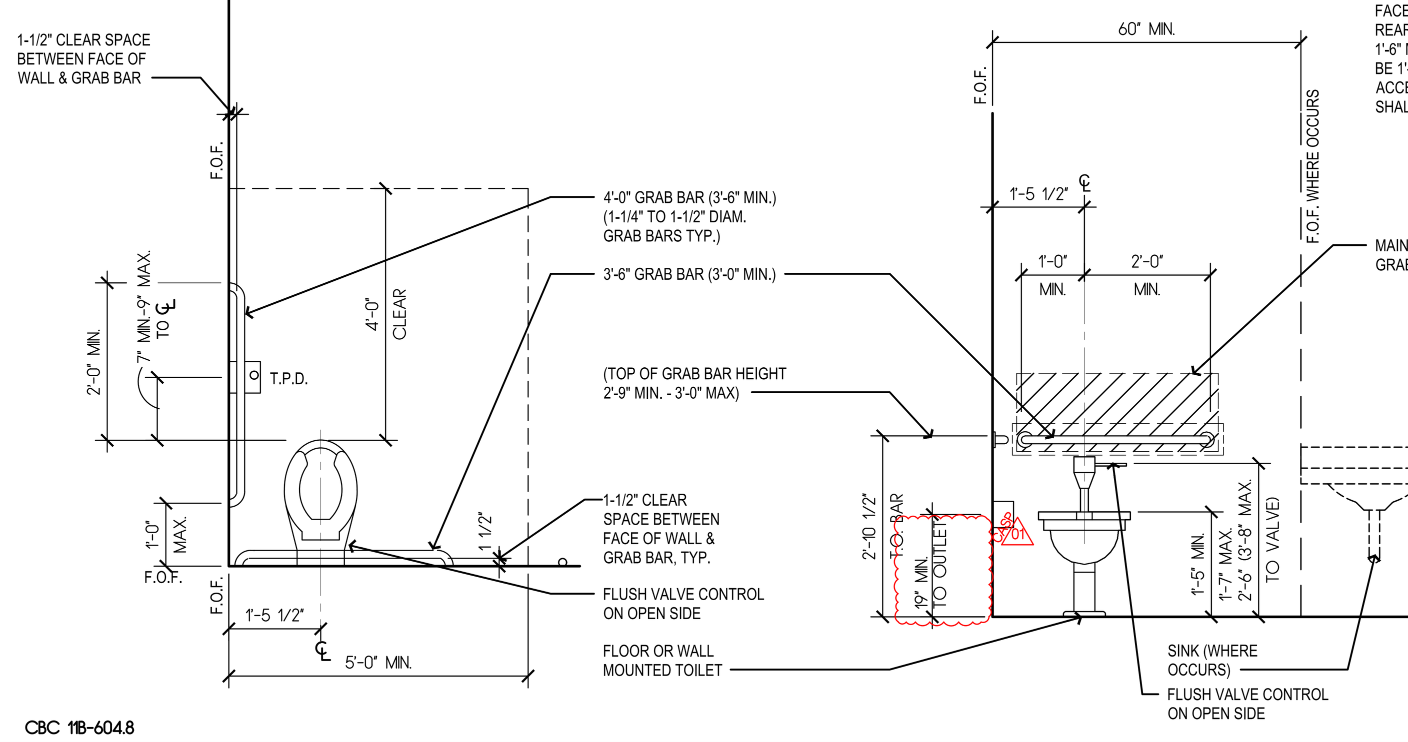

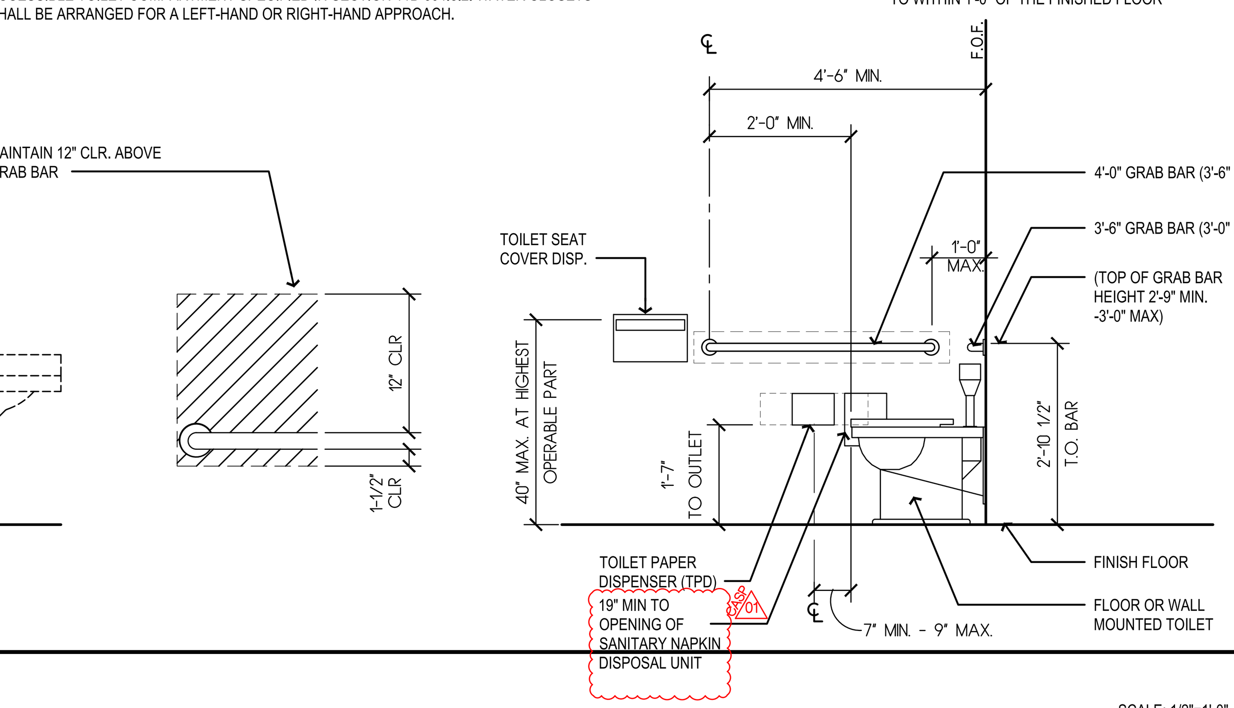

CBC 11B-604.8

ACCESSIBLE TOILET

SCALE: 1/2"=1'-0" (6)

ACCESSIBILITY & ACCESSORY BLOCKING

1. CODE SECTION REFERENCES ARE ONLY TO ASSIST THE END-USER OF THESE DRAWINGS AND SHALL NOT BE CONSTRUED AS PROVIDING ALL NECESSARY CODE REFERENCES; THE CONTRACTOR IS MANDATED TO BE FAMILIAR WITH AND REVIEW ANY AND ALL APPLICABLE CODES WHETHER OR NOT SPECIFICALLY INDICATED.
2. ALL DIMENSIONS ARE CLEAR DIMENSIONS FROM EDGE OF FIXTURE OR FACE OF FINISH.
3. THESE DRAWINGS ARE DIAGRAMATIC REPRESENTATIONS OF SPECIFIC CODE CONDITIONS
4. NOT ALL CONDITIONS ON THIS SHEET OCCUR WITHIN THIS PROJECT
5. ALL DOORS SHALL BE A MINIMUM OF 32" CLEAR. REFER TO OPENING SCHEDULE(S) AND CBC 11B-404.2.3.
6. THE SEAT HEIGHT OF WATER CLOSETS ABOVE THE FINISH FLOOR SHALL BE 1'-5" MINIMUM AND 1'-7" MAXIMUM MEASURED TO THE TOP OF THE SEAT, REFER TO CBC 11B-604.4.
7. DIMENSIONS FOR MOUNTING HEIGHTS OF SOAP DISPENSERS (SD) AND PAPER TOWEL
8. DISPENSERS (PTD) SHALL NOT APPLY AT LOCATIONS WHERE THEY ARE SHOWN MOUNTED OVER COUNTERTOPS.
9. GRAB BARS:
   - 9.1. GRAB BARS, TUB AND SHOWER SEATS, FASTENERS AND MOUNTING DEVICES SHALL BE DESIGNED FOR A VERTICAL OR HORIZONTAL FORCE OF 250 POUNDS APPLIED AT ANY POINT ON THE GRAB BAR, FASTENER, MOUNTING DEVICE, OR SUPPORTIVE STRUCTURE.
   - 9.2. GRAB BARS AND ANY WALL OR OTHER SURFACE ADJACENT TO IT SHALL BE FREE OF ANY SHARP OR ABRASIVE ELEMENTS AND SHALL HAVE ROUNDED EDGES.
   - 9.3. GRAB BARS SHALL NOT ROTATE WITHIN THEIR FITTINGS.
10. PROVIDE BACKING FOR ALL EQUIPMENT AND CASEWORK MOUNTED ON THE WALL. REFER TO SHEET A900 FOR TYPICAL BACKING DETAILS.
11. GENERAL CONTRACTOR TO PROVIDE STRUCTURAL SUPPORT AND/OR METAL REINFORCEMENT IN STUD WALLS AT ALL CASEWORK, CABINETS, SHELVING, EQUIPMENT ETC. REFER TO ADJACENT DETAILS FOR TYPICAL BACKING REQUIREMENTS AND TYPICAL MOUNTING HEIGHTS AND ARRANGEMENTS OF COMMON SPECIALTY ITEMS INCLUDING SHOWERS AND TOILET ROOMS.
12. ALL RECESSED SPECIALTIES SHOWN ON ELEVATIONS THAT ARE LOCATED IN FIRE RATED WALLS ARE TO BE 5-SIDED WITH 5/8" TYPE 'X' GYP BOARD.

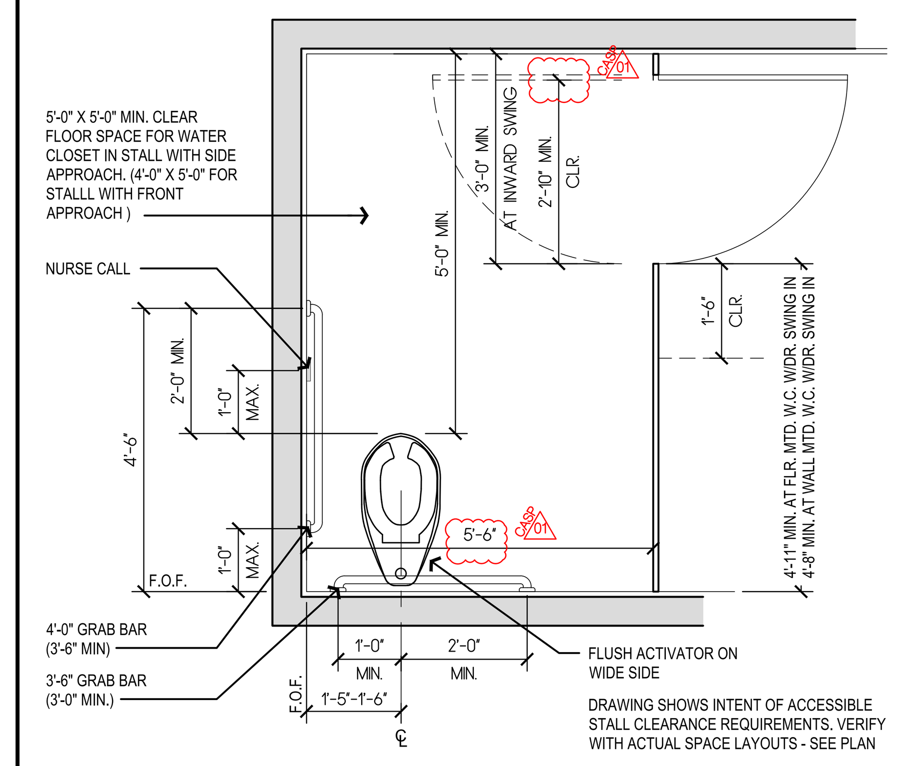

DRAWING SHOWS INTENT OF ACCESSIBLE STALL CLEARANCE REQUIREMENTS. VERIFY WITH ACTUAL SPACE LAYOUTS - SEE PLAN

CBC 11B-604

ACCESSIBLE RESTROOM - DOOR OPENING AT SIDE OF STALL

SCALE: 1/2"=1'-0" (2)

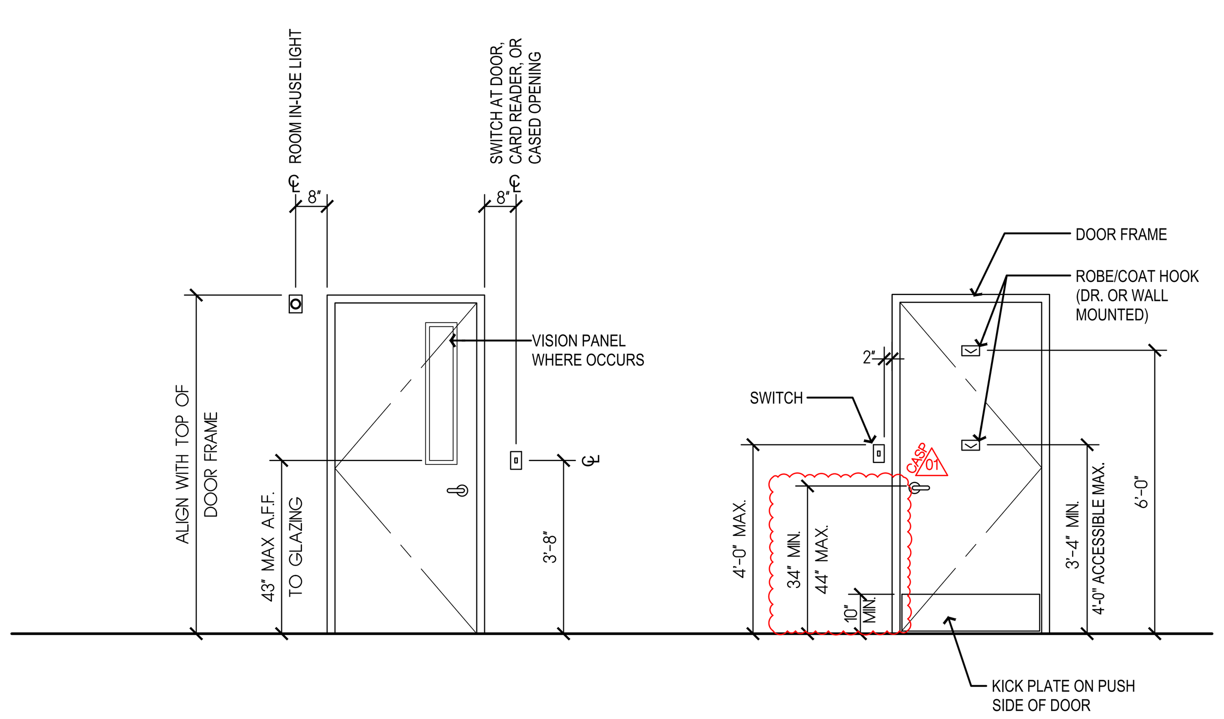

CBC 1010

DOORS

SCALE: 3/8"=1'-0" (15)

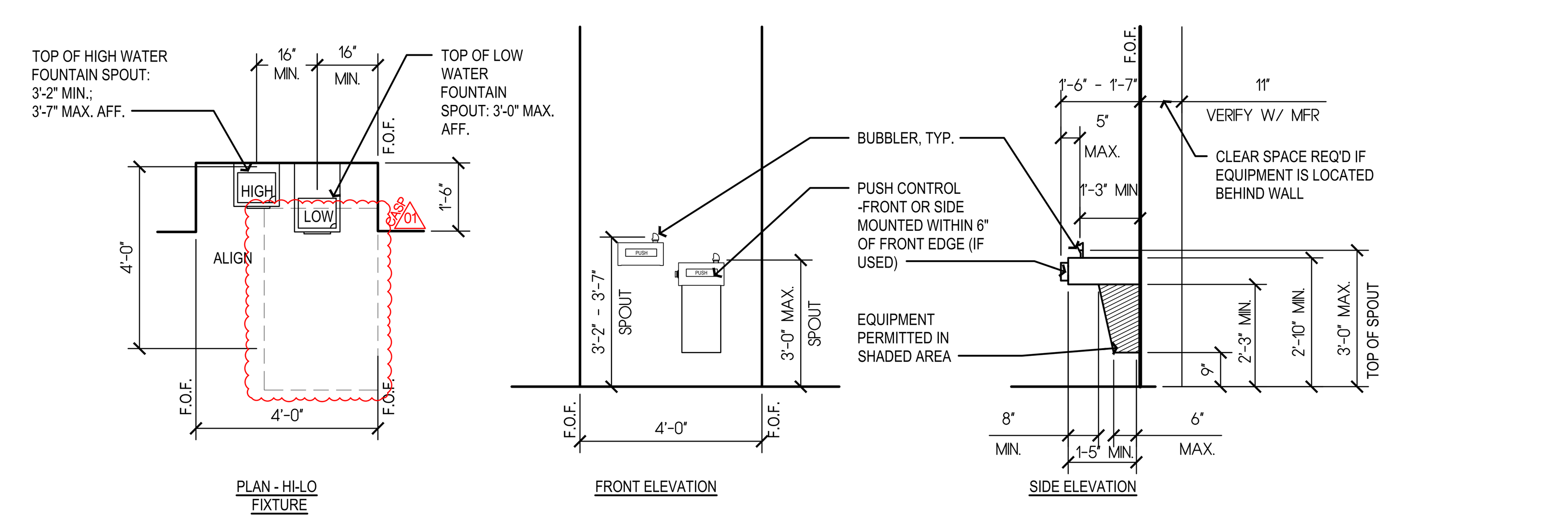

NOTE:
ALL DRINKING FOUNTAINS SHALL EITHER BE LOCATED COMPLETELY WITHIN ALCOVES, POSITIONED COMPLETELY BETWEEN WING WALLS, OR OTHERWISE POSITIONED SO AS NOT TO ENCROACH INTO PEDESTRIAN WAYS. WHEN USED, WING WALLS OR BARRIERS SHALL PROJECT HORIZONTALLY AT LEAST AS FAR AS THE DRINKING FOUNTAIN AND TO WITHIN 6 INCHES VERTICALLY FROM THE FLOOR OR GROUND SURFACE.

CBC 11B-602

DRINKING FOUNTAIN

SCALE: 3/8"=1'-0" (7)

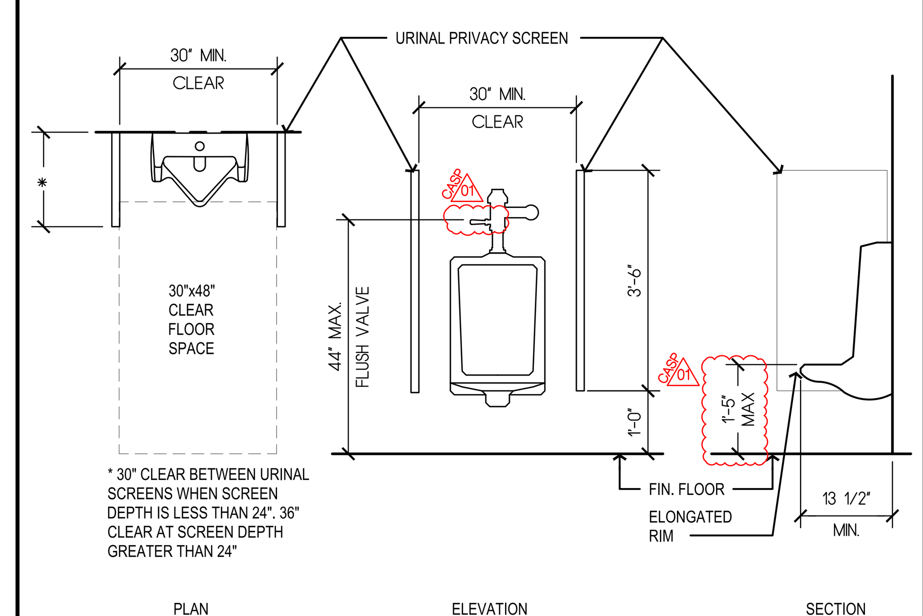

CBC 11B-604

ACCESSIBLE URINAL

SCALE: 1/2"=1'-0" (3)

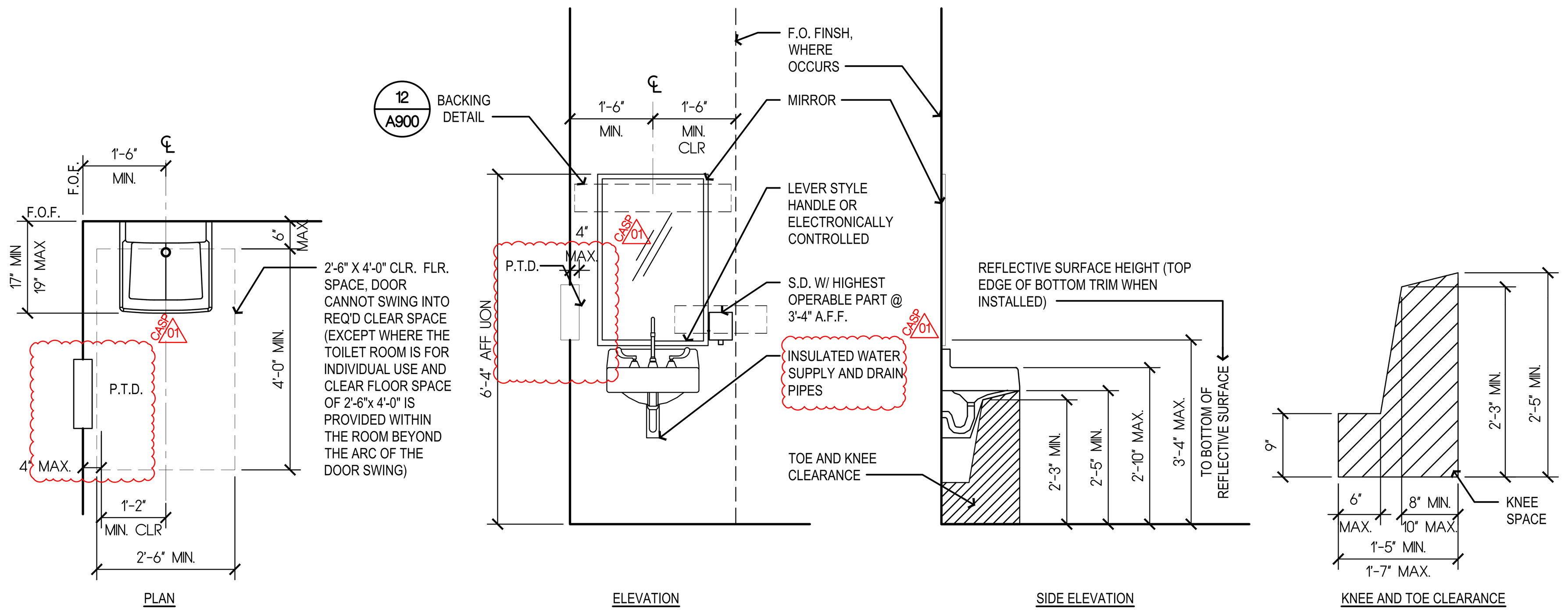

CBC 11B-606

ACCESSIBLE LAVATORY

SCALE: 1/2"=1'-0" (8)

DRAWING SHOWS INTENT OF ACCESSIBLE STALL CLEARANCE REQUIREMENTS. VERIFY WITH ACTUAL SPACE LAYOUTS - SEE PLAN

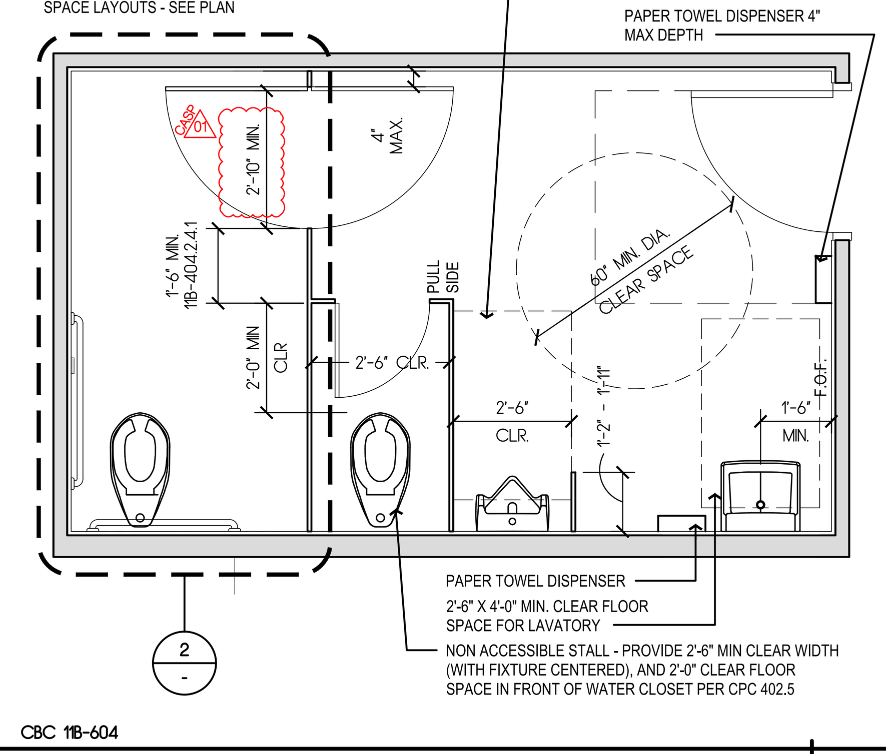

CBC 11B-604

ACCESSIBLE RESTROOM - MULTIPLE WATER CLOSET

SCALE: 3/8"=1'-0" (4)

Copyright © 2026

All ideas, designs, arrangements and plans indicated or represented by this drawing are owned by, and the property of, NICHOLS, MELBURG and ROSSETTO and were created, evolved and developed for use on, and in conjunction with, the specified project. None of such ideas, designs, arrangements or plans shall be used by, or disclosed to any person, firm or corporation for any purpose whatsoever without the written permission of NICHOLS, MELBURG and ROSSETTO.

NICHOLS MELBURG & ROSSETTO
ARCHITECTS + ENGINEERS
300 KNOLLCREST DRIVE
REDDING, CA. 96002
(530) 222-3300 (530) 222-3538 FAX
http://www.nmrdesign.com

CONSULTANTS

LICENSE STAMPS

LICENSED ARCHITECT DEVEN CARTER C 34730 REN. 5/31/27 STATE OF CALIFORNIA

PROJECT NAME

RENOVATION FOR

Humboldt County Animal Shelter

**980 Lycoming Ave
McKinleyville, CA 95519**

SHEET TITLE

INTERIOR ACCESSIBILITY DETAILS

DRAWING STATUS

CONSTRUCTION DOCUMENTS

BLDG. DEPT. SUBMITTAL

REVISIONS

Sym.	Description	Date
CASP 01	CASP	2026-04-03

Drawn By	KAJ
Date Issued	04-03-2026
Scale	AS NOTED
Project No.	17-6430

SHEET No.

G201

Login Name: TimS
Plot Date: April 03, 2026 - 10:20 am
File Name: N:\Projects\6000.Civic\2017\17-6430 Humboldt County ADA Compliance\15 Animal Shelter\10 DWGs\17-6430.15-G200-201_AS-ACCESS.dwg
XREFS: x-ttt

STANDARD GENERAL CIVIL NOTES

1. THE CONSTRUCTION AND INSTALLATION OF IMPROVEMENTS SHALL CONFORM TO THESE PLANS AND HUMBOLDT COUNTY CONSTRUCTION STANDARDS (CURRENT EDITION) AND STANDARD SPECIFICATIONS FOR PUBLIC WORKS CONSTRUCTION (GREEN BOOK - CURRENT EDITION).
2. SHOULD THERE BE A CONTRADICTION BETWEEN HUMBOLDT COUNTY STANDARDS DATED (CURRENT EDITION) AND THE GREEN BOOK, HUMBOLDT COUNTY STANDARDS SHALL PREVAIL.
3. ANY CHANGES TO THESE PLANS MUST RECEIVE PRIOR APPROVAL FROM THE HUMBOLDT COUNTY COMMUNITY DEVELOPMENT DEPARTMENT AND NICHOLS MELBURG & ROSSETTO.
4. THE LOCATION OF UNDERGROUND UTILITIES SHOWN HEREON, HAS BEEN DETERMINED FROM SURFACE EVIDENCE OF THEIR EXISTENCE OR FROM INFORMATION OBTAINED FROM THE UTILITY COMPANIES. NICHOLS MELBURG & ROSSETTO ACCEPTS NO LIABILITY FOR THE EXISTENCE OR NONEXISTENCE OF UTILITY LINES. CONTRACTORS AND OTHERS USING THESE PLANS SHALL CONFIRM THE LOCATION OF UNDERGROUND LINES OR STRUCTURES PRIOR TO BEGINNING ANY EXCAVATION. CALL USA AT 1-800-227-2600 TWO WORKING DAYS IN ADVANCE OF BEGINNING ANY EXCAVATION.
5. NOTIFY THE HUMBOLDT COUNTY ENGINEERING AND SURVEYING DIVISION TWO WORKING DAYS IN ADVANCE OF ANY CONNECTION TO COUNTY UTILITIES.
6. CONTRACTOR SHALL VERIFY LOCATIONS AND ELEVATIONS OF EXISTING UTILITIES PRIOR TO START OF CONSTRUCTION AND NOTIFY NICHOLS MELBURG & ROSSETTO OF ANY DIFFERENCE FROM THAT SHOWN ON THE PLAN.
7. CONTRACTOR SHALL POTHOLE AND VERIFY LOCATION OF ALL PIPE CROSSINGS PRIOR TO CONSTRUCTION.
8. TRENCHING AND BACKFILL FOR ALL UNDERGROUND CONSTRUCTION SHALL CONFORM TO HUMBOLDT COUNTY CONSTRUCTION STANDARDS.
9. DUST CONTROL SHALL CONFORM TO SECTION 3-12.1 AND 3-12.2 OF STANDARD SPECIFICATIONS FOR PUBLIC WORKS CONSTRUCTION (CURRENT EDITION) AND SHALL BE STRICTLY ADHERED TO.
10. STATIONING HEREON IS ALONG STREET CENTERLINE UNLESS OTHERWISE SHOWN OR INDICATED.
11. ALL QUANTITIES AND PAY ITEMS ARE AND WILL BE BASED ON HORIZONTAL MEASUREMENTS.
12. IF ANY ARCHAEOLOGICAL SITES ARE UNCOVERED DURING CONSTRUCTION WORK IS TO BE HALTED FOR EVALUATION OF THE SIGNIFICANCE OF THE SITE BY A QUALIFIED ARCHAEOLOGIST RETAINED BY THE DEVELOPER AND FOR IMPLEMENTATION OF MITIGATION MEASURES. IN ACCORDANCE WITH COUNTY POLICY, IF A SIGNIFICANT NATIVE AMERICAN CULTURAL OR SACRED FIND IS MADE, DETERMINE THE SIGNIFICANCE OF THE FIND AND DEVELOP APPROPRIATE MITIGATION MEASURES.
13. CONTRACTOR'S CONSTRUCTION PRACTICES SHALL CONFORM TO THE APPLICABLE CONSTRUCTION SAFETY ORDERS OF THE DIVISION OF INDUSTRIAL SAFETY OF THE STATE OF CALIFORNIA. CONTRACTOR SHALL ALWAYS COMPLY WITH OSHA REQUIREMENTS.
14. THE CONTRACTOR SHALL POST EMERGENCY TELEPHONE NUMBERS FOR POLICE, FIRE, AMBULANCE, AND THOSE AGENCIES RESPONSIBLE FOR MAINTENANCE OF UTILITIES IN THE VICINITY OF THE JOB SITE.
15. ALL EXISTING UTILITIES AND IMPROVEMENTS THAT BECOME DAMAGED DURING CONSTRUCTION SHALL BE COMPLETELY RESTORED TO THE SATISFACTION OF THE LOCAL AGENCY AT THE CONTRACTOR'S SOLE EXPENSE.
16. THE CONTRACTOR AGREES THAT, IN ACCORDANCE WITH GENERALLY ACCEPTED CONSTRUCTION PRACTICES, THE CONTRACTOR WILL BE REQUIRED TO ASSUME SOLE AND COMPLETE RESPONSIBILITY FOR JOB SITE CONDITIONS DURING THE COURSE OF CONSTRUCTION OF THE PROJECT INCLUDING SAFETY OF ALL PERSONS AND PROPERTY. THIS REQUIREMENT SHALL BE MADE TO APPLY CONTINUOUSLY AND NOT BE LIMITED TO NORMAL WORKING HOURS. THE CONTRACTOR FURTHER AGREES TO DEFEND, INDEMNIFY AND HOLD OWNER AND ENGINEER HARMLESS FROM ANY AND ALL LIABILITY, REAL OR ALLEGED, IN CONNECTION WITH THE PERFORMANCE OF WORK ON THE PROJECT, EXCEPTING LIABILITY ARISING FROM THE SOLE NEGLIGENCE OF THE OWNER OR ENGINEER.
17. EXCAVATIONS SHALL BE ADEQUATELY SHORED, BRACED, AND SHEETED SO THAT THE EARTH WILL NOT SLIDE OR SETTLE AND SO THAT ALL EXISTING IMPROVEMENTS OF ANY KIND WILL BE FULLY PROTECTED FROM DAMAGE. ANY DAMAGE RESULTING FROM A LACK OF ADEQUATE SHORING, BRACING, AND SHEETING SHALL BE THE RESPONSIBILITY OF THE CONTRACTOR AND THEY SHALL EFFECT NECESSARY REPAIRS OR RECONSTRUCTION AT THEIR OWN EXPENSE. THE CONTRACTOR SHALL PROVIDE ADEQUATE SHEETING, SHORING, BRACING, OR EQUIVALENT METHOD, FOR THE PROTECTION OF LIFE, OR LIMB.
18. ALL SITE ACCESSIBLE PARKING SPACES, PATHS OF TRAVEL, AND OTHER FACILITIES INCLUDING, BUT NOT LIMITED TO GRADING, DRAINAGE, SIGNAGE, AND MARKINGS SHALL BE CONSTRUCTED IN COMPLIANCE WITH CALIFORNIA TITLE 24 STANDARDS AND AMERICANS WITH DISABILITIES ACT ACCESSIBILITY GUIDELINES.
19. SHOULD IT APPEAR THAT THE WORK TO BE DONE, OR ANY MATTER RELATIVE THERETO, IS NOT SUFFICIENTLY DETAILED OR EXPLAINED WITHIN THESE PLANS, THE CONTRACTOR SHALL CONTACT NMR AT (530) 891-1710 FOR FURTHER EXPLANATION, AS MAY BE NECESSARY.
20. ALL FIRE HYDRANTS, ELECTROLIERS, AND METER BOXES SHALL CLEAR ALL DRIVEWAYS, EMERGENCY VEHICLE ACCESS EASEMENTS, AND OTHER FACILITIES AS REQUIRED BY THE GOVERNING AGENCY.
21. SHOULD THE CONTRACTOR REQUEST REVISIONS TO THE IMPROVEMENT PLANS TO FACILITATE THEIR OPERATION, THE CONTRACTOR SHALL COMPENSATE NMR, FOR SUCH ADDITIONAL REVISIONS.
22. UNLESS OTHERWISE NOTED, THE WORD "INSTALL" SHALL INCLUDE THE PURCHASE, DELIVERY, PLACEMENT, AND CONNECTION OF ITEMS DESCRIBED ON THESE PLANS AND ALL APPURTENANCES REQUIRED FOR A COMPLETE INSTALLATION.
23. ALL SANITARY SEWER AND WATER MAINS SHALL HAVE 10-F00T MINIMUM SEPARATION UNLESS SPECIAL PROVISIONS ARE MADE AND APPROVED IN ADVANCE BY HUMBOLDT COUNTY COMMUNITY DEVELOPMENT DEPARTMENT AND COUNTY OF HUMBOLDT.
24. THE CONSTRUCTION OF NEW MAIN LINES FOR THE CONVEYANCE OF POTABLE WATER AND NON-POTABLE MATERIAL SHALL CONFORM TO CALIFORNIA TITLE 22 CODE OF REGULATIONS, DIVISION 4 - ENVIRONMENTAL HEALTH, CHAPTER 16 - CALIFORNIA WATERWORKS STANDARDS, ARTICLE 4 - MATERIALS AND INSTALLATION OF WATER MAINS AND APPURTENANCES, §64572 - WATER MAIN SEPARATION. SAID REGULATION AND APPROVED CASES EXCEPTIONS ARE DETAILED HEREIN.
25. TOP OF GRATE AND FLOW LINE ELEVATIONS FOR CURB-OPENING INLETS ARE TAKEN AT THE CENTER OF THE INLET AND DO NOT REFLECT THE ELEVATION DROP AT THE LOCAL DEPRESSION.
26. TAMPER SWITCHES SHALL BE PLACED ON ALL VALVES CONTROLLING THE WATER SUPPLY TO THE AUTOMATIC FIRE SPRINKLER SYSTEM, INCLUDING BUT NOT LIMITED TO, THE OUTSIDE SCREW & YOKE (OS&Y) ON THE DOUBLE DETECTOR CHECK VALVE OR REDUCED PRESSURE PRINCIPLE DEVICE, VALVES ON THE SPRINKLER RISER, OR ANY OTHER VALVE CONTROLLING THE WATER SUPPLY. CFC 903.4.
27. CONTRACTOR SHALL OBTAIN AN ENCROACHMENT PERMIT FROM THE COUNTY OF HUMBOLDT OR THE COUNTY OF HUMBOLDT, WHICHEVER APPLIES, PRIOR TO ANY CONSTRUCTION WORK INVOLVING MAIN-LINE, PUBLIC UTILITY FACILITIES, OR WITHIN THE PUBLIC RIGHT OF WAY. FAILURE TO OBTAIN AN ENCROACHMENT PERMIT MAY DELAY ISSUANCE OF CERTIFICATE OF OCCUPANCY FOR ANY BUILDINGS ON THE SITE.
28. THE DEVELOPER AND/OR CONTRACTOR SHALL, THROUGH AN APPROVED PRIVATE MATERIALS TESTING LABORATORY AND AT THEIR EXPENSE, PROVIDE FOR ALL MATERIAL AND COMPACTION TESTS REQUIRED BY THE HUMBOLDT COUNTY DEVELOPMENT STANDARDS. TYPE AND FREQUENCY TO BE DETERMINED BY THE COUNTY INSPECTOR.
29. ALL UTILITY AND DRAINAGE CONDUITS SHALL BE INSTALLED PRIOR TO AC AND CONCRETE PLACEMENT.
30. THE CONTRACTOR SHALL PROVIDE BARRICADES, SIGNS, SAFETY DEVICES AND TRAFFIC CONTROL AS NECESSARY WITHIN THE CONSTRUCTION AREA.
31. REGULATORY SIGNS, IF NEEDED, WILL BE FURNISHED AND INSTALLED BY THE COUNTY. THE COSTS OF THE SIGNS AND INSTALLATION SHALL BE PAID FOR BY THE DEVELOPER.
32. THE ENGINEER OF WORK, WHOSE STAMP AND SIGNATURE APPEARS ON THESE PLANS, HEREBY CERTIFIES THAT THESE PLANS COMPLY WITH THE HUMBOLDT COUNTY GRADING, EXCAVATING AND FILLING.
33. THE DEVELOPER IS TO REPAIR ANY DAMAGE DONE TO EXISTING COUNTY OR COUNTY ROADS AS A RESULT OF CONSTRUCTION ACTIVITIES. THIS WILL INCLUDE MAINTENANCE AS WELL AS THE POSSIBLE RESURFACING OF THE ROAD.
34. NO CONSTRUCTION SHALL BEGIN UNTIL CONTRACTOR HAS GRADE SHEETS, AND SUFFICIENT CONTROL STAKES ARE SET BY THE PROJECT'S LAND SURVEYOR TO ENABLE WORK TO BE CONSTRUCTED AND CHECKED IN THE FIELD.
35. ALL EXISTING DRIVEWAYS, AND DRIVEWAYS CREATED DURING CONSTRUCTION, SHALL BE PAVED TO COUNTY STANDARDS AS PART OF THIS PROJECT.
36. NOTIFY THE COUNTY OF HUMBOLDT ENGINEERING DIVISION AND PUBLIC WORKS FIELD OPERATIONS TWO WORKING DAYS IN ADVANCE OF ANY CONNECTION TO COUNTY UTILITIES.

GRADING NOTES

1. GRADING SHALL CONFORM TO THE GRADING PLAN AND HUMBOLDT COUNTY GRADING PERMIT ISSUED FOR THIS PROJECT.
2. THIS GRADING PLAN IS TO BE USED IN CONJUNCTION WITH THE GEOTECHNICAL INVESTIGATION REPORT AND RECOMMENDATIONS.
3. THE EXISTING TOPOGRAPHY SHOWN ON THESE PLANS IS BASED ON A TOPOGRAPHIC SURVEY BY HUMCO LAND SURVEYING.
4. THE CONTRACTOR SHALL BE RESPONSIBLE FOR ANY FIELD CHANGES MADE WITHOUT WRITTEN AUTHORIZATION FROM HUMBOLDT COUNTY AND NMR.
5. BASED ON THE CONTRACTOR'S FIELD RECONNAISSANCE, THESE PLANS, AND THE GEOTECHNICAL INVESTIGATION REPORT RECOMMENDATIONS, CONTRACTOR SHALL ESTIMATE THE EARTHWORK QUANTITIES TO HIS SATISFACTION PRIOR TO THE START OF CONSTRUCTION. CONTRACTOR SHALL ARRANGE FOR DISPOSAL OF EXCESS MATERIAL OR ACQUISITION OF IMPORT MATERIAL AS REQUIRED TO COMPLETE THE GRADING AS SHOWN ON THE GRADING PLAN. NO ADDITIONAL COMPENSATION WILL BE MADE FOR ANY EXPORT OR IMPORT REQUIRED, EXCEPT AS SPECIFICALLY PROVIDED FOR IN THE BID DOCUMENTS.
6. ALL UNSUITABLE MATERIAL, INCLUDING ANY DELETERIOUS VEGETATION, RUBBLE, ASPHALT, CONCRETE, ETC., SHALL BE COMPLETELY REMOVED FROM THE SITE AND DISPOSED OF IN A LOCATION APPROVED BY THE COUNTY ENGINEER AND THE HUMBOLDT COUNTY ENVIRONMENTAL HEALTH DIVISION AT THE CONTRACTORS EXPENSE AND SHALL NOT BE UTILIZED FOR ANY BACKFILL OR STRUCTURAL MATERIAL UNLESS OTHERWISE NOTED.
7. ALL CUT AND FILL SLOPES ARE TO BE 2 HORIZONTAL TO 1 VERTICAL, UNLESS SHOWN OTHERWISE ON THIS PLAN.
8. MATURE TREES OVER SIX INCHES IN DIAMETER AT FOUR FEET ABOVE THE GROUND AND LOCATED OUTSIDE OF BUILDING SITES SHALL BE SAVED. INSTALL SNOW FENCE AROUND TREE AT DRIPLINE.
9. ALL WELLS DISCOVERED WITHIN THE DEVELOPMENT SHALL BE DESTROYED AT THE DEVELOPERS EXPENSE PER STATE OF CALIFORNIA WATER WELL STANDARDS BULLETIN 74-81, PART III UNDER PERMIT ISSUED BY THE HUMBOLDT COUNTY ENVIRONMENTAL HEALTH DIVISION.
10. STOCKPILING OF MATERIAL SHALL BE LIMITED TO HORIZONTAL AND VERTICAL PARAMETERS SHOWN ON THE GRADING PLAN.
11. QUANTITIES SHOWN ARE FOR COUNTY USE ONLY. CONTRACTOR SHALL ESTIMATE THE EARTHWORK QUANTITIES PRIOR TO START OF CONSTRUCTION AND IN ACCORDANCE WITH THE GRADING NOTES SHOWN ON SHEET C5.
12. CONTRACTOR SHALL ROUND THE TOP OF ALL SLOPES. FINISH GRADING SHALL BE APPROVED BY THE COUNTY PRIOR TO FINAL HYDROSEEDING.
13. FINISHED GRADE SHOWN ON GRADING PLANS DOES NOT INCLUDE ALLOWANCE FOR LANDSCAPE MATERIAL (I.E. BARK, SOD, TOPSOIL, ETC.).

STREET SURFACE IMPROVMENTS

1. ASPHALT CONCRETE AND AGGREGATE BASE MATERIALS AND PLACEMENT SHALL CONFORM TO GEOTECHNICAL RECOMMENDATIONS, DEL NORTE COUNTY CONSTRUCTION STANDARDS, AND THE STANDARD SPECIFICATIONS FOR PUBLIC WORKS CONSTRUCTION (GREEN BOOK).
2. PAVING: ALL POINTS OF GRADE CHANGE NOT WITHIN A VERTICAL CURVE SHALL BE ROUNDED IN THE FIELD FOR PROPER APPEARANCE.
3. ALL MANHOLE RIMS, VALVE BOXES, PUBLIC MONUMENT BOXES, AND SIMILAR ITEMS SHALL BE ADJUSTED TO FINISH GRADE AFTER FINISHED SURFACE HAS BEEN PLACED.
4. THE CONTRACTOR SHALL SUPPLY A TRAFFIC CONTROL PLAN, AND PUBLIC SAFETY PLAN TO DEL NORTE COUNTY COMMUNITY DEVELOPMENT DEPARTMENT FOR APPROVAL PRIOR TO THE COMMENCEMENT OF ANY CONSTRUCTION.
5. THE CONTRACTOR SHALL REPLACE ALL EXISTING TRAFFIC CONTROL DEVICES INCLUDING, BUT NOT LIMITED TO TRAFFIC SIGNS, LINES, MARKINGS, LEGENDS, AND MARKERS THAT ARE DAMAGED, OBLITERATED OR DESTROYED DURING THE COURSE OF CONSTRUCTION AS DIRECTED BY THE COUNTY ENGINEER.

EROSION CONTROL NOTES

1. THE CONTRACTOR SHALL PREPARE, SUBMIT AND IMPLEMENT A2022-0057-DWQ. THE CONTRACTOR SHALL BE RESPONSIBLE FOR ANY POLLUTION CONTROL IN ACCORDANCE WITH STANDARD SPECIFICATIONS FOR PUBLIC WORKS CONSTRUCTION (GREEN BOOK - CURRENT EDITION) SECTION 7-8.6 BETWEEN THE TIME OF INITIAL EARTH DISTURBANCE AND IMPLEMENTATION OF THE FINAL EROSION CONTROL PLAN.
2. THE CONTRACTOR SHALL BE RESPONSIBLE FOR FILING THE NOTICE OF INTENT FOR THE PROJECT WITH THE STATE WATER RESOURCES CONTROL STORM WATER POLLUTION PREVENTION PLAN IN ACCORDANCE WITH THE GENERAL PERMIT FOR DISCHARGES OF STORM WATER ASSOCIATED WITH CONSTRUCTION ACTIVITY CONSTRUCTION GENERAL PERMIT ORDER WQ INSPECTION, MONITORING, AND REPORTING AS REQUIRED BY THE GENERAL PERMIT FOR DISCHARGES OF STORM WATER ASSOCIATED WITH CONSTRUCTION ACTIVITY CONSTRUCTION GENERAL PERMIT ORDER WQ 2022-0057-DWQ FROM THE TIME OF INITIAL EARTH DISTURBANCE UNTIL ACCEPTANCE OF THE PROJECT BY THE OWNER.
3. UTILIZE DETAILS SHOWN ON THIS SHEET, AND BEST MANAGEMENT PRACTICES SHOWN ON THE COUNTY WEBSITE, AND PER COUNTY AND STATE REQUIREMENTS, TO CONTROL EROSION AND SEDIMENTATION.
4. COMPLETE ALL REQUIRED FORMS AND PROCEDURES PER COUNTY AND STATE REQUIREMENTS AS FOUND ON THE COUNTY WEBSITE.

EROSION & SEDIMENTATION CONTROL DETAILS AND BMPs

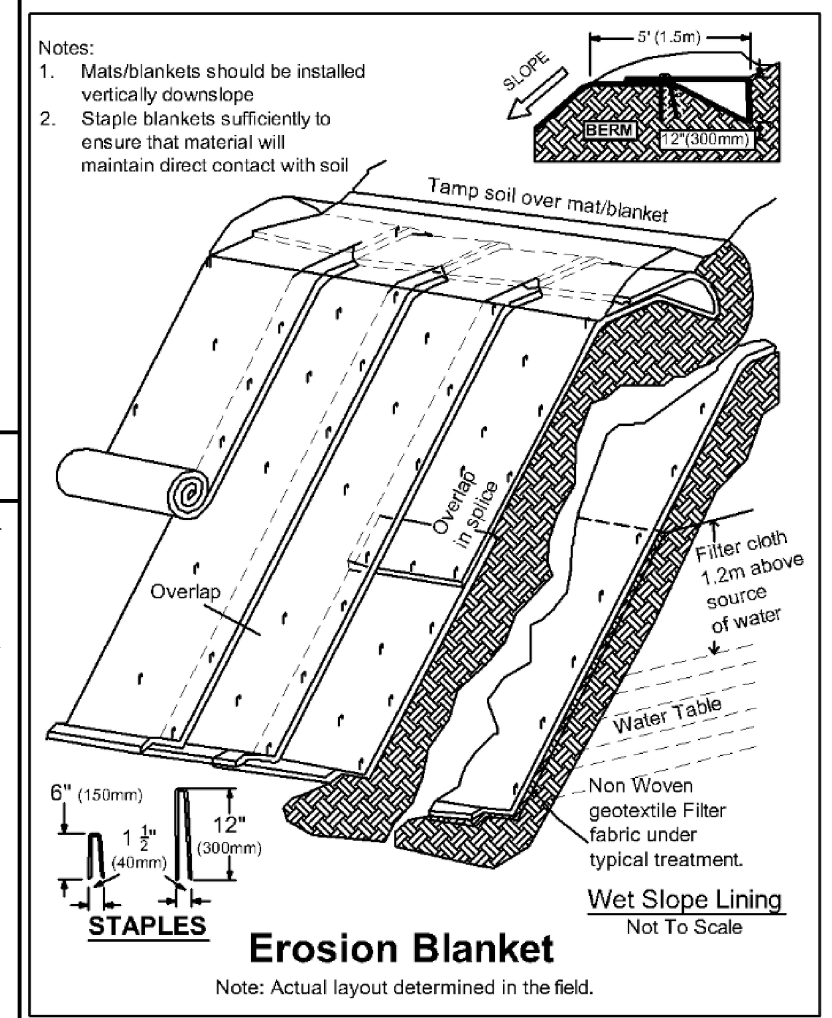

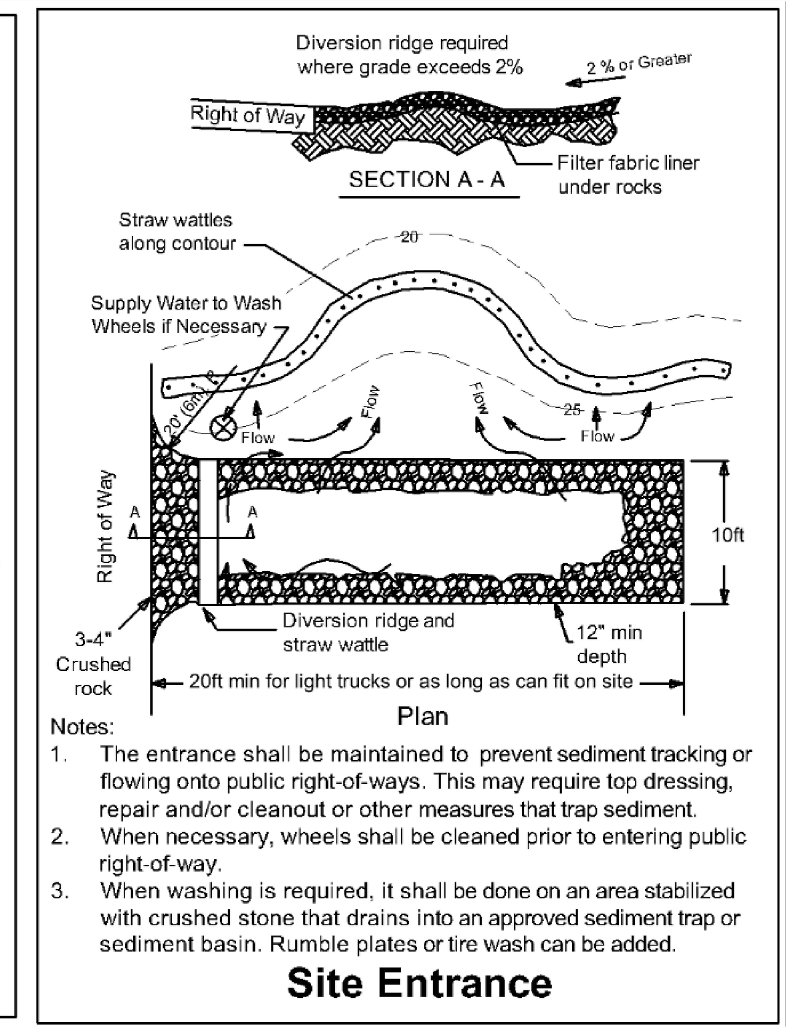

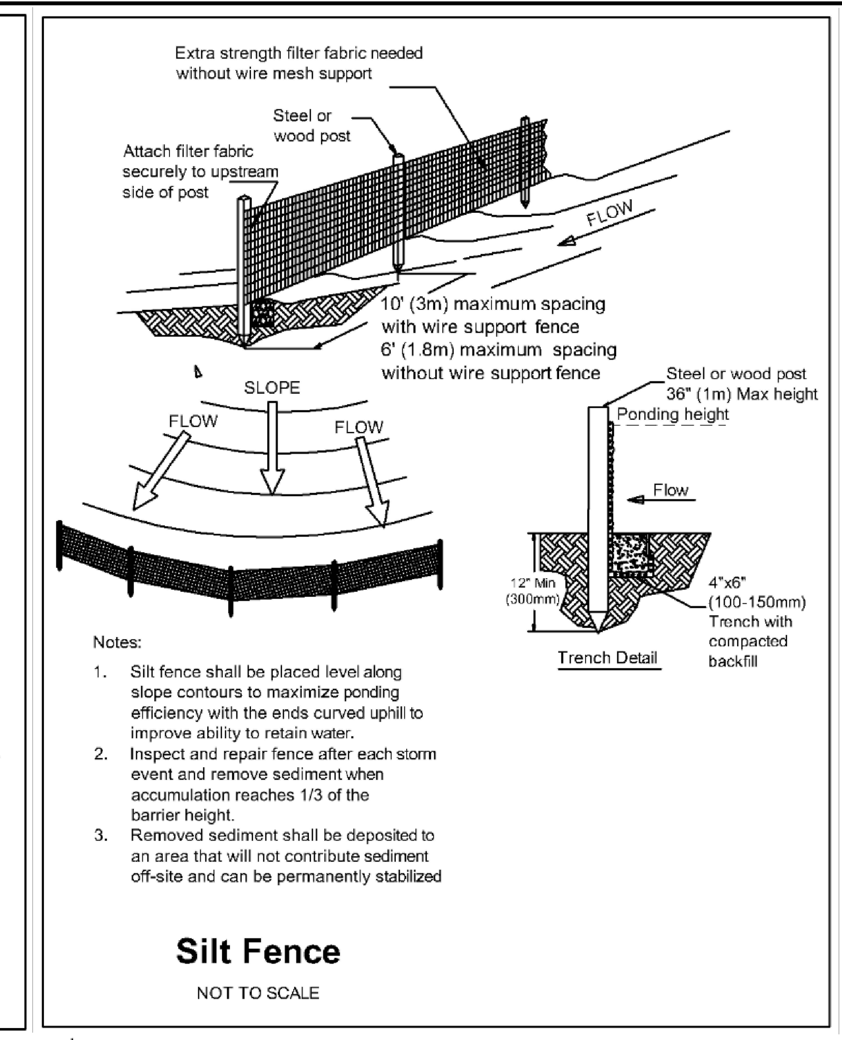

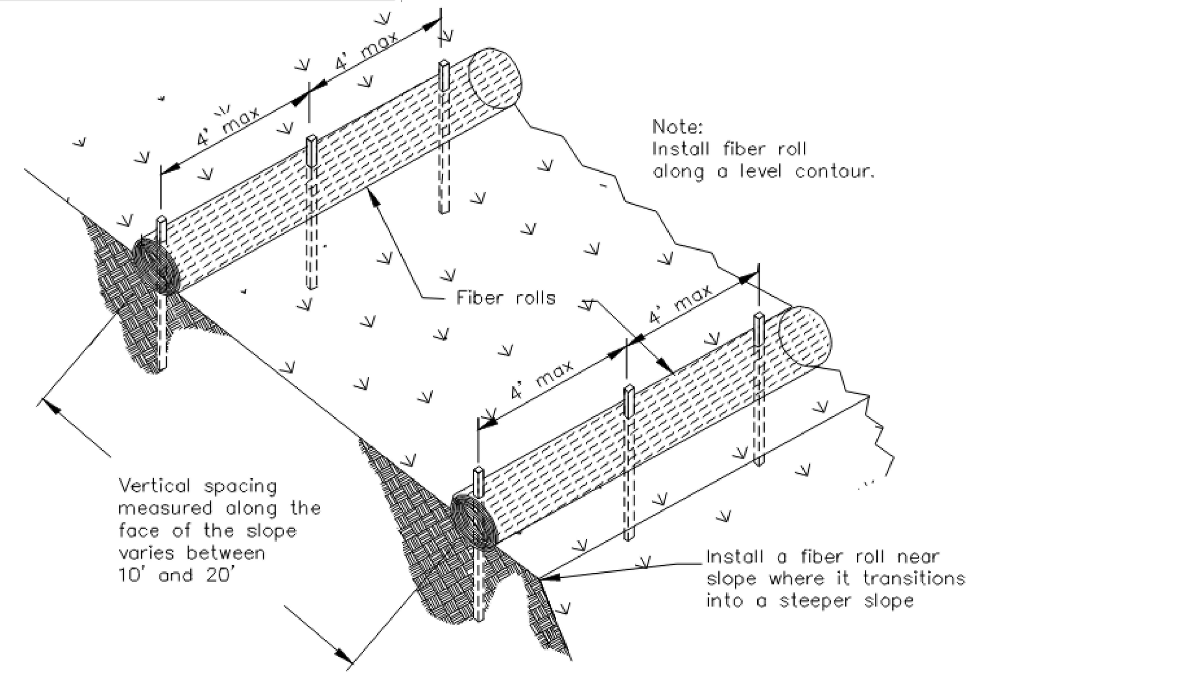

TYPICAL FIBER ROLL INSTALLATION
N.T.S.

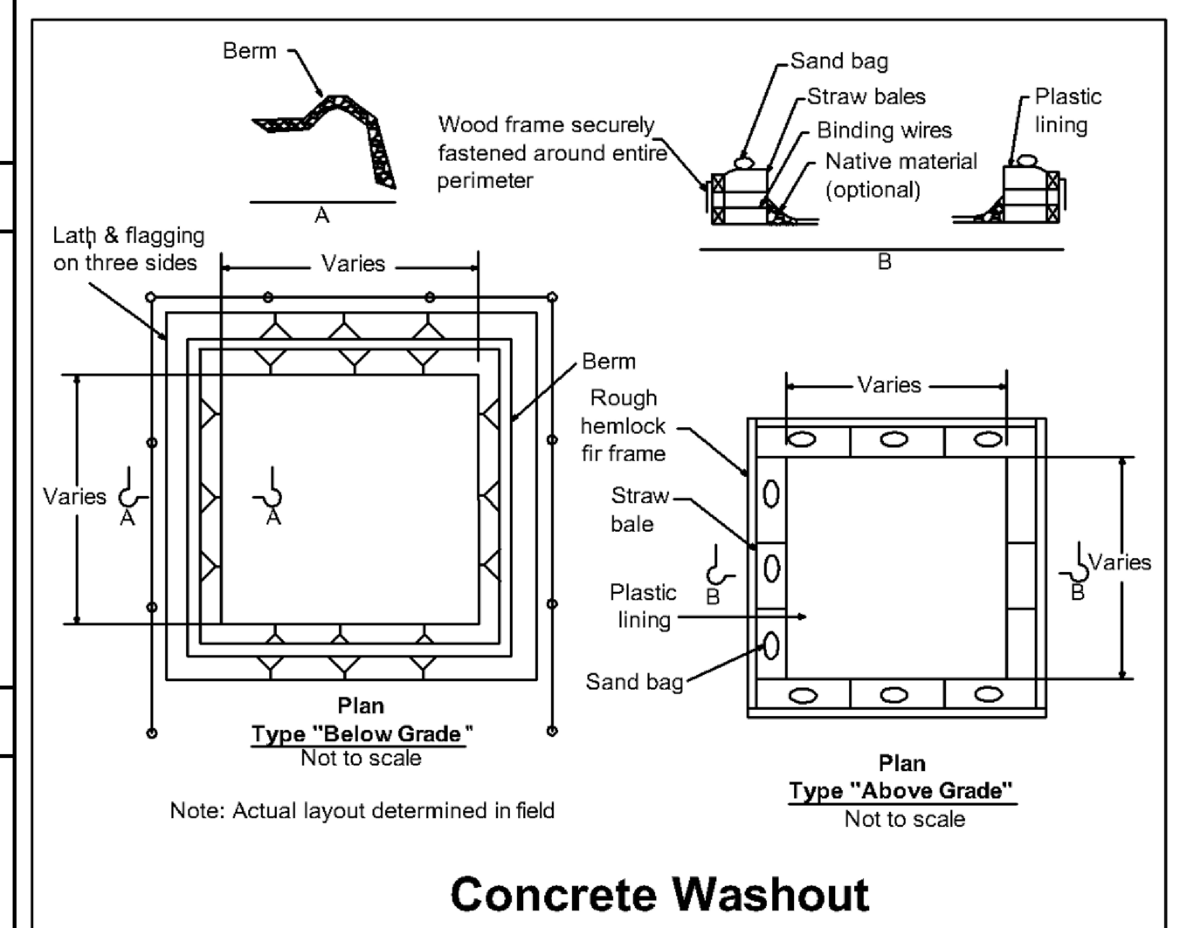

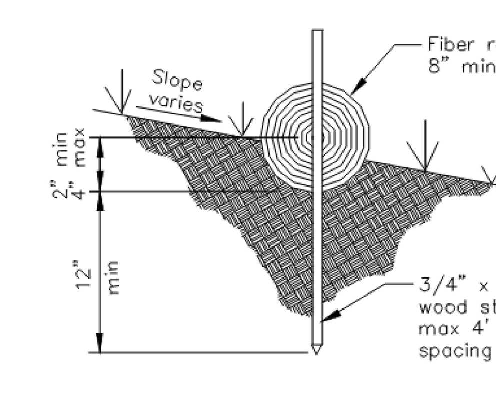

ENTRENCHMENT DETAIL
N.T.S.

Copyright © 2025
All ideas, designs, arrangements and plans indicated or represented by this drawing are owned by, and the property of, NICHOLS, MELBURG and ROSSETTO and were created, evolved and developed for use on, and in conjunction with, the specified project. None of such ideas, designs, arrangements or plans shall be used by, or disclosed to any person, firm or corporation for any purpose whatsoever without the written permission of NICHOLS, MELBURG and ROSSETTO.

NICHOLS MELBURG ROSSETTO
ARCHITECTS + ENGINEERS
300 KNOLLCREST DRIVE
REDDING, CA. 96002
(530) 222-3300 (530) 222-3538 FAX
http://www.nmrdesign.com

CONSULTANTS

LICENSE STAMPS

LICENSED ARCHITECT DEVEN CARTER C 34730 REN. 5/31/27 STATE OF CALIFORNIA

PROJECT NAME

RENOVATION FOR

Humboldt County Animal Shelter

980 Lycoming Ave
McKinleyville, CA 95519

SHEET TITLE

EROSION & SEDIMENTATION CONTROL

DRAWING STATUS

CONSTRUCTION DOCUMENTS

BLDG. DEPT. SUBMITTAL

REVISIONS

Sym.	Description	Date

Drawn By	KAJ
Date Issued	04-03-2026
Scale	AS NOTED
Project No.	17-6430

SHEET No.

A050

Login Name: Kurt_J
Plot Date: December 30, 2025 - 12:57 pm
File Name: N:\Projects\6000Civic\2017\17-6430 Humboldt County ADA Compliance\15 Animal Shelter\10 DWGs\17-6430.15-A050__AS-ESC.dwg
XREFS: x-ttt

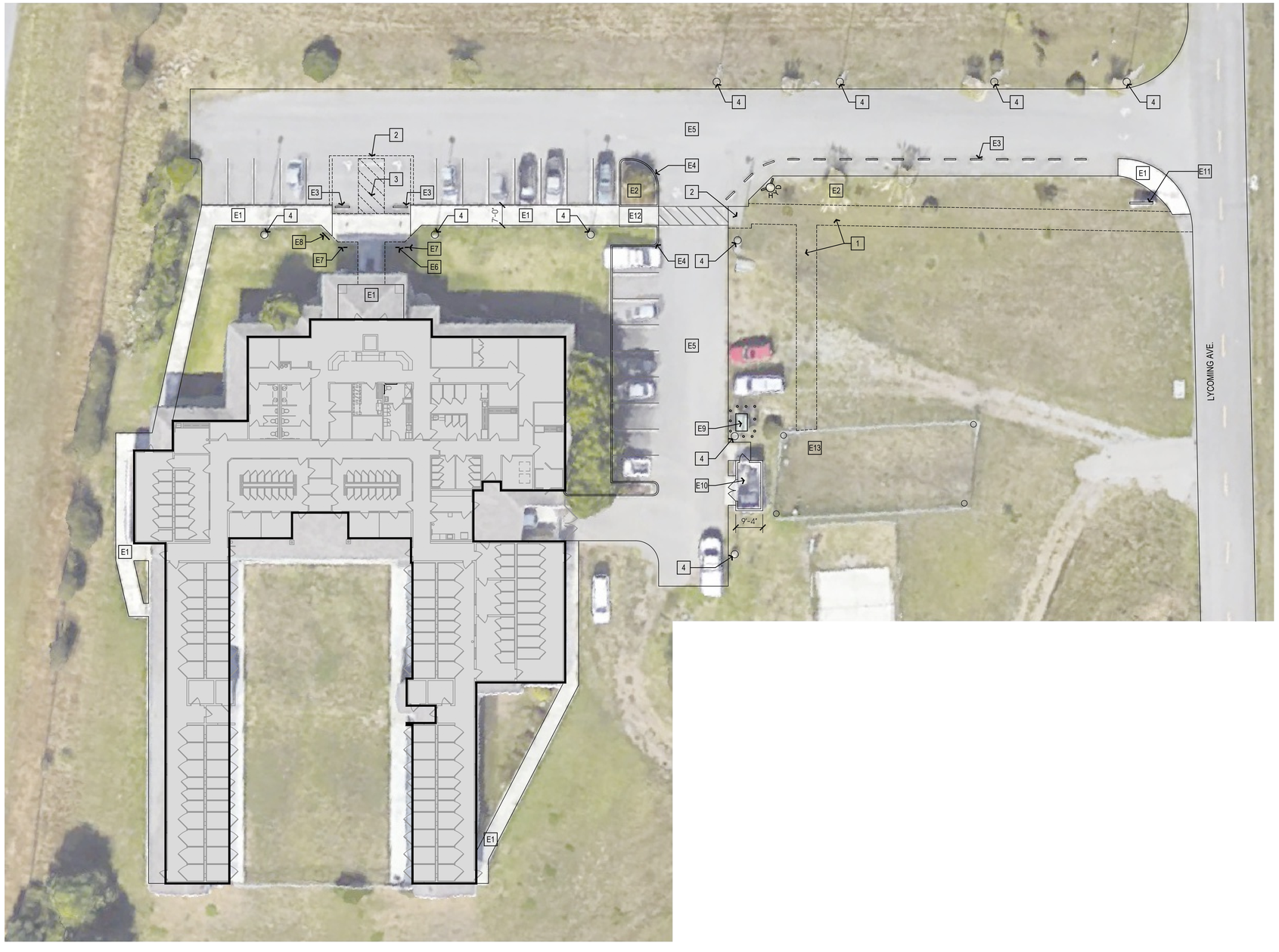

DEMO. SITE PLAN

SCALE: 1/16" = 1'-0"

KEYNOTES - EXISTING

E1	(E) CONCRETE WALK TO REMAIN
E2	(E) TREE TO REMAIN
E3	(E) CONC. WHEEL STOPS TO BE REMOVED AND REINSTALLED AFTER NEW CONCRETE PARKING.
E4	(E) CURB & GUTTER TO REMAIN
E5	(E) ASPHALT TO REMAIN
E6	(E) ACCESSIBLE PARKING SIGNAGE PER 11B-502.6 TO REMAIN - SEE 4/G200
E7	(E) TOWAWAY WARNING SIGN PER 11B-502.8.2 TO REMAIN - SEE 3/G200
E8	(E) BIKE RACK TO REMAIN
E9	(E) TRANSFORMER TO REMAIN
E10	(E) TRASH ENCLOSURE TO REMAIN
E11	(E) MONUMENT SIGN TO REMAIN
E12	(E) CURB RAMP TO REMAIN
E13	(E) FENCED DOG PLAY ENCLOSURE

KEYNOTES - DEMOLITION

1	EXCAVATE AND PREPARE GROUND FOR NEW CONC. WALKWAY - SEE SHT. A101
2	REMOVE ASPHALT, EXCAVATE AS REQ'D FOR INSTALLATION OF NEW CONC. WALKWAY OR ACCESSIBLE PARKING - SEE SHT. A101
3	REMOVE (E) STRIPING
4	(E) LIGHT POST ON A ROUND CONC. PEDESTAL & FOUNDATION. REMOVE (E) SUPPORT PLATE & REUSE (E) BOLTS, OR CUT AND GRIND, PREPARE FOR NEW.
5	SAWCUT AND REMOVE CONCRETE PAVING, RAMP AND CURB AND PREPARE FOR INSTALLATION OF NEW - SEE SHT. A101
6	
7	
8	

Copyright © 2025

All ideas, designs, arrangements and plans indicated or represented by this drawing are owned by, and the property of, NICHOLS, MELBURG and ROSSETTO and were created, evolved and developed for use on, and in conjunction with, the specified project. None of such ideas, designs, arrangements and plans shall be used by or disclosed to any person, firm or corporation for any purpose whatsoever without the written permission of NICHOLS, MELBURG and ROSSETTO.

NICHOLS MELBURG & ROSSETTO
ARCHITECTS + ENGINEERS
300 KNOLLCREST DRIVE
REDDING, CA. 96002
(530) 222-3300 (530) 222-3538 FAX
http://www.nmrdesign.com

CONSULTANTS

LICENSE STAMPS

LICENSED ARCHITECT
DEVEN KARTIK
C 34730
REN. 5/31/26
STATE OF CALIFORNIA

PROJECT NAME

RENOVATION FOR

Humboldt County Animal Shelter

980 Lycoming Ave
McKinleyville, CA 95519

SHEET TITLE

DEMOLITION SITE PLAN

DRAWING STATUS

CONSTRUCTION DOCUMENTS

BLDG. DEPT. SUBMITTAL

REVISIONS

Sym.	Description	Date

Drawn By	KAJ
Date Issued	04-03-2026
Scale	1/16" = 1'-0"
Project No.	17-6430

SHEET No.

A100

Login Name: Kart...J
Plot Date: December 01, 2025 - 10:14 am
File Name: N:\Projects\6000\2xx\2017\7-6430 Humboldt County ADA Compliance\5 Animal Shelter\10 DWGs\17-6430-A100_AS-D-SITE\.dwg
PAPER Size: 1'-6" x 8'-6" X vxcel

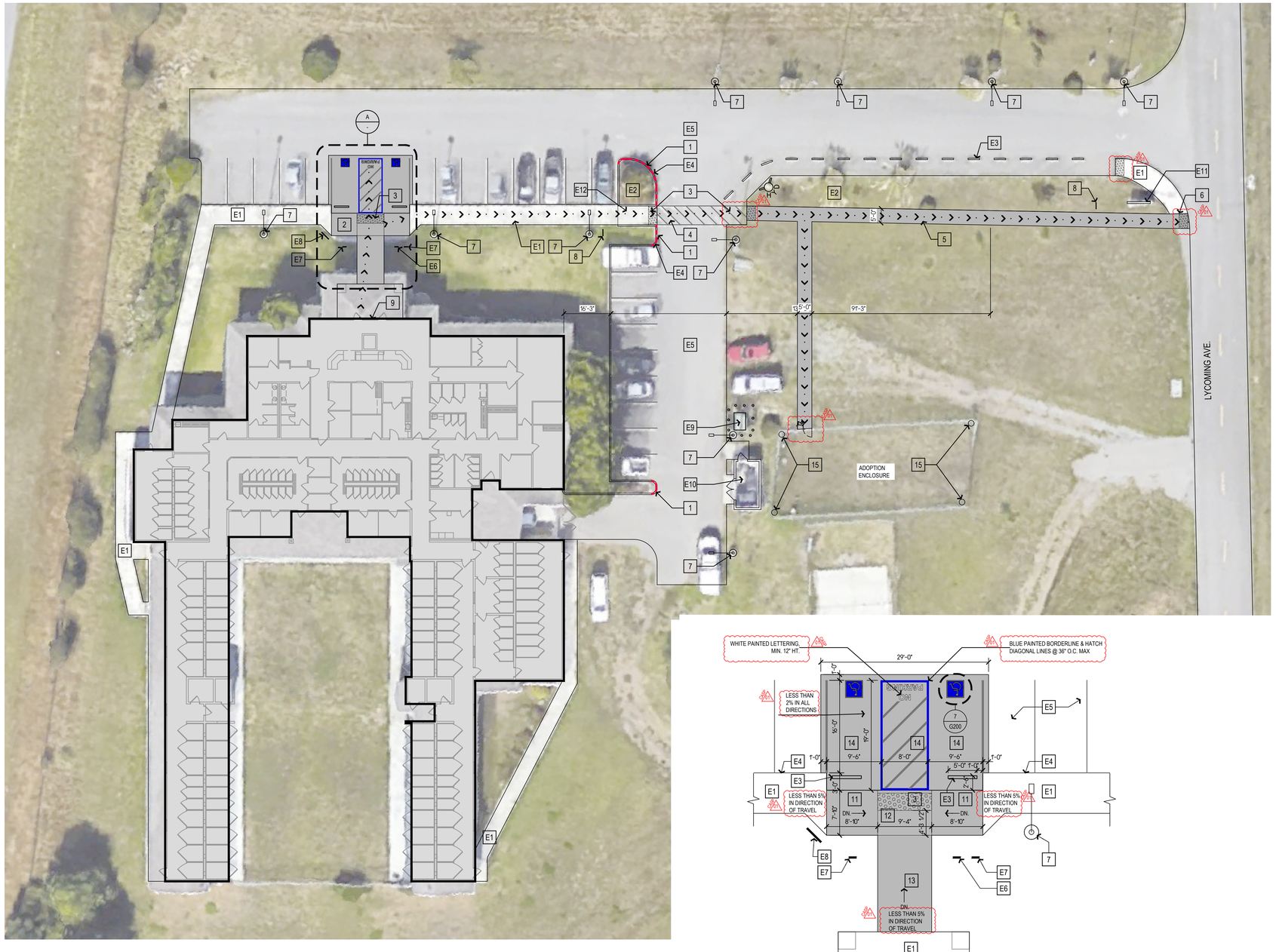

NEW SITE PLAN

SCALE: 1/16" = 1'-0"

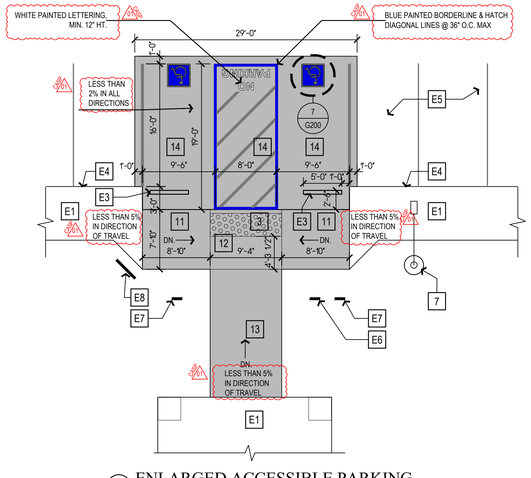

A ENLARGED ACCESSIBLE PARKING
1/8" = 1'-0"

PARKING CALCULATION

PARKING SPACE TYPE	SPACES		
	EXISTING	REQUIRED	PROPOSED
STANDARD SPACE	22		
ACCESSIBLE - STANDARD	1	1	
ACCESSIBLE - VAN	1		

PATH OF TRAVEL NOTES

1. PATH OF TRAVEL (P.O.T.), AS INDICATED, IS A COMMON, BARRIER-FREE ACCESS ROUTE WITHOUT ANY ABRUPT VERTICAL CHANGES EXCEEDING 1/2" BEVELED AT 1:2 MAXIMUM SLOPE, EXCEPT THAT LEVEL CHANGES DO NOT EXCEED 1/4" VERTICAL AND ARE AT LEAST 48" WIDE.
2. THE PATH SURFACE IS SLIP RESISTANT, STABLE, FIRM, AND SMOOTH. PASSING SPACES (11 B-403.5.3) AT LEAST 60" X 60" ARE LOCATED NOT MORE THAN 200' APART. PARTS OF P.O.T. WITH CONTINUOUS GRADIENTS HAVE 60" LEVEL AREAS (11B-403.7) NOT MORE THAN 400' APART.
3. THE CROSS-SLOPE DOES NOT EXCEED 2% AND SLOPE IN THE DIRECTION OF TRAVEL AND IS LESS THAN 5% UNLESS OTHERWISE INDICATED - SEE 1/G200
4. P.O.T. SHALL BE MAINTAINED FREE OF OVERHANGING OBSTRUCTIONS TO 80" MINIMUM (11B-307.4) AND PROTRUDING OBJECTS GREATER THAN 4" PROJECTION FROM WALL AND ABOVE 27" AND LESS THAN 80" (11 B-307.2).

KEYNOTES - EXISTING

E1	(E) CONCRETE WALK TO REMAIN
E2	(E) TREE TO REMAIN
E3	(E) CONC. WHEEL STOPS TO BE REINSTALLED AFTER NEW CONCRETE PARKING.
E4	(E) CURB & GUTTER TO REMAIN
E5	(E) ASPHALT TO REMAIN
E6	(E) ACCESSIBLE PARKING SIGNAGE PER 11B-502.6 TO REMAIN - SEE 4/G200.
E7	(E) TOWAWAY WARNING SIGN PER 11B-502.8.2 TO REMAIN - SEE 3/G200.
E8	(E) BIKE RACK TO REMAIN
E9	(E) TRANSFORMER TO REMAIN
E10	(E) TRASH ENCLOSURE TO REMAIN
E11	(E) MONUMENT SIGN TO REMAIN
E12	(E) CURB RAMP TO REMAIN

KEYNOTES - NEW

1	RED CURB WITH WHITE LETTERING "FIRE LANE, NO PARKING" - SEE 6/G200 FOR FIRE LANE MARKING REQUIREMENTS.
2	CONCRETE WALK - SEE ENLARGED DETAIL A THIS SHEET.
3	11B-247 CAST-IN-PLACE DETECTABLE WARNINGS - SEE 9/G200
4	MARKED CROSSING IN THE VEHICULAR WAY FOR ACCESSIBLE ROUTE, COMPLY WITH 11B-403. 4" WIDE WHITE LINES WITH CROSS HATCH PATTERN @ 3'-0" O.C.
5	5 FT WIDE CONC. SIDEWALK - ACCESSIBLE ROUTE TO THE PUBLIC WAY MAX. SLOPE 5% IN DIRECTION OF TRAVEL, MAX. CROSS-SLOPE 2% - SEE 1/G200
6	NEW SIDEWALK LEVEL TO MATCH EXISTING - SEE 1/G200
7	(E) LIGHT POST ON A ROUND CONC. PEDESTAL & FOUNDATION. REMOVE (E) SUPPORT PLATE & REUSE (E) BOLTS, OR CUT AND GRIND AND INSTALL (N) BOLTS FOR ANCHORING (N) LIGHT FIXTURE POLE - SEE 11/G200
8	"ACCESSIBLE PATH OF TRAVEL" SIGN 'C' PER 11B-216.4.3 - SEE 2/G200. MOUNT TO POLE.
9	INSTALL SIGN COMPLYING WITH BRAILLE REQUIREMENTS OF 11B-703 STATING "NO SMOKING WITHIN 25 FEET OF BUILDING ENTRIES, OUTDOOR AIR INTAKES AND OPERABLE WINDOWS", MOUNT TO WALL - SIGN TYPE 'N', SHT. A960.
10	NOT USED
11	CONC. CURB RAMP WITH 1:12 MAX. SLOPE IN DIRECTION OF TRAVEL AND 2% MAX. CROSS SLOPE
12	CONC. LANDING WITH 2% MAX. SLOPE IN ANY DIRECTION
13	CONC. WALK WITH 1:20 MAX. SLOPE IN DIRECTION OF TRAVEL AND 2% MAX. CROSS SLOPE
14	CONC. PARKING & ACCESSIBLE AISLE WITH 2% MAX. SLOPE IN ANY DIRECTION
15	REPLACE (E) POLE-MOUNTED LIGHTING WITH SOLAR-POWERED LED FIXTURE.

LEGEND

- ACCESSIBLE PARKING SPACE - SEE DETAIL 'A'
- 11B-247 DETECTABLE WARNING TRUNCATED DOMES - SEE 9/G200 FOR DETAILS
- (N) PARKING LOT LIGHT FIXTURE
- CURB PAINTED RED, MARKED IN WHITE "FIRE LANE, NO PARKING"
- 30" x 48" CLEAR FLOOR SPACE
- PRECAST CONCRETE WHEEL BUMPER - SEE 8/G200. PROVIDE 6 FT LONG BUMPER AT ALL VAN ACCESSIBLE REGULAR & EV PARKING SPACES.
- SIGNAGE AS INDICATED - GALVANIZED STEEL POLE SET IN CONCRETE PER DETAIL REFERENCED.
- ACCESSIBLE PATH OF TRAVEL - WIDTH, SURFACE CONDITIONS, CROSS SLOPE AND RUNNING SLOPE TO BE V.I.F.

Copyright © 2026

All ideas, designs, arrangements and plans indicated or represented by this drawing are owned by, and the property of, NICHOLS, MELBURG and ROSSETTO and were created, evolved and developed for use on, and in conjunction with, the specified project. None of such ideas, designs, arrangements and plans shall be used by or disclosed to any person, firm or corporation for any purpose whatsoever without the written permission of NICHOLS, MELBURG and ROSSETTO.

NICHOLS MELBURG & ROSSETTO
ARCHITECTS + ENGINEERS
300 KNOLLCREST DRIVE
REDDING, CA. 96002
(530) 222-3300 (530) 222-3538 FAX
http://www.nmrdesign.com

CONSULTANTS

LICENSE STAMPS

LICENSED ARCHITECT
DEVEN CARTER
C 34730
REN. 5/31/27
STATE OF CALIFORNIA

PROJECT NAME

RENOVATION FOR

Humboldt County Animal Shelter

980 Lycoming Ave
McKinleyville, CA 95519

SHEET TITLE

SITE PLAN

DRAWING STATUS

CONSTRUCTION DOCUMENTS

BLDG. DEPT. SUBMITTAL

REVISIONS

Sym.	Description	Date
3	CASP	2026-04-03

Drawn By	KAJ
Date Issued	04-03-2026
Scale	1/16" = 1'-0"
Project No.	17-6430

SHEET No.

A101

Login Name: TimS
Plot Date: April 03, 2026 - 10:09 am
File Name: N:\Projects\6000\Jobs\2017\7-6430 Humboldt County ADA Compliance\5 Animal Shelter\10 DWGs\17-6430-A101_AS-N-SITEPLN.dwg
SHEETS Scale 1:1 x 841.0 x 594.0

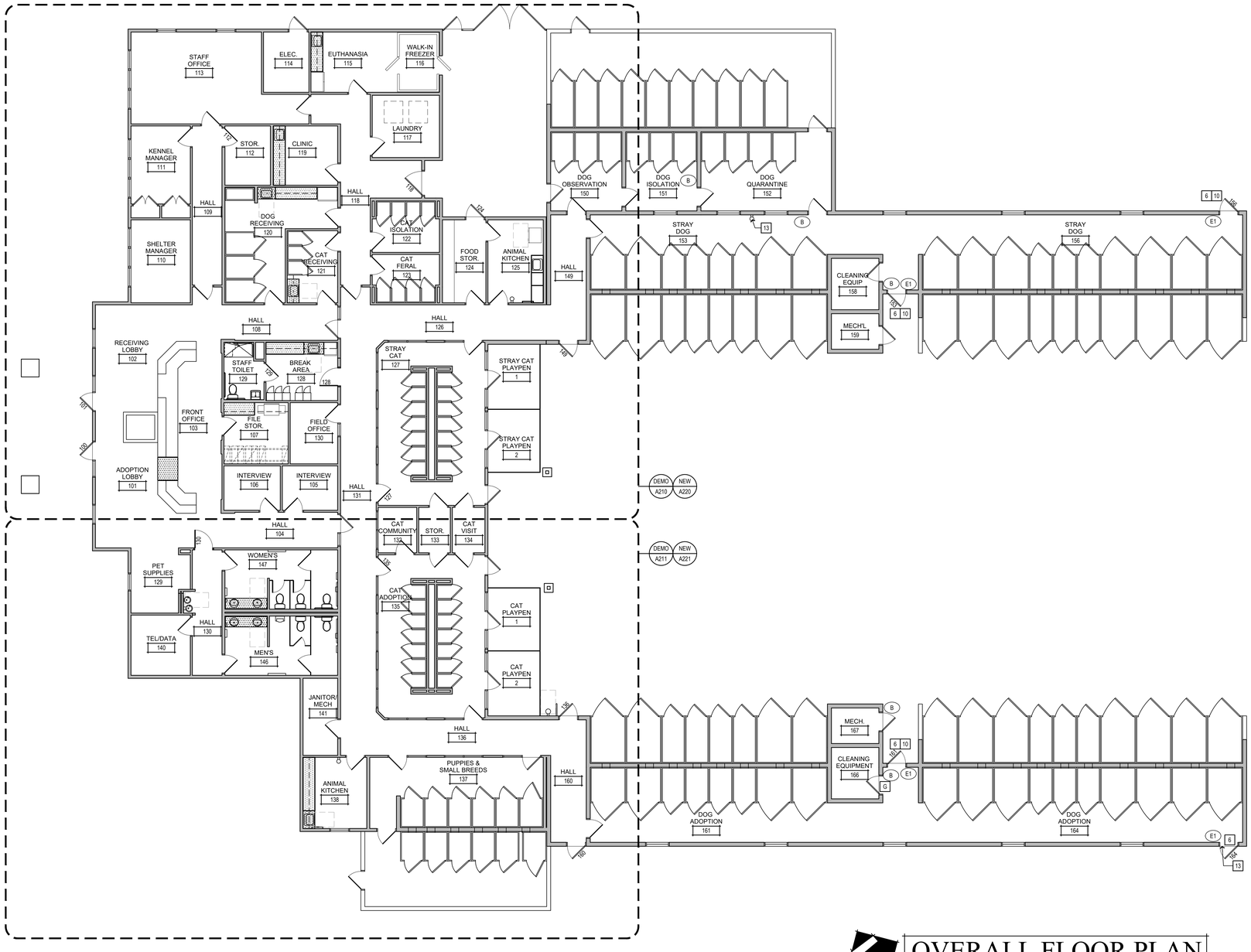

OVERALL FLOOR PLAN

SHOWING DEMO & NEW NOTES

SCALE: 1/8" = 1'-0"

GENERAL NOTES

1. SEE ENLARGED PLANS FOR DEMO & NEW NOTES WITHIN THOSE AREAS.
2. AT ALL PATCHES, REPAIRS, NEW PARTITIONS, ETC., MATCH (E) FINISHES AND PAINT OUT TO NEAREST WALL CORNER WITH PAINT TO MATCH (E).
3. ALL PERMANENT IDENTIFICATION OF ROOMS AND SPACES SHALL HAVE RAISED LETTERS AND BRAILLE IN CONFORMANCE WITH CODE SECTION 11B-703 - SEE BA960; TO BE O.F.O.I.
4. DOOR THRESHOLDS WHERE PROVIDED ARE TO BE 1/2" HIGH MAX. RAISED THRESHOLD; CHANGES IN LEVEL AT DOORWAYS SHALL COMPLY WITH A.D.A. AND C.B.C.
5. ANNULAR SPACES AROUND PIPES, ELECTRIC CABLES, CONDUITS OR OTHER OPENINGS IN PLATES AT EXTERIOR WALLS SHALL BE PROTECTED AGAINST THE PASSAGE OF RODENTS BY CLOSING SUCH OPENINGS WITH CEMENT MORTAR, CONCRETE MASONRY OR SIMILAR METHOD ACCEPTABLE TO THE ENFORCING AGENCY.
6. ALL GYP. BD. TO GET PREP COAT BEFORE FINAL COAT.
7. PROVIDE LOCKABLE (& RATED IF REQ'D) ACCESS PANEL WHERE REQUIRED TO ACCESS VALVES AND OTHER ITEM SHOWN ON MECH'L DWGS.

DEMO & (E) KEYNOTES

NOT ALL NOTES ARE USED ON THIS SHEET; SEE ALSO A210-211.

- A REMOVE (E) TOILET PARTITIONS AS SHOWN
- B REMOVE (E) COUNTERTOP & LAVATORIES; PREPARE FOR INSTALLATION OF (N) COUNTER & LAV.
- C REMOVE (E) PLUMBING FIXTURE AS SHOWN
- D REMOVE INDICATED SECTION OF WALL
- E REMOVE (E) ACCESSORIES AS SHOWN
- F REVISE (E) S.S. SINK - LOWER RIM BY 6"
- G REMOVE (E) SIGNAGE NON-COMPLIANT SIGNAGE
- H REMOVE (E) WALL FINISHES, PREP FOR (N) WALL FINISHES
- J REMOVE (E) GRAB BAR(S)
- K REMOVE (E) SIGNAGE WITH SHARP OR ABRASIVE EDGES, AND DOOR-MOUNTED SIGNAGE WITH RAISED TEXT OR BRAILLE
- L REMOVE (E) FLOORING, PREP SUBFLOOR FOR (N) FLOORING
- M REMOVE (E) DOOR AND FRAME; PREPARE OPENING FOR (N) DOOR AND FRAME.
- N REMOVE (E) SECTION OF TRANSACTION COUNTER THAT IS TOO HIGH; PREPARE FOR INSTALLATION OF (N) SECTION
- P REMOVE (E) WALL CABINET SINCE LOWEST SHELF IS MORE THAN 48" AFF PER CBC 11B-811.3.
- Q THIS ROOM NOT IN SCOPE OF WORK
- R REMOVE (E) COUNTERTOP & SINK; PRESERVE SECTION OF CASEWORK BEYOND REQ'D KNEE CLEARANCE; PREPARE FOR INSTALLATION OF (N) COUNTER & SINK.
- S REMOVE (E) NON-COMPLIANT DOORSTOP PER CBC 11B-404.2.10
- T REMOVE (E) SHELF OR SHELVES, PATCH WALL DAMAGE & PAINT TO MATCH (E) WALL.

KEYNOTES

NOT ALL NOTES ARE USED ON THIS SHEET; SEE ALSO A220-221.

1. (N) NON-RATED PARTITION; MATCH EXISTING.
2. RELOCATED TOILET PARTITION & DOORS TO PROVIDE PULL SIDE CLEARANCE ON ACCESSIBLE STALL, AS INDICATED.
3. (N) ACCESSIBLE COUNTERTOP & LAVATORY - SEE 4/A940
4. (E) S.S. SINK LOWERED BY 6". EXTEND S.S. SURROUND IF REQ'D.
5. (N) ACCESSIBLE COUNTERTOP & SINK - SEE 3/A940
6. ADJUST DOOR CLOSER TO HAVE MIN. 5 SECOND SWEEP PERIOD/BACK CHECK PER CBC 11B-404.2.8.1.
7. (N) ACCESSIBLE TRANSACTION COUNTER - SEE 1/A940
8. PRIOR TO INSTALLATION OF (N) FLOOR, LEVEL AS REQ'D TO ACHIEVE 2% OR LESS SLOPE PER CBC 11B-302.1.
9. ADJUST (E) CLOTHING TO HOOK TO BE 48" AFF MAX.
10. ADJUST DOOR PUSHING, PULLING, OR SLIDING OPENING FORCE TO BE 5 LB MAX. PER CBC 11B-404.2.9.
11. RELOCATE (E) FIRE EXTINGUISHER OUT OF DOOR PULL SIDE CLEARANCE (IF APPLIC.) AND MOUNT SO THAT BOT. OF EXTINGUISHER IS 27" OR LESS AFF PER CBC 11B-307.2
12. RELOCATE (E) TOWEL BAR AND MOUNT SO THAT IT'S 48" MAX. AFF PER CBC 11B-308.2.1
13. REMOVE (E) DOOR THRESHOLD AND PROVIDE ONE COMPLIANT WITH CBC 11B-404.2.5
14. ADJUST (E) EYEWASH STATION HEIGHT SO THAT WASH OUTLETS ARE AT 34" AFF, COMPLIANT WITH CBC 11B-902.3.

LEGEND

- RESTROOM ACCESSORY - SEE SCHEDULE ON A700
- SIGNAGE - SEE SHT. A960 FOR TYPE
- EXISTING DOOR TO REMAIN, PROVIDE NEW HARDWARE PER SCHEDULE ON A710
- EXISTING DOOR & FRAME TO BE REMOVED, PREPARE FOR (N) CONFIGURATION
- EXISTING WALL TO BE REMOVED, PREPARE FOR (N) CONSTRUCTION
- (N) DOOR - SEE SCHEDULE ON A710
- (E) CASEWORK AND SINK/PLUMBING TO BE REMOVED; PREPARE FOR (N) CONFIG.
- 60" DIAMETER ACCESSIBLE CLEAR TURNING RADIUS TO BE MAINTAINED AT ALL TIMES
- 30" x 48" ACCESSIBLE CLEAR SPACE TO BE MAINTAINED AT ALL TIMES
- (N) CASEWORK AND SINK, IF INDICATED

Copyright © 2025

All ideas, designs, arrangements and plans indicated or represented by this drawing are owned by, and the property of, NICHOLS, MELBURG and ROSSETTO and were created, evolved and developed for use on, and in conjunction with, the specified project. None of such ideas, designs, arrangements and plans shall be used, or disclosed to any person, firm or corporation for any purpose whatsoever without the written permission of NICHOLS, MELBURG and ROSSETTO.

NICHOLS MELBURG & ROSSETTO
ARCHITECTS + ENGINEERS
300 KNOLLCREST DRIVE
REDDING, CA. 96002
(530) 222-3300 (530) 222-3538 FAX
http://www.nmrdesign.com

CONSULTANTS

LICENSE STAMPS

LICENSED ARCHITECT
DEVEN CARTER
C 34730
REN. 5/31/27
STATE OF CALIFORNIA

PROJECT NAME

RENOVATION FOR

Humboldt County Animal Shelter

980 Lycoming Ave
McKinleyville, CA 95519

SHEET TITLE

OVERALL FLOOR PLAN

DRAWING STATUS

CONSTRUCTION DOCUMENTS

BLDG. DEPT. SUBMITTAL

REVISIONS

Sym.	Description	Date

Drawn By	KAJ
Date Issued	04-03-2026
Scale	1/8" = 1'-0"
Project No.	17-6430

SHEET No.

A200

Login Name: Kurt.J
Plot Date: December 01, 2025 - 10:53 am
File Name: K:\Projects\6000-Jobs\007\17-6430 Humboldt County ADA Compliance\5 Animal Shelter\10 DWGs\17-6430-A200_ASF-FLPR.Undwg
SHEETS: 1 of 52 Section : A-FS-E

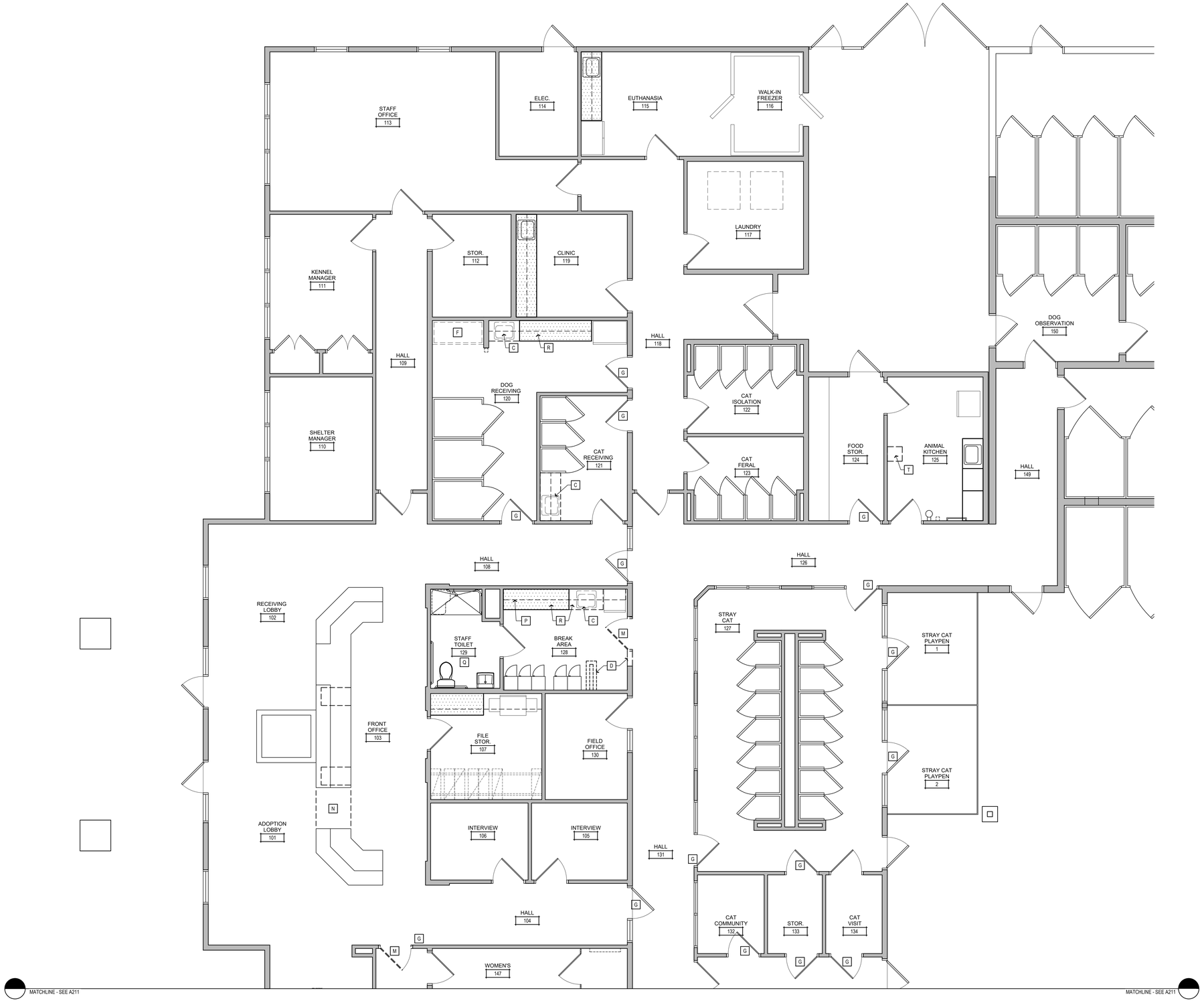

PARTIAL DEMO. FLOOR PLAN

SCALE: 1/4 = 1'-0"

GENERAL NOTES

1. AT ALL PATCHES, REPAIRS, NEW PARTITIONS, ETC., MATCH (E) FINISHES AND PAINT OUT TO NEAREST WALL CORNER WITH PAINT TO MATCH (E).
2. ALL PERMANENT IDENTIFICATION OF ROOMS AND SPACES SHALL HAVE RAISED LETTERS AND BRAILLE IN CONFORMANCE WITH CODE SECTION 11B-703 - SEE A960; TO BE O.F.O.I.
3. DOOR THRESHOLDS WHERE PROVIDED ARE TO BE 1/2" HIGH MAX. RAISED THRESHOLD; CHANGES IN LEVEL AT DOORWAYS SHALL COMPLY WITH A.D.A. AND C.B.C.
4. ANNULAR SPACES AROUND PIPES, ELECTRIC CABLES, CONDUITS OR OTHER OPENINGS IN PLATES AT EXTERIOR WALLS SHALL BE PROTECTED AGAINST THE PASSAGE OF RODENTS BY CLOSING SUCH OPENINGS WITH CEMENT MORTAR, CONCRETE MASONRY OR SIMILAR METHOD ACCEPTABLE TO THE ENFORCING AGENCY.
5. ALL GYP. BD. TO GET PREP COAT BEFORE FINAL COAT.
6. PROVIDE LOCKABLE (& RATED IF REQ'D) ACCESS PANEL WHERE REQUIRED TO ACCESS VALVES AND OTHER ITEM SHOWN ON MECHL DWGS.
7. DOOR NUMBERS OF (E) DOORS REQUIRING MODIFICATION OR (N) DOORS ARE FOUND ON SHT A200.

DEMO & (E) KEYNOTES

A	REMOVE (E) TOILET PARTITIONS AS SHOWN
B	REMOVE (E) COUNTERTOP & LAVATORIES; PREPARE FOR INSTALLATION OF (N) COUNTER & LAV.
C	REMOVE (E) PLUMBING FIXTURE AS SHOWN
D	REMOVE INDICATED SECTION OF WALL
E	REMOVE (E) ACCESSORIES AS SHOWN
F	REVISE (E) S.S. SINK - LOWER RIM BY 6"
G	REMOVE (E) SIGNAGE NON-COMPLIANT SIGNAGE
H	REMOVE (E) WALL FINISHES, PREP FOR (N) WALL FINISHES
J	REMOVE (E) GRAB BAR(S)
K	REMOVE (E) SIGNAGE WITH SHARP OR ABRASIVE EDGES, AND DOOR-MOUNTED SIGNAGE WITH RAISED TEXT OR BRAILLE
L	REMOVE (E) FLOORING, PREP SUBFLOOR FOR (N) FLOORING
M	REMOVE (E) DOOR AND FRAME; PREPARE OPENING FOR (N) DOOR AND FRAME.
N	REMOVE (E) SECTION OF TRANSACTION COUNTER THAT IS TOO HIGH; PREPARE FOR INSTALLATION OF (N) SECTION
P	REMOVE (E) WALL CABINET SINCE LOWEST SHELF IS MORE THAN 48" AFF PER CBC 11B-811.3.
Q	THIS ROOM NOT IN SCOPE OF WORK
R	REMOVE (E) COUNTERTOP & SINK; PRESERVE SECTION OF CASEWORK BEYOND REQ'D KNEE CLEARANCE; PREPARE FOR INSTALLATION OF (N) COUNTER & SINK.
S	REMOVE (E) NON-COMPLIANT DOORSTOP PER CBC 11B-404.2.10
T	REMOVE (E) SHELF OR SHELVES, PATCH WALL DAMAGE & PAINT TO MATCH (E) WALL.

LEGEND

EXISTING DOOR TO REMAIN - SEE A200 FOR DOOR # AND PROVIDE NEW HARDWARE PER SCHEDULE ON A710

EXISTING DOOR & FRAME TO BE REMOVED, PREPARE FOR (N) CONFIGURATION

EXISTING WALL TO BE REMOVED, PREPARE FOR (N) CONSTRUCTION

(E) CASEWORK AND SINK/PLUMBING TO BE REMOVED; PREPARE FOR (N) CONFIG.

Copyright © 2026

All ideas, designs, arrangements and plans indicated or represented by this drawing are owned by, and the property of, NICHOLS, MELBURG and ROSSETTO and were created, evolved and developed for use on, and in conjunction with, the specified project. None of such ideas, designs, arrangements and plans shall be used by or disclosed to any person, firm or corporation for any purpose whatsoever without the written permission of NICHOLS, MELBURG and ROSSETTO.

NICHOLS MELBURG & ROSSETTO
ARCHITECTS + ENGINEERS
300 KNOLLCREST DRIVE
REDDING, CA. 96002
(530) 222-3300 (530) 222-3538 FAX
http://www.nmrdesign.com

CONSULTANTS

LICENSE STAMPS

LICENSED ARCHITECT
DEVEN CARTER
C 34730
REN. 5/31/27
STATE OF CALIFORNIA

PROJECT NAME

RENOVATION FOR

Humboldt County Animal Shelter

980 Lycoming Ave
McKinleyville, CA 95519

SHEET TITLE

ENLARGED PARTIAL PLAN - DEMO

DRAWING STATUS

CONSTRUCTION DOCUMENTS

BLDG. DEPT. SUBMITTAL

REVISIONS

Sym.	Description	Date
1	CASP	2026-04-03

Drawn By	KAJ
Date Issued	04-03-2026
Scale	1/4" = 1'-0"
Project No.	17-6430

SHEET No.

A210

Login Name: Kurt_J
Plot Date: December 01, 2025 - 10:56 am
File Name: K:\Projects\6000\Arch\2017\17-6430 Humboldt County ADA Compliance\5 Animal Shelter\10 DWGs\17-6430-5-A210-PTL-A3-D-ENLGRL\Ldwg
STATUS: KAJ_DocPrep1 : KAJ-B1 : KAJ_Delta8

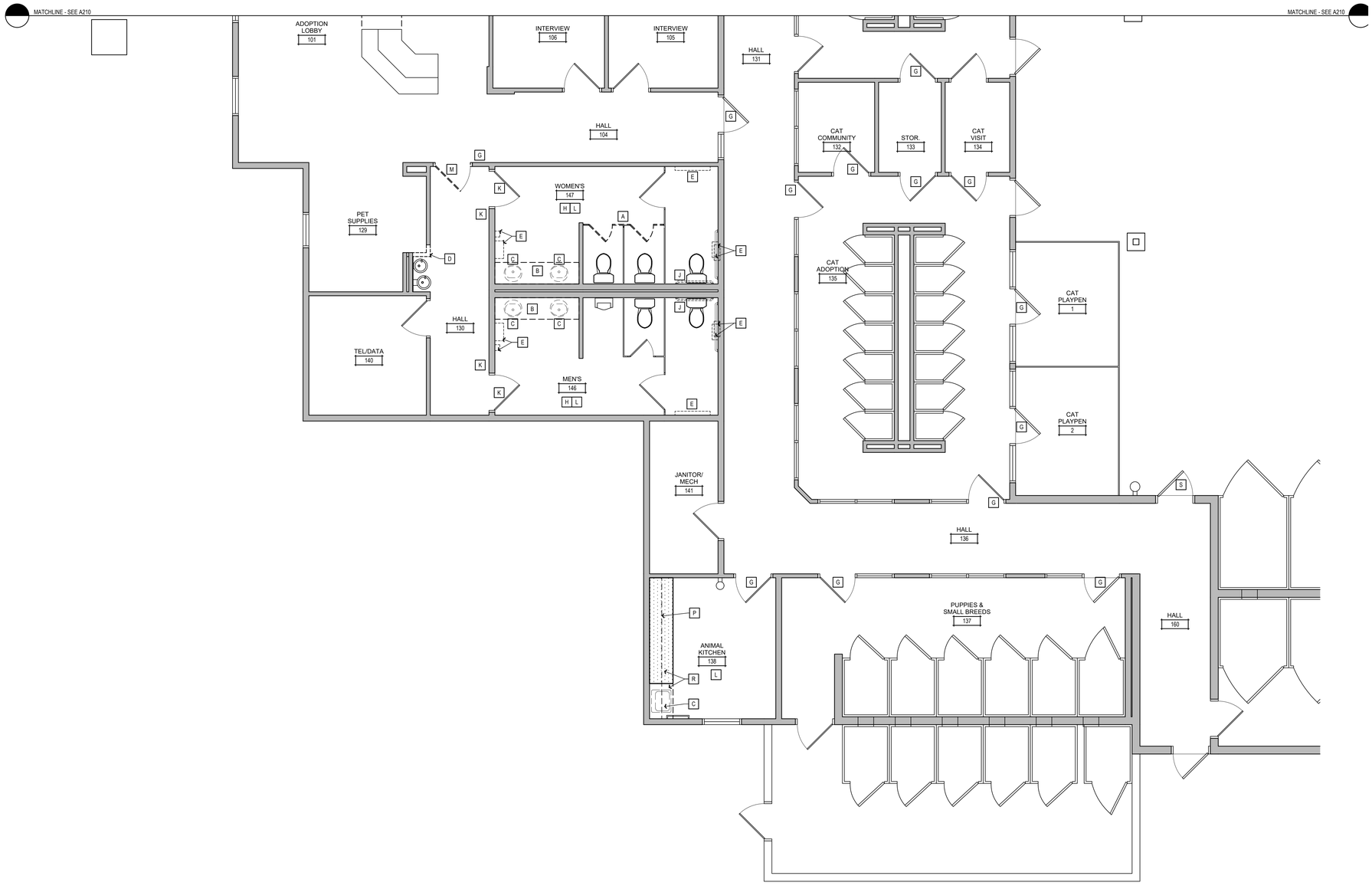

PARTIAL DEMO. FLOOR PLAN

SCALE: 1/4 = 1'-0"

GENERAL NOTES

1. AT ALL PATCHES, REPAIRS, NEW PARTITIONS, ETC., MATCH (E) FINISHES AND PAINT OUT TO NEAREST WALL CORNER WITH PAINT TO MATCH (E).
2. ALL PERMANENT IDENTIFICATION OF ROOMS AND SPACES SHALL HAVE RAISED LETTERS AND BRAILLE IN CONFORMANCE WITH CODE SECTION 11B-703 - SEE A960; TO BE O.F.O.I.
3. DOOR THRESHOLDS WHERE PROVIDED ARE TO BE 1/2" HIGH MAX. RAISED THRESHOLD; CHANGES IN LEVEL AT DOORWAYS SHALL COMPLY WITH A.D.A. AND C.B.C.
4. ANNULAR SPACES AROUND PIPES, ELECTRIC CABLES, CONDUITS OR OTHER OPENINGS IN PLATES AT EXTERIOR WALLS SHALL BE PROTECTED AGAINST THE PASSAGE OF RODENTS BY CLOSING SUCH OPENINGS WITH CEMENT MORTAR, CONCRETE MASONRY OR SIMILAR METHOD ACCEPTABLE TO THE ENFORCING AGENCY.
5. ALL GYP. BD. TO GET PREP COAT BEFORE FINAL COAT.
6. PROVIDE LOCKABLE (& RATED IF REQ'D) ACCESS PANEL WHERE REQUIRED TO ACCESS VALVES AND OTHER ITEM SHOWN ON MECHL DWGS.
7. DOOR NUMBERS OF (E) DOORS REQUIRING MODIFICATION OR (N) DOORS ARE FOUND ON SHT A200.

DEMO & (E) KEYNOTES

A	REMOVE (E) TOILET PARTITIONS AS SHOWN
B	REMOVE (E) COUNTERTOP & LAVATORIES; PREPARE FOR INSTALLATION OF (N) COUNTER & LAV.
C	REMOVE (E) PLUMBING FIXTURE AS SHOWN
D	REMOVE INDICATED SECTION OF WALL
E	REMOVE (E) ACCESSORIES AS SHOWN
F	REVISE (E) S.S. SINK - LOWER RIM BY 6"
G	REMOVE (E) SIGNAGE NON-COMPLIANT SIGNAGE
H	REMOVE (E) WALL FINISHES, PREP FOR (N) WALL FINISHES
J	REMOVE (E) GRAB BAR(S)
K	REMOVE (E) SIGNAGE WITH SHARP OR ABRASIVE EDGES, AND DOOR-MOUNTED SIGNAGE WITH RAISED TEXT OR BRAILLE
L	REMOVE (E) FLOORING, PREP SUBFLOOR FOR (N) FLOORING
M	REMOVE (E) DOOR AND FRAME; PREPARE OPENING FOR (N) DOOR AND FRAME.
N	REMOVE (E) SECTION OF TRANSACTION COUNTER THAT IS TOO HIGH; PREPARE FOR INSTALLATION OF (N) SECTION
P	REMOVE (E) WALL CABINET SINCE LOWEST SHELF IS MORE THAN 48" AFF PER CBC 11B-811.3.
Q	THIS ROOM NOT IN SCOPE OF WORK
R	REMOVE (E) COUNTERTOP & SINK; PRESERVE SECTION OF CASEWORK BEYOND REQ'D KNEE CLEARANCE; PREPARE FOR INSTALLATION OF (N) COUNTER & SINK.
S	REMOVE (E) NON-COMPLIANT DOORSTOP PER CBC 11B-404.2.10
T	REMOVE (E) SHELF OR SHELVES, PATCH WALL DAMAGE & PAINT TO MATCH (E) WALL.

LEGEND

EXISTING DOOR TO REMAIN - SEE A200 FOR DOOR # AND PROVIDE NEW HARDWARE PER SCHEDULE ON A710

EXISTING DOOR & FRAME TO BE REMOVED, PREPARE FOR (N) CONFIGURATION

EXISTING WALL TO BE REMOVED, PREPARE FOR (N) CONSTRUCTION

(E) CASEWORK AND SINK/PLUMBING TO BE REMOVED; PREPARE FOR (N) CONFIG.

Copyright © 2026

All ideas, designs, arrangements and plans indicated or represented by this drawing are owned by, and the property of, NICHOLS, MELBURG and ROSSETTO and were created, evolved and developed for use on, and in conjunction with, the specified project. None of such ideas, designs, arrangements and plans shall be used by or disclosed to any person, firm or corporation for any purpose whatsoever without the written permission of NICHOLS, MELBURG and ROSSETTO.

NICHOLS MELBURG & ROSSETTO
ARCHITECTS + ENGINEERS
300 KNOLLCREST DRIVE
REDDING, CA. 96002
(530) 222-3300 (530) 222-3538 FAX
http://www.nmrdesign.com

CONSULTANTS

LICENSE STAMPS

LICENSED ARCHITECT
DEVEN PARTRIDGE
C 34730
REN. 5/31/27
STATE OF CALIFORNIA

PROJECT NAME

RENOVATION FOR

Humboldt County Animal Shelter

980 Lycoming Ave
McKinleyville, CA 95519

SHEET TITLE

ENLARGED PARTIAL PLAN - DEMO

DRAWING STATUS

CONSTRUCTION DOCUMENTS

BLDG. DEPT. SUBMITTAL

REVISIONS

Sym.	Description	Date
3/01	CASP	2026-04-03

Drawn By	KAJ
Date Issued	04-03-2026
Scale	1/4" = 1'-0"
Project No.	17-6430

SHEET No.

A211

Login Name: kurt_j
Plot Date: December 01, 2025 - 10:59 am
File Name: N:\Projects\6000\Clients\17-6430 Humboldt County ADA Compliance\5 Animal Shelter\10 DWGs\17-6430\5-A210-211_A3-D-ENLGPLN.dwg
Plotted by: Kurt Jacobsen | 1/4=1'-0" | 1=1-A3_new.pltt

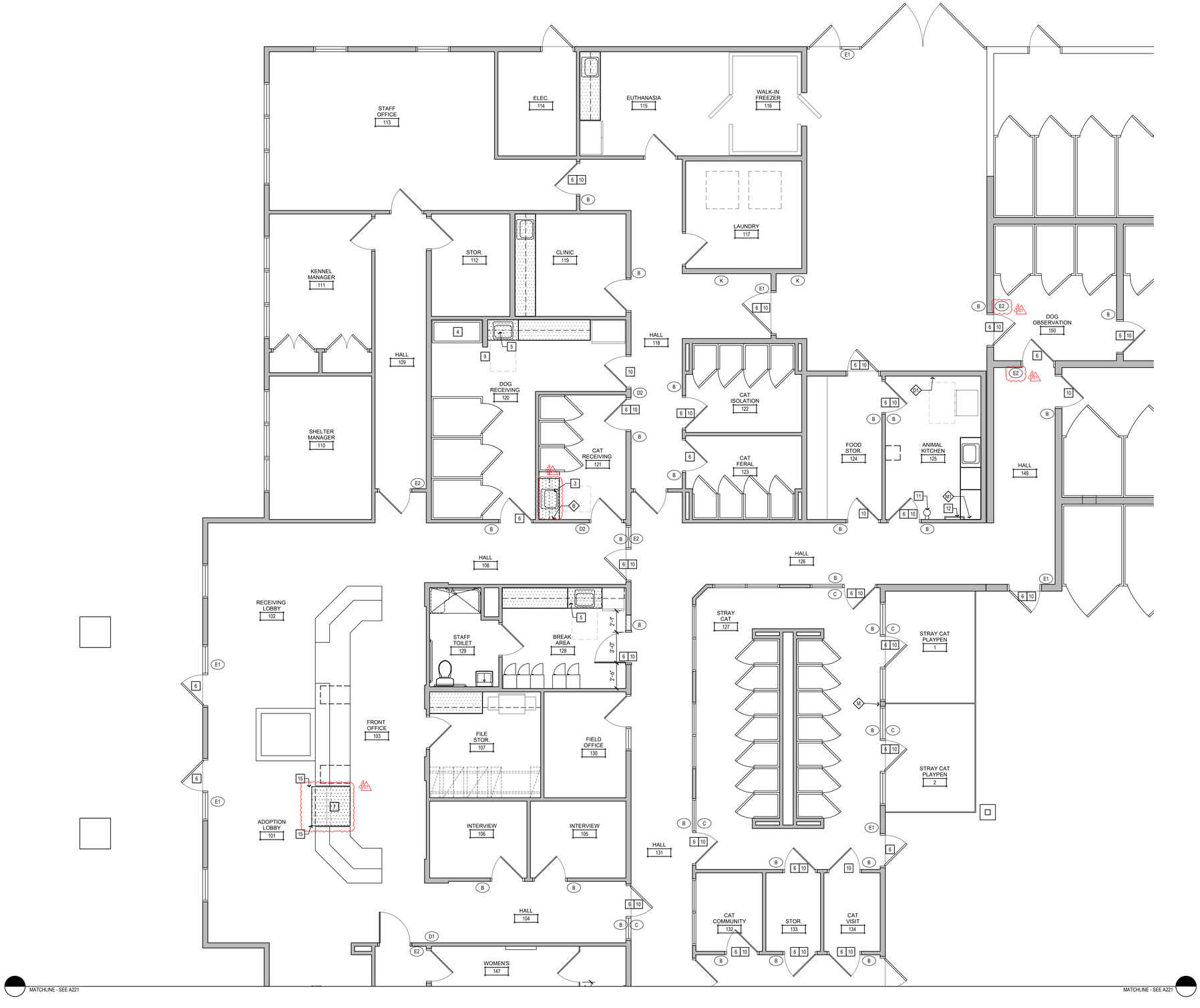

PARTIAL NEW FLOOR PLAN

SCALE: 1/4 = 1'-0"

GENERAL NOTES

1. AT ALL PATCHES, REPAIRS, NEW PARTITIONS, ETC., MATCH (E) FINISHES AND PAINT OUT TO NEAREST WALL CORNER WITH PAINT TO MATCH (E).
2. ALL PERMANENT IDENTIFICATION OF ROOMS AND SPACES SHALL HAVE RAISED LETTERS AND BRAILLE IN CONFORMANCE WITH CODE SECTION 11B-703 - SEE A960; TO BE O.F.O.I.
3. DOOR THRESHOLDS WHERE PROVIDED ARE TO BE 1/2" HIGH MAX. RAISED THRESHOLD; CHANGES IN LEVEL AT DOORWAYS SHALL COMPLY WITH A.D.A. AND C.B.C.
4. ANNULAR SPACES AROUND PIPES, ELECTRIC CABLES, CONDUITS OR OTHER OPENINGS IN PLATES AT EXTERIOR WALLS SHALL BE PROTECTED AGAINST THE PASSAGE OF RODENTS BY CLOSING SUCH OPENINGS WITH CEMENT MORTAR, CONCRETE MASONRY OR SIMILAR METHOD ACCEPTABLE TO THE ENFORCING AGENCY.
5. ALL GYP. BD. TO GET PREP COAT BEFORE FINAL COAT.
6. PROVIDE LOCKABLE (& RATED IF REQ'D) ACCESS PANEL WHERE REQUIRED TO ACCESS VALVES AND OTHER ITEM SHOWN ON MECHL DWGS.
7. DOOR NUMBERS OF (E) DOORS REQUIRING MODIFICATION OR (N) DOORS ARE FOUND ON SHT A200.

KEYNOTES

1. (N) NON-RATED PARTITION; MATCH EXISTING.
2. RELOCATED TOILET PARTITION & DOORS TO PROVIDE PULL SIDE CLEARANCE ON ACCESSIBLE STALL, AS INDICATED.
3. (N) ACCESSIBLE COUNTERTOP & LAVATORY - SEE 4/A940
4. (E) S.S. SINK LOWERED BY 6". EXTEND S.S. SURROUND IF REQ'D.
5. (N) ACCESSIBLE COUNTERTOP & SINK - SEE 3/A940
6. ADJUST DOOR CLOSER TO HAVE MIN. 5 SECOND SWEEP PERIOD/BACK CHECK PER CBC 11B-404.2.8.1.
7. (N) ACCESSIBLE TRANSACTION COUNTER - SEE 1/A940
8. PRIOR TO INSTALLATION OF (N) FLOOR, LEVEL AS REQ'D TO ACHIEVE 2% OR LESS SLOPE PER CBC 11B-302.1.
9. ADJUST (E) CLOTHING TO HOOK TO BE 48" AFF MAX.
10. ADJUST DOOR PUSHING, PULLING, OR SLIDING OPENING FORCE TO BE 5 LB MAX. PER CBC 11B-404.2.9
11. RELOCATE (E) FIRE EXTINGUISHER OUT OF DOOR PULL SIDE CLEARANCE (IF APPLIC.) AND MOUNT SO THAT BOT. OF EXTINGUISHER IS 27" OR LESS AFF PER CBC 11B-307.2
12. RELOCATE (E) TOWEL BAR AND MOUNT SO THAT IT'S 48" MAX. AFF PER CBC 11B-308.2.1
13. REMOVE (E) DOOR THRESHOLD AND PROVIDE ONE COMPLIANT WITH CBC 11B-404.2.5
14. ADJUST (E) EYEWASH STATION HEIGHT SO THAT WASH OUTLETS ARE AT 34" AFF.
15. FINISH ENDS OF TRANSACTION COUNTER & RETURN TO (E) CASEWORK.

LEGEND

- RESTROOM ACCESSORY - SEE SCHEDULE ON A700
- SIGNAGE - SEE SHT. A960 FOR TYPE
- EXISTING DOOR TO REMAIN - SEE A200 FOR DOOR # AND PROVIDE NEW HARDWARE PER SCHEDULE ON A710
- (N) DOOR - SEE A200 FOR DOOR # AND SEE SCHEDULE ON A710
- (N) WALL
- 60" DIAMETER ACCESSIBLE CLEAR TURNING RADIUS TO BE MAINTAINED AT ALL TIMES
- 30" x 48" ACCESSIBLE CLEAR SPACE TO BE MAINTAINED AT ALL TIMES
- (N) CASEWORK AND SINK, IF INDICATED

Copyright © 2026

All ideas, designs, arrangements and plans indicated or represented by this drawing are owned by, and the property of, NICHOLS, MELBURG and ROSSETTO and were created, evolved and developed for use on, and in conjunction with, the specified project. None of such ideas, designs, arrangements and plans shall be used by or disclosed to any person, firm or corporation for any purpose whatsoever without the written permission of NICHOLS, MELBURG and ROSSETTO.

NICHOLS MELBURG & ROSSETTO
ARCHITECTS + ENGINEERS
300 KNOLLCREST DRIVE
REDDING, CA. 96002
(530) 222-3300 (530) 222-3538 FAX
http://www.nmrdesign.com

CONSULTANTS

LICENSE STAMPS

LICENSED ARCHITECT
DEVEN CARTER
C 34730
REN. 5/31/27
STATE OF CALIFORNIA

PROJECT NAME

RENOVATION FOR

Humboldt County Animal Shelter

980 Lycoming Ave
McKinleyville, CA 95519

SHEET TITLE

ENLARGED PARTIAL PLAN - NEW WORK

DRAWING STATUS

CONSTRUCTION DOCUMENTS

BLDG. DEPT. SUBMITTAL

REVISIONS

Sym.	Description	Date
01	CASP	2026-04-03

Drawn By	KAJ
Date Issued	04-03-2026
Scale	1/4" = 1'-0"
Project No.	17-6430

SHEET No.

A220

Login Name: TimS
Plot Date: April 02, 2026 - 11:18 am
File Name: N:\Projects\6000-6444\2017\17-6430 Humboldt County ADA Compliance\5 Animal Shelter\10 DWGs\17-6430-E-A220-221_AS-H-ENLGR1.N.dwg
XREFS: N:\LS_Base\Base1; N:\Xref; N:\LS_Base\Xref

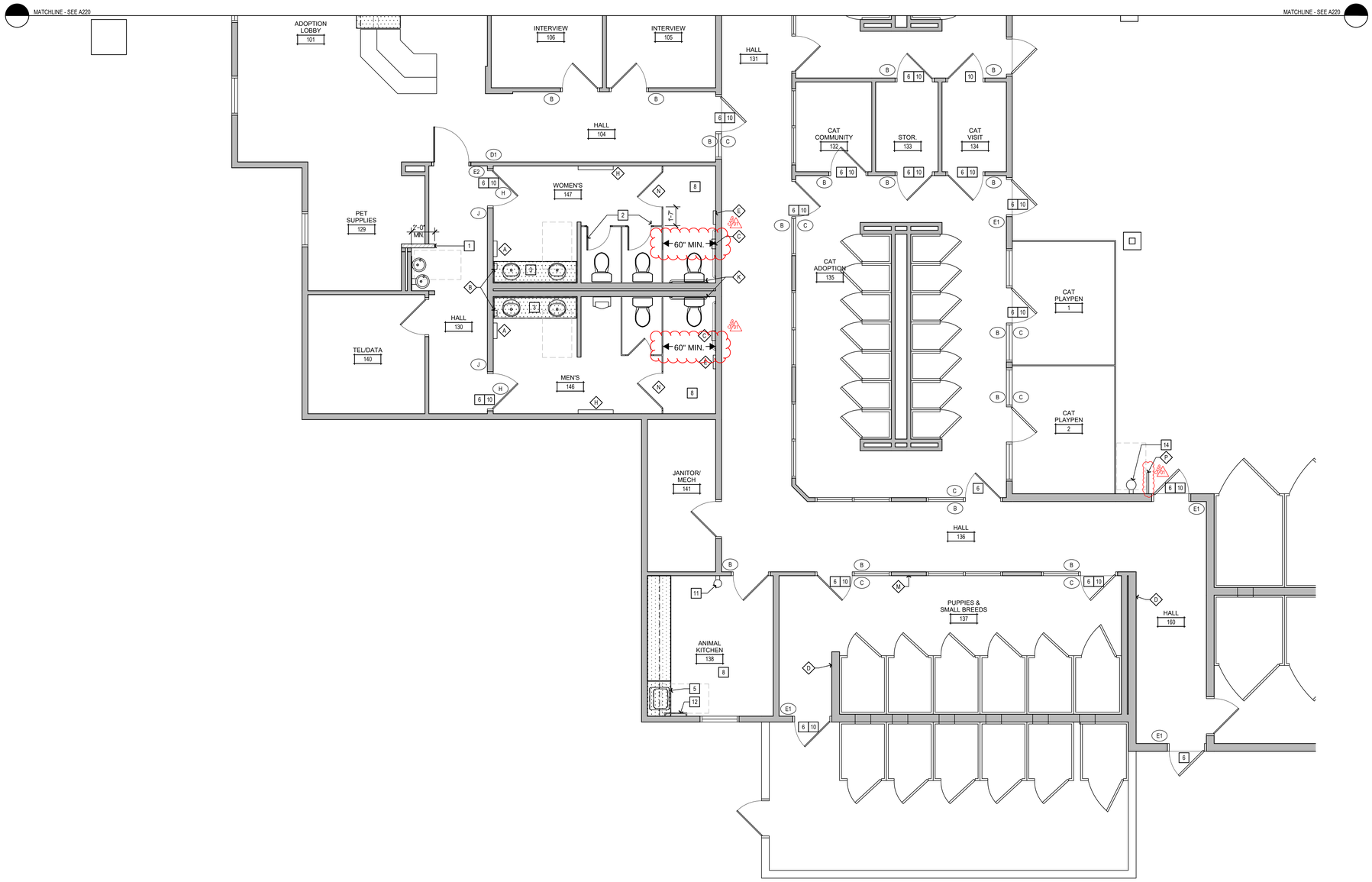

PARTIAL NEW FLOOR PLAN

SCALE: 1/4 = 1'-0"

GENERAL NOTES

1. AT ALL PATCHES, REPAIRS, NEW PARTITIONS, ETC., MATCH (E) FINISHES AND PAINT OUT TO NEAREST WALL CORNER WITH PAINT TO MATCH (E).
2. ALL PERMANENT IDENTIFICATION OF ROOMS AND SPACES ~~SHALL HAVE~~ RAISED LETTERS AND BRAILLE IN CONFORMANCE WITH CODE SECTION 11B-703 - SEE A960; TO BE O.F.O.I.
3. DOOR THRESHOLDS WHERE PROVIDED ARE TO BE 1/2" HIGH MAX. RAISED THRESHOLD; CHANGES IN LEVEL AT DOORWAYS SHALL COMPLY WITH A.D.A. AND C.B.C.
4. ANNULAR SPACES AROUND PIPES, ELECTRIC CABLES, CONDUITS OR OTHER OPENINGS IN PLATES AT EXTERIOR WALLS SHALL BE PROTECTED AGAINST THE PASSAGE OF RODENTS BY CLOSING SUCH OPENINGS WITH CEMENT MORTAR, CONCRETE MASONRY OR SIMILAR METHOD ACCEPTABLE TO THE ENFORCING AGENCY.
5. ALL GYP. BD. TO GET PREP COAT BEFORE FINAL COAT.
6. PROVIDE LOCKABLE (& RATED IF REQ'D) ACCESS PANEL WHERE REQUIRED TO ACCESS VALVES AND OTHER ITEM SHOWN ON MECHL DWGS.
7. DOOR NUMBERS OF (E) DOORS REQUIRING MODIFICATION OR (N) DOORS ARE FOUND ON SHT A200.

KEYNOTES

1. (N) NON-RATED PARTITION; MATCH EXISTING.
2. RELOCATED TOILET PARTITION & DOORS TO PROVIDE PULL SIDE CLEARANCE ON ACCESSIBLE STALL, AS INDICATED.
3. (N) ACCESSIBLE COUNTERTOP & LAVATORY - SEE 4/A940
4. (E) S.S. SINK LOWERED BY 6". EXTEND S.S. SURROUND IF REQ'D.
5. (N) ACCESSIBLE COUNTERTOP & SINK - SEE 3/A940
6. ADJUST DOOR CLOSER TO HAVE MIN. 5 SECOND SWEEP PERIOD/BACK CHECK PER CBC 11B-404.2.8.1.
7. (N) ACCESSIBLE TRANSACTION COUNTER - SEE 1/A940
8. PRIOR TO INSTALLATION OF (N) FLOOR, LEVEL AS REQ'D TO ACHIEVE 2% OR LESS SLOPE PER CBC 11B-302.1.
9. ADJUST (E) CLOTHING TO HOOK TO BE 48" AFF MAX.
10. ADJUST DOOR PUSHING, PULLING, OR SLIDING OPENING FORCE TO BE 5 LB MAX. PER CBC 11B-404.2.9
11. RELOCATE (E) FIRE EXTINGUISHER OUT OF DOOR PULL SIDE CLEARANCE (IF APPLIC.) AND MOUNT SO THAT BOT. OF EXTINGUISHER IS 27" OR LESS AFF PER CBC 11B-307.2
12. RELOCATE (E) TOWEL BAR AND MOUNT SO THAT IT'S 48" MAX. AFF PER CBC 11B-308.2.1
13. REMOVE (E) DOOR THRESHOLD AND PROVIDE ONE COMPLIANT WITH CBC 11B-404.2.5
14. ~~ADJUST (E) EYEWASH~~ STATION HEIGHT SO THAT WASH OUTLETS ARE AT 34" AFF.
15. ~~FINISH ENDS OF~~ TRANSACTION COUNTER & RETURN TO (E) CASEWORK.

LEGEND

- RESTROOM ACCESSORY - SEE SCHEDULE ON A700
- SIGNAGE - SEE SHT. ~~A960 FOR TYPE~~
- EXISTING DOOR TO REMAIN - SEE A200 FOR DOOR # AND PROVIDE NEW HARDWARE PER SCHEDULE ON A710
- (N) DOOR - SEE A200 FOR DOOR # AND SEE SCHEDULE ON A710
- (N) WALL
- 60" DIAMETER ACCESSIBLE CLEAR TURNING RADIUS TO BE MAINTAINED AT ALL TIMES
- 30" x 48" ACCESSIBLE CLEAR SPACE TO BE MAINTAINED AT ALL TIMES
- (N) CASEWORK AND SINK, IF INDICATED

Copyright © 2026

All ideas, designs, arrangements and plans indicated or represented by this drawing are owned by, and the property of, NICHOLS, MELBURG and ROSSETTO and were created, evolved and developed for use on, and in conjunction with, the specified project. None of such ideas, designs, arrangements and plans shall be used by or disclosed to any person, firm or corporation for any purpose whatsoever without the written permission of NICHOLS, MELBURG and ROSSETTO.

NICHOLS MELBURG & ROSSETTO
ARCHITECTS + ENGINEERS
300 KNOLLCREST DRIVE
REDDING, CA. 96002
(530) 222-3300 (530) 222-3538 FAX
http://www.nmrdesign.com

CONSULTANTS

LICENSE STAMPS

LICENSED ARCHITECT
DEVEN PARTRIDGE CARTER
C 34730
REN. 5/31/27
STATE OF CALIFORNIA

PROJECT NAME

RENOVATION FOR

Humboldt County Animal Shelter

980 Lycoming Ave
McKinleyville, CA 95519

SHEET TITLE

ENLARGED PARTIAL PLAN - NEW WORK

DRAWING STATUS

CONSTRUCTION DOCUMENTS

BLDG. DEPT. SUBMITTAL

REVISIONS

Sym.	Description	Date
3	CASP	2026-04-03

Drawn By	KAJ
Date Issued	04-03-2026
Scale	1/4" = 1'-0"
Project No.	17-6430

SHEET No.

A221

Login Name: TimS
Plot Date: April 02, 2026 - 11:56 am
File Name: N:\Projects\6000\Clients\2017\17-6430 Humboldt County ADA Compliance\5 Animal Shelter\10 DWGs\17-6430-5-A220-221_A2-N-ENLGRL\Adwg
Plotter: ARCH_D.pc3 Paper: 24 x 36 in. Scale: 1:1
Layout: A221

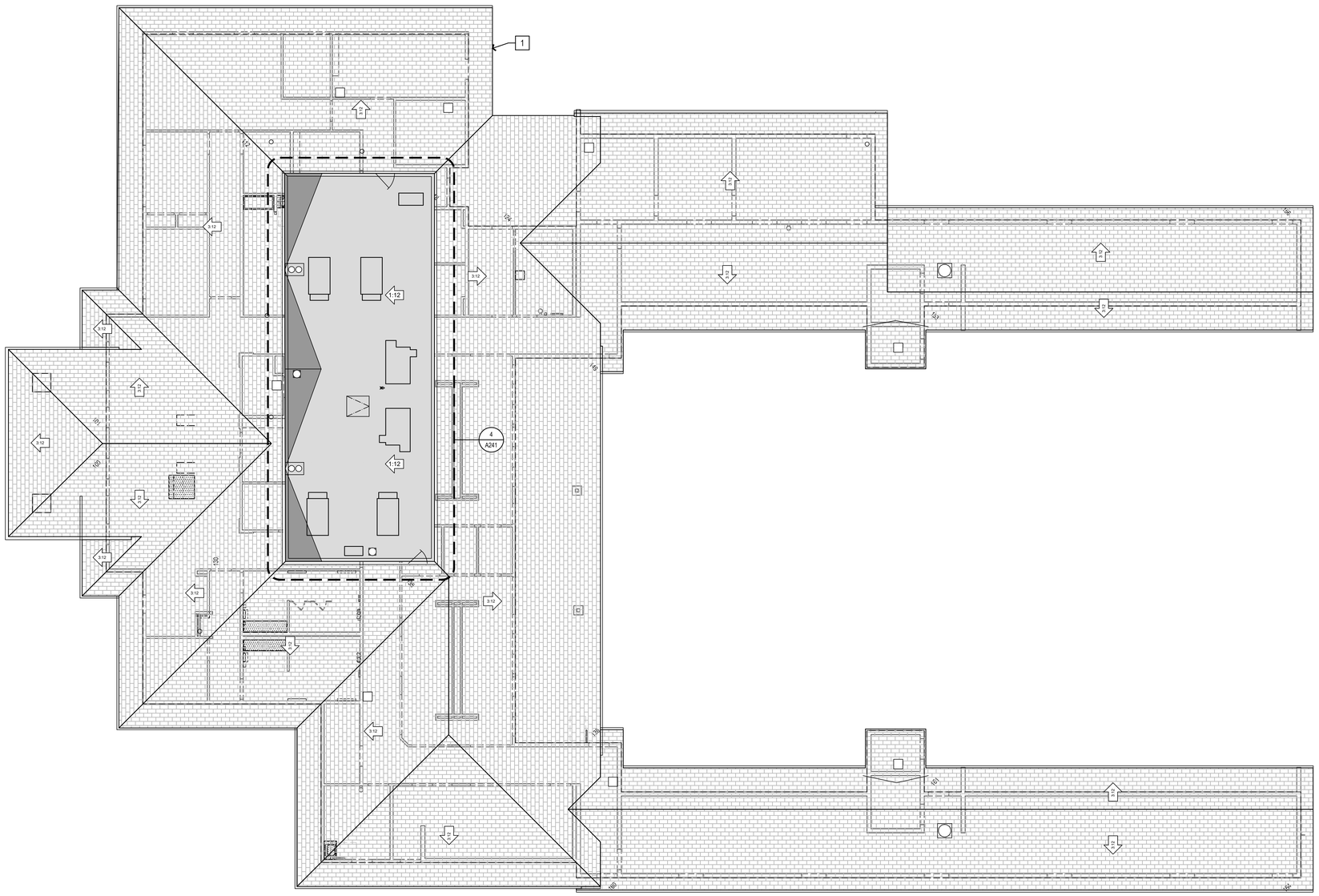

ROOF PLAN

SCALE: 1/8" = 1'-0"

GENERAL NOTES

1. SEE ENLARGED PLAN A241 FOR DESCRIPTION OF WORK WITHIN ROOF WELL.

KEYNOTES - NEW

1. REPLACE DAMAGED BARGE/RAKE BOARD, PAINT TO MATCH, SLIP UNDER FLASHING, PROVIDE CONTINUOUS BEAD OF SEALANT.
2.
3.
4.

Copyright © 2025

All ideas, designs, arrangements and plans indicated or represented by this drawing are owned by, and the property of, NICHOLS, MELBURG and ROSSETTO and were created, evolved and developed for use on, and in conjunction with, the specified project. None of such ideas, designs, arrangements and plans shall be used by or disclosed to any person, firm or corporation for any purpose whatsoever without the written permission of NICHOLS, MELBURG and ROSSETTO.

NICHOLS MELBURG & ROSSETTO
ARCHITECTS + ENGINEERS
300 KNOLLCREST DRIVE
REDDING, CA. 96002
(530) 222-3300 (530) 222-3538 FAX
http://www.nmrdesign.com

CONSULTANTS

LICENSE STAMPS

LICENSED ARCHITECT
DEVEN CARTER
C 34730
REN. 5/31/27
STATE OF CALIFORNIA

PROJECT NAME

RENOVATION FOR

Humboldt County Animal Shelter

980 Lycoming Ave
McKinleyville, CA 95519

SHEET TITLE

ROOF PLAN

DRAWING STATUS

CONSTRUCTION DOCUMENTS

BLDG. DEPT. SUBMITTAL

REVISIONS

Sym.	Description	Date

Drawn By	KAJ
Date Issued	04-03-2026
Scale	1/8" = 1'-0"
Project No.	17-6430

SHEET No.

A240

Login Name: kurt_j
Plot Date: December 05, 2025 - 11:15 am
File Name: N:\Projects\6000\Jobs\2017\17-6430 Humboldt County ADA Compliance\15 Animal Shelter\10 DWGs\17-6430 S-A240_A3-ROOFPLN.dwg
Plot Scale: 1:1 (1 inch = 1 inch)

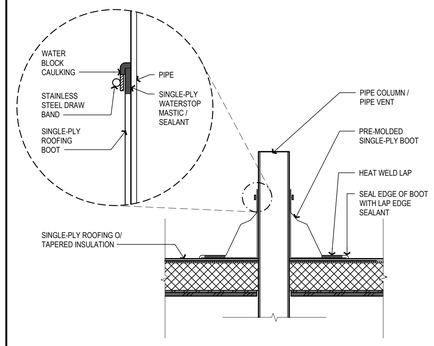

A241

PIPE COLUMN - PIPE VENT FLASHING

SCALE: 1 1/2"=1'-0" (13)

ZURN Z165 ROOF DRAIN WITH PRIMARY DRAIN AND OVERFLOW, OR EQUAL

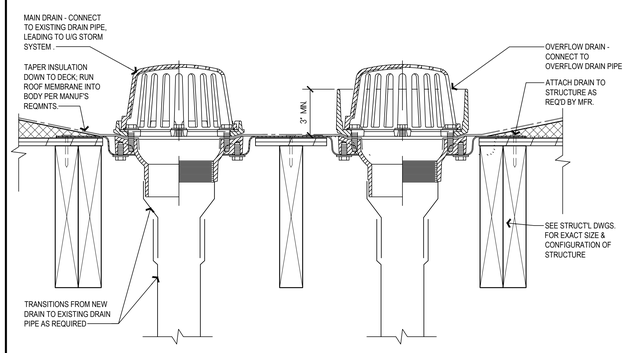

A241

ROOF DRAIN

SCALE: 3"=1'-0" (5)

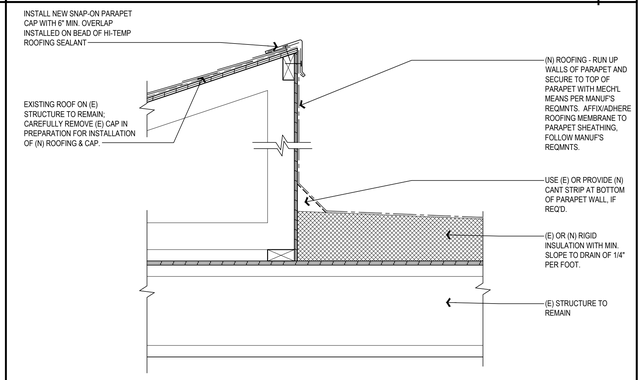

A241

(N) CAP & ROOFING ON PARAPET WALL

SCALE: 1-1/2"=1'-0" (6)

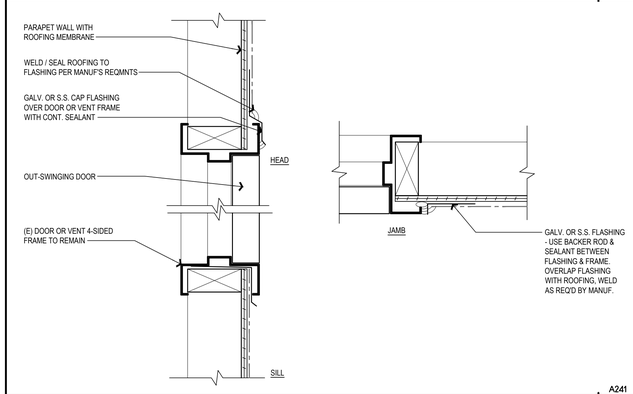

A241

DOOR FRAME OR VENT PENETRATION OF PARAPET WALL

SCALE: 3"=1'-0" (7)

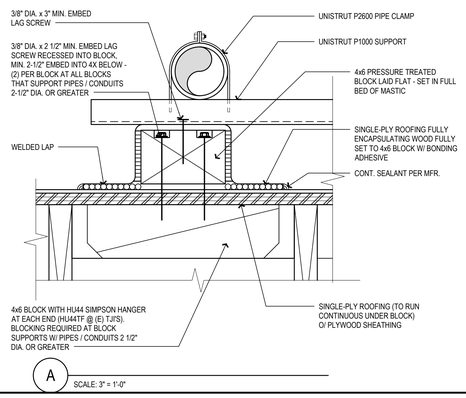

A SCALE: 3" = 1'-0"

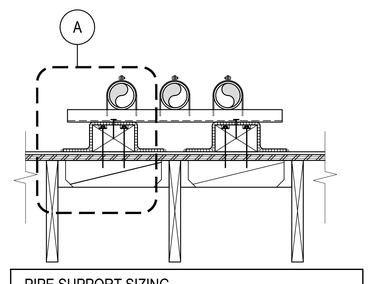

PIPE SUPPORT SIZING

	SIZE OF PIPE (INCHES)	SUPPORT SPACING (FEET)	NOTE:
HORIZONTAL VERTICAL	1/2" 3/4" OR 1" 1-1/4" OR LARGER 1-1/4" OR LARGER	6' 8' 10' EVERY FLOOR LEVEL	SEE ALSO C.P.C TABLE 3-2 REGARDING SUPPORTS FOR JOINTS AND MATERIALS

A241

PIPE SUPPORT

SCALE: 1 1/2"=1'-0" (8)

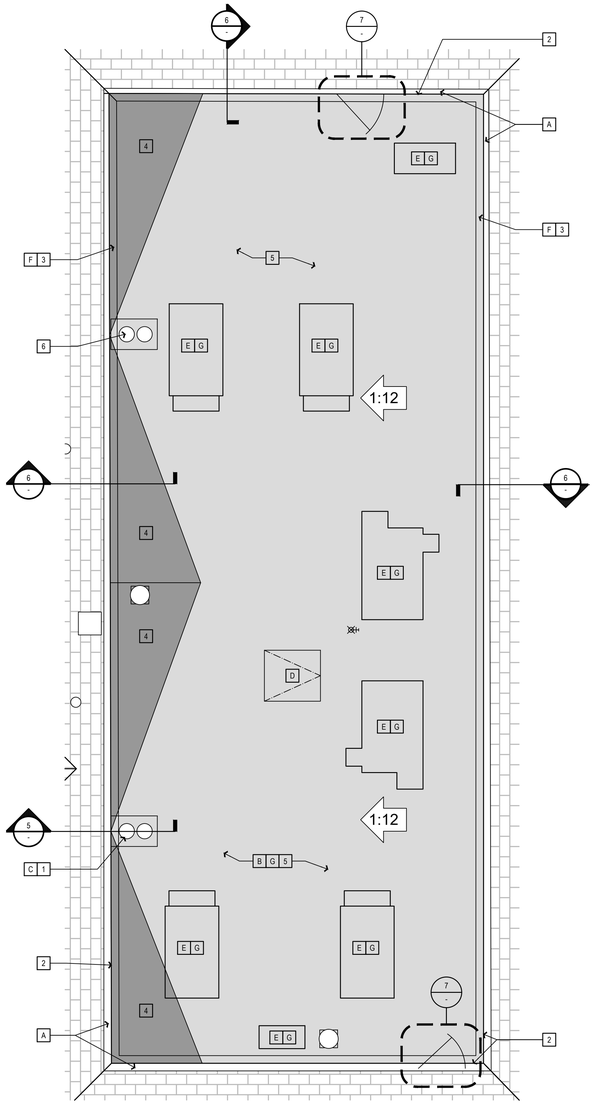

DEMOLITION / PREPARATION KEYNOTES

- A — REMOVE CAP FLASHING AT PARAPET, FIBERBOARD TRIM, FIBERBOARD PANELING, AND ROOFING CAP FLASHING DOWN TO RIGID INSULATION OR SHEAR PANEL ATOP TJIs; CONFIRM EXISTENCE OF 3/8" SHEAR PANELING PER STRUCTURAL AS-BUILTS.
- B — REMOVE (E) ROOF MEMBRANE.
- C — VERIFY CONDITION OF ROOF DRAIN & OVERFLOW, AND FRAMING SUPPORT; REPLACE IF WATER-DAMAGED OR OTHERWISE COMPROMISED - SEE DET. 5/-
- D — REMOVE (E) ROOF HATCH FRAME AND DOOR AS REQ'D FOR INSTALLATION OF NEW ROOFING MEMBRANE, AND REINSTALL PER MANUF'S REQMNTS.
- E — AT MECHANICAL UNITS REMOVE SHEET METAL STRAPS ATTACHING MECH'L UNITS TO CURB AND CAREFULLY BEND OUT CURB FLASHING FOR SLIPPING NEW ROOFING UNDER FLASHING. USE SELF-SEALING WASHERS AND GASKETS AT NEW ATTACHMENTS. SEAL ALL PENETRATIONS. REPLACE DAMAGED FLASHING, CURBS, OR CANT STRIPS AT MECH'L UNIT CURBS.
- F — REMOVE CANT STRIP TO INSTALL NEW 3/8" SHEATHING PER KEYNOTE 2, IF REQ'D.
- G — TEMPORARILY REMOVE AND REINSTALL CONDENSATE AND MECH'L UNIT GAS SUPPLY LINES FOR DEMO & INSTALLATION OF NEW ROOFING.

NEW WORK KEYNOTES

1. INSTALL NEW ROOF DRAIN IF REQUIRED - SEE DET 5/-
2. IF NO 3/8" APA SHEATHING W/8d @ 6" O.C. EN. & 12" O.C. FN. EXISTS UNDER FIBERBOARD @ PARAPET WALLS, INSTALL SUCH AS REQ'D BY STRUCT'L AS-BUILTS.
3. PROVIDE NEW CANT STRIP AT ROOF WELL PERIMETER, IF REQ'D - SEE DET 6/-
4. (E) CRICKET TO REMAIN; ASSURE POSITIVE DRAINAGE TO (E) OR (N) DRAINS.
5. INSTALL NEW ROOFING MEMBRANE AND ATTACH/ADHERE TO PARAPET SUBSTRATE AS REQ'D BY MANUF. AT ALL PENETRATIONS, FLASHING, CURBS, & JOINTS, UTILIZE PRODUCTS AND ACCESSORIES PROVIDED OR RECOMMENDED BY MANUF. TO MAINTAIN WARRANTY REQMNTS.

GENERAL NOTES

1. ALL ROOFING TO BE SLOPED AT 1/4" PER FOOT MIN. USING (E) OR (N) TAPERED INSULATION.
2. ALL ROOF ASSEMBLIES AND ROOF COVERINGS MUST BE A MINIMUM OF CLASS C (PER TABLE 1505.1).
3. PLUMBING VENT - SEE PLUMBING PLANS FOR LOCATIONS.
4. SEE DETAIL 8 FOR SUPPORT OF EXPOSED PIPING DISTRIBUTED ABOVE ROOF
6. SEE DETAIL 13 FOR FLASHING & VENTS & OTHER ROOF PENETRATIONS.

ENLARGED ROOF PLAN - EQUIPMENT WELL

SCALE: 1/4"=1'-0" (4)

Copyright © 2025

All ideas, designs, arrangements and plans indicated or represented by this drawing are owned by, and the property of, NICHOLS, MELBURG and ROSSETTO and were created, evolved and developed for use on, and in conjunction with, the specified project. None of such ideas, designs, arrangements and plans shall be used, or disclosed to any person, firm or corporation for any purpose whatsoever without the written permission of NICHOLS, MELBURG and ROSSETTO.

NICHOLS MELBURG & ROSSETTO
ARCHITECTS + ENGINEERS
300 KNOLLCREST DRIVE
REDDING, CA. 96002
(530) 222-3300 (530) 222-3538 FAX
http://www.nmrdesign.com

CONSULTANTS

LICENSE STAMPS

LICENSED ARCHITECT — DEVEN PARKER — C 34730 — REN. 5/31/26 — STATE OF CALIFORNIA

PROJECT NAME

RENOVATION FOR

Humboldt County Animal Shelter

980 Lycoming Ave
McKinleyville, CA 95519

SHEET TITLE

ENLARGED ROOF WELL & ROOF DETAILS

DRAWING STATUS

CONSTRUCTION DOCUMENTS

BLDG. DEPT. SUBMITTAL

REVISIONS

Sym.	Description	Date

Drawn By	KAJ
Date Issued	04-03-2026
Scale	1/4" = 1'-0"
Project No.	17-6430

SHEET No.

A241

Login Name: Kurt_J
Plot Date: December 05, 2025 - 10:58 pm
File Name: N:\Projects\6000\Cals\2017\7-6400 Humboldt County ADA Compliance\5 Animal Shelter\10 DWGs\17-6430\5-A241_AS-ENLGRDCP.dwg
Xrefs: xr-ALS_FloorPlan; xr-A-Ref

FINISH SCHEDULE LEGEND

CSV-1 COVED SHEET VINYL (6")
SV-1 TO BE COVED WITH METAL "C" CAP

FRP-1 FIBERGLASS REINFORCED PANEL

MANUFACTURER	CRANE COMPOSITES
STYLE	GLASBORD
COLOR	WHITE
WIDTH	4'-0"

FT-1 FLOOR TILE

MANUFACTURER	CROSSVILLE INC.
STYLE	JAVA JOINT
COLOR	FRESH GROUND
SIZE	2" X 2" MOSAIC
FINISH	UPS - SLIP RESISTANT
GROUT JOINT	CUSTOM BUILDING PRODUCTS
GROUT COLOR	#540 TRUFFLE

PRT-1 TOILET PARTITION

MANUFACTURER	SCRANTON PRODUCTS
COLLECTION	MATCH (E)
STYLE	POWDER-COATED STEEL
COLOR	MATCH (E)

PT-1 PAINT

MANUFACTURER	DUNN EDWARDS
COLOR	TBD
FINISH	SEMI GLOSS
LOCATION	WALLS, CEILING, AND DOOR FRAMES

PT-2 PAINT

MANUFACTURER	BEHR PREMIUM (HOME DEPOT)
STYLE	CLEAR WOOD STAIN TRANSPARENT WATERPROOFING WOOD FINISH
BASE MATERIAL	ACRYLIC
COLOR	"CLEAR" NO. 500-N

RB-1 RUBBER BASE

MANUFACTURER	JOHNSONITE
STYLE	COVED TOE, GLUED
COLOR	TBD
HEIGHT	6"

SV-1 SHEET VINYL

MANUFACTURER	MANNINGTON OR EQUAL
STYLE	GLUE DOWN
THICKNESS	2 MM
WEAR LAYER	12 MIL
COLOR	TBD

TT-1 TILE TRIM

MANUFACTURER	SCHULTER
STYLE	JOLLY A100AT
COLOR	SATIN NICKEL
LOCATION	OUTSIDE CORNERS

TT-2 TILE TRIM

MANUFACTURER	SCHULTER
STYLE	AHK1S100AT
COLOR	SATIN NICKEL
LOCATION	FLOOR/WALL INTERSECTION

ALL TT TO INCLUDE JOINT AND END FITTINGS AS REQUIRED

VCT VINYL COMPOSITION TILE

MANUF	ARMSTRONG
COLOR	MATCH (E)

FINISHES GENERAL NOTES

A. ALL INTERIOR WALL & CLG. FINISHES SHALL COMPLY WITH CBC TABLE 803.9 AND SECTION 803 (FLAME SPREAD RATINGS). PROVIDE A CLASS B, (26-75 FLAME SPREAD RATING) AT ROOMS OR AREAS AND A CLASS A (0-25 FLAME SPREAD RATING) AT ALL EXITWAYS. FINISHES SHALL ALSO COMPLY WITH CBC SECTION 1224.4.11 AND TABLE 1224.1.

B. SEE INTERIOR ELEVATIONS FOR ADDITIONAL INFORMATION.

C. ALL ROOM FINISHES DESIGNATED AS EXISTING THAT ARE AFFECTED BY CONSTRUCTION SHALL BE PATCHED TO MATCH ADJACENT FINISHES SO THAT THERE WILL BE NO DISCERNABLE DIFFERENCES BETWEEN NEW AND EXISTING SURFACES.

D. INTERIOR FINISH SAMPLES MUST BE SUBMITTED FOR APPROVAL PRIOR TO INSTALLATION.

E. ALL INTERIOR FINISHES SHALL COMPLY WITH C.B.C. SECTION 804.

F. WOOD GRAIN PLASTIC LAMINATES SHALL BE ORIENTED WITH THE GRAIN VERTICALLY (INCLUDING DRAWERS, FILLER PANELS AND SLOPED TOPS) SUCH THAT THE 'GRAIN' MATCHES AND ALIGNS VERTICALLY FROM DRAWER TO DRAWER, FROM DOOR TO DRAWER, AND DOOR TO SLOPED/FILLER TOPS AS OCCURS.

J. ALL MECHANICAL GRILLS SHALL BE PAINTED TO MATCH ADJACENT WALL COLOR.

ROOM FINISH SCHEDULE

NO.	ROOM NAME	FLOOR MATERIAL	FLOOR BASE	WALLS NORTH	WALLS EAST	WALLS SOUTH	WALLS WEST	CEILING FINISH	DOOR FRAME	DOOR	ROOM FINISH REMARKS
121	CAT RECEIVING										
128	BREAK RM	SV-1	CSV-1	P-1	P-1	P-1	P-1	(E)	P-1	P-1	
129	PET SUPPLIES	VCT-1	RB-1	(E)	(E)	P-1	P-1	(E)	(E)	(E)	
130	RESTROOM HALL	VCT-1	RB-1	P-1	P-1	(E)	(E)	(E)	P-1	P-1	1,
138	ANIMAL KITCHEN	SV-1	CSV-1	P-1	(E)	(E)	P-1	(E)	(E)	(E)	
146	MEN'S RESTROOM	SV-1	CSV-1	(E) FRT / P-1	(E) FRT / P-1	(E) FRT / P-1	(E) FRT / P-1	P-1	P-1	P-1	2
147	WOMEN'S RESTROOM	SV-1	CSV-1	(E) FRT / P-1	(E) FRT / P-1	(E) FRT / P-1	(E) FRT / P-1	P-1	P-1	P-1	2

ROOM FINISH REMARKS

1. REMOVE (E) VCT TILE; PREP FOR INSTALLATION OF NEW TILE.
2. REMOVE (E) SHEET VINYL; PREP FOR (N) LEVELING COMPOUND TO ACHIEVE 2% MAX. SLOPE TO DRAIN.

MISC. ACCESSIBILITY NOTES

FLOOR FINISHES

1. FLOOR AND GROUND SURFACES SHALL BE STABLE, FIRM, AND SLIP RESISTANT AND SHALL COMPLY WITH SECTION 11B-302.
2. EXPOSED EDGES MUST HAVE TRIM ON THE ENTIRE LENGTH OF THE EXPOSED EDGE AND BE FASTENED TO THE FLOOR TO PREVENT CURLING. TRIM MUST MEET SPECIFICATIONS FOR CHANGES IN LEVEL, INCLUDING REQUIREMENTS FOR BEVELED EDGES WHEN THE HEIGHT EXCEEDS 1/4". THE MAXIMUM HEIGHT IS 1/2".
3. OPENINGS IN GROUND AND FLOOR SURFACES, SUCH AS GRATES, ARE LIMITED IN WIDTH TO PREVENT PASSAGE OF A 1/2" DIAMETER SPHERE. WHEELCHAIR CASTERS CAN GET WEDGED INTO WIDER OPENINGS.
4. CHANGES IN LEVEL CAN BE UP TO 1/4" WITHOUT TREATMENT OR 1/2" IF BEVELED WITH A SLOPE NO STEEPER THAN 1:2. CHANGES IN LEVEL ABOVE A 1/2" MUST BE TREATED AS A RAMP OR CURB RAMP (OR A WALKWAY IF A SLOPE NO STEEPER THAN 1:20 CAN BE ACHIEVED). THESE SPECIFICATIONS APPLY TO ALL PORTIONS OF ACCESSIBLE ROUTES, INCLUDING THRESHOLDS AND CARPET TRIM.

CEILINGS / HEAD CLEARANCE

1. PROVIDE HEADROOM CLEARANCE OF AT LEAST 80" ALONG ALL CIRCULATION PATH (EXCEPT AT DOORS AND DOORWAYS WHERE A 78" MIN. CLEARANCE IS PERMITTED TO ACCOMMODATE DOOR STOPS AND CLOSERS).
2. WALL-MOUNTED OBJECTS WITH LEADING EDGES MORE THAN 27" AND NOT MORE THAN 80" ABOVE THE FINISH FLOOR OR GROUND SHOULD PROTRUDE 4" MAXIMUM HORIZONTALLY INTO THE CIRCULATION PATH.

RESTROOM ACCESSORIES SCHEDULE

TAG	FIXTURE DESCRIPTION	MFR.	MODEL #	RESPONSIBILITY TO PROVIDE: OWNER	RESPONSIBILITY TO PROVIDE: CONTRACTOR	RESPONSIBILITY TO INSTALL: OWNER	RESPONSIBILITY TO INSTALL: CONTRACTOR	REMARKS	NOTES
A	PAPER TOWEL DISPENSER	(E)	(E)	●	○	●	○	A	COMPLY WITH CBC 11B-603.5 DISPENSER CONTROL POINT OR OPERATING MECHANISM MAX. 40" AFF
B	SOAP DISPENSER	(E)	(E)	●	○	●	○	A	COMPLY WITH CBC 11B-604.7.1 - SEE 5/G201. RELOCATE (E) SOAP DISPENSER TO 48" AFF @ OPERABLE PART PER 11B-308.3.1.
C	TOILET PAPER DISPENSER	TORK	5555290	●	○	●	○	A	COMPLY WITH CBC 11B-604.7.1 - SEE 6/G201.
D	CLOTHING HOOK	(E)	(E)	●	○	●	○	F	(E) HOOK TOO HIGH, REMOUNT @ 48" AFF MAX. COMPLY WITH CBC 11B-308.2.1
D1	COOKWARE HOOK	ANY	ANY	●	○	●	○	F	MOUNT @ 48" AFF MAX., COMPLY WITH CBC 11B-308.2.1
E	TOILET SEAT COVER DISPENSER	TORK	344088	●	○	●	○	E	COMPLY WITH CBC 11B-603.5 - SEE 6/G201.
F	MIRROR - 24"W X 36"H	BOBRICK	#B-290-2436	○	○	○	○		NO CHANGE
G	PIPING PROTECTION PACKAGE	TRUBRO	LAVGUARD 2 OR EQUAL	●	○	○	●	E	
H	BABY CHANGING STATION	(E)	(E)	○	●	○	●	C	RELOCATE (E) CHANGING STATION; COMPLY WITH REQMNTS. SHOWN IN 5/G201.
J	SIDE GRAB BAR	(E)	(E)	○	○	○	○		NO CHANGE
K	REAR GRAB BAR	(E)	(E)	●	○	○	●	C	RELOCATE (E) GRAB BAR; COMPLY WITH REQMNTS. SHOWN IN 1/G200.
L	TOILET PARTITIONS	SCRANTON PRODUCTS	HINY HIDERS FLUSH STYLE	○	●	○	●	H	RELOCATE & ADJUST AS SHOWN IN PLAN.
M	HAND SANITIZER DISPENSER	(E)	(E)	●	○	●	○	D	RELOCATE (E) HAND SANITIZER TO 48" AFF @ OPERABLE PART PER 11B-308.3.1.
M1	HAND SANITIZER DISPENSER	(E)	(E)	●	○	●	○	D	RELOCATE (E) HAND SANITIZER TO 48" AFF @ OPERABLE PART PER 11B-308.3.1 OVER COUNTERTOP
N	TOILET PARTITION DOOR PULL	ANY	ANY	○	●	○	●	B	COMPLY WITH CBC 11B-604.8.1.2
P	DETECTABLE WARNING RAIL	ANY	ANY	○	●	○	●	H	SEE DET. 10/G200. COMPLY WITH CBC 11B-307.2

REMARKS

A. MOUNT ON BLOCKING SHOWN IN 12/A900 OR ON WALL STUDS PER MANUFACTURER'S REQUIREMENTS.
B. MOUNT ON INSIDE OF TOILET PARTITION DOOR PER MANUFACTURER'S REQUIREMENTS.
C. MOUNT ON BLOCKING SHOWN IN 11/A900 PER MANUFACTURER'S REQUIREMENT.
D. MOUNT WITH DRYWALL SCREW ANCHORS ONLY; ITEM WEIGHS LESS THAN 20 LBS.
E. SUBSTITUTIONS ALLOWED IF IT CAN BE REASONABLY DEMONSTRATED THAT PRODUCT IS SUBSTANTIALLY SIMILAR TO THE ONE SPECIFIED AND MEETS BUILDING CODE REQUIREMENTS.
F. MAXIMUM PROJECTION 4" FROM THE FINISHED FACE OF WALL.
G. NOT USED.
H. BRACE TO WALL AND/OR FLOOR PER MANUF'S REQUIREMENTS.

TYPICAL NOTES

1. SEE G201 FOR TOILET ACCESSORY ACCESSIBLE MOUNTING HEIGHTS & LOCATIONS.
2. ALL WALL-MOUNTED ACCESSORIES ARE LESS THAN 30 LBS. (FULLY LOADED WITH DISPENSABLE PRODUCTS, IF ANY) WITH THE EXCEPTION OF THE BABY CHANGING STATION & GRAB BARS.

Copyright © 2025
All ideas, designs, arrangements and plans indicated or represented by this drawing are owned by, and the property of, NICHOLS, MELBURG and ROSSETTO and were created, evolved and developed for use on, and in conjunction with, the specified project. None of such ideas, designs, arrangements and plans shall be used by or disclosed to any person, firm or corporation for any purpose whatsoever without the written permission of NICHOLS, MELBURG and ROSSETTO.

NICHOLS MELBURG & ROSSETTO
ARCHITECTS + ENGINEERS
300 KNOLLCREST DRIVE
REDDING, CA. 96002
(530) 222-3300 (530) 222-3538 FAX
http://www.nmrdesign.com

CONSULTANTS

LICENSE STAMPS

LICENSED ARCHITECT
DEVEN CARTER
C 34730
REN. 5/31/27
STATE OF CALIFORNIA

PROJECT NAME

RENOVATION FOR

Humboldt County Animal Shelter

980 Lycoming Ave
McKinleyville, CA 95519

SHEET TITLE

SCHEDULES

DRAWING STATUS

CONSTRUCTION DOCUMENTS

BLDG. DEPT. SUBMITTAL

REVISIONS

Sym.	Description	Date

Drawn By	KAJ
Date Issued	04-03-2026
Scale	NTS
Project No.	17-6430

SHEET No.

A700

Login Name: Kurt_J
Plot Date: December 05, 2025 - 1:06 pm
File Name: N:\Projects\6000Series\2017\17-6430 Humboldt County ADA Compliance\5 Animal Shelter\10 DWGs\17-6430-5-A700_AS-SCHEDS.dwg
PAGESETUP=A-ARCH

GENERAL DOOR NOTES

1. COORDINATE ALL WORK BETWEEN HARDWARE SUPPLIER, SECURITY CONTRACTOR, LOW VOLTAGE CONTRACTOR AND ELECTRICAL CONTRACTOR AS REQUIRED FOR DOORS NEEDING ELECTRICAL OR LOW VOLTAGE FEATURES.
2. ALL EXITS SHALL BE OPENABLE FROM THE INSIDE WITHOUT THE USE OF ANY SPECIAL KNOWLEDGE OR EFFORT AND WITHOUT REQUIRING THE ABILITY TO GRASP HARDWARE (E.G. PANIC HARDWARE).
3. ALL GLAZING IN DOORS, FRAMES & STOREFRONTS SHALL BE TEMPERED; CLASS 1 AT INTERIOR DOORS & SIDELIGHTS; CLASS 2 AT EXTERIOR DOORS & ALUMINUM STOREFRONTS.
4. CONTRACTOR SHALL VERIFY ALL ROUGH OPENINGS AND COORDINATE JAMB DEPTHS WITH SCHEDULED FINISHES AND WALL THICKNESS PRIOR TO FABRICATION AND DELIVERY OF DOORS AND FRAMES.
5. ALL RATED DOORS ARE TO BE POSITIVE LATCHING WITHIN RATED FRAMES.
6. ALL DOORS SHALL COMPLY WITH CBC SECT. 1010 AND UL 1784.
7. FIRE-RATED DOOR FRAMES SHALL BE INSTALLED STRICTLY PER MANUFACTURER'S PRINTED INSTRUCTIONS. MANUFACTURER'S PRINTED INSTRUCTIONS SHALL BE MADE AVAILABLE TO THE INSPECTING AUTHORITIES AT THE JOB SITE AT ALL TIMES.
8. ALL RATED ASSEMBLIES SHALL BE PROVIDED WITH APPROVED GASKETING MATERIAL INSTALLED TO PROVIDE A SMOKE SEAL WHERE THE DOOR CONTACTS THE STOP ON BOTH SIDES AND ACROSS THE TOP (PER UL 1784).
9. WHERE TWO FIRE RATINGS ARE INDICATED (EXAMPLE:"20/45-MIN."), THE FIRST NUMBER INDICATES THE DOOR RATING (IN MINUTES); AND THE SECOND NUMBER INDICATES THE RATING (IN MINUTES) FOR THE FRAME, AS WELL AS FOR ALL GLAZED OPENINGS WHICH ARE PART OF THE FRAME.
10. FRAME LATCH KNOCK-OUT & DOOR HARDWARE LOCATIONS TO BE COORDINATED WITH CROSS RAIL ON DOORS, WITHIN HANDICAPPED ACCESSIBILITY PARAMETERS.
11. CONTRACTOR SHALL MAKE ALL DOOR ADJUSTMENTS NECESSARY TO ACCOMMODATE SCHEDULED FLOORING MATERIAL AND PROVIDE LEVEL TRANSITION BETWEEN FLOORING.
12. DOOR OPENING LOCATIONS:
    A. ADJACENT (3" TO FLANKING WALL)
    B. AT CENTERLINE OF THE ROOM
    C. AS DIMENSIONED ON PLAN
13. ALL DOOR FRAMES, TRANSOM LITE MULLIONS AND SIDE LITE MULLIONS TO BE 2" WIDE UNLESS OTHERWISE NOTED.
14. ALL DOORS TO BE 1-3/4" THICK.
15. ALL EXTERIOR DOORS TO BE INSULATED.
16. SEE SHEET A960 FOR MOUNTING HEIGHTS OF SIGNAGE.
17. FINISH FLOOR TRANSITIONS OCCUR AT CENTERLINE OF DOORS, U.O.N.
18. EFFORT TO OPEN DOORS NOT TO EXCEED 5 POUNDS FOR EXTERIOR DOORS AND 5 POUNDS FOR INTERIOR DOORS (15 POUNDS MAXIMUM IF RATED FIRE DOOR) PER CBC.
19. ALL EXTERIOR DOORS TO BE INSULATED.
20. PROVIDE DOOR BUMPER / WALL STOPS FOR ALL DOORS SWINGING 90 DEG. OR MORE AGAINST WALLS WHERE DOOR STOPS ARE NOT OTHERWISE INCLUDED IN HARDWARE GROUP; SEE 6/A940 FOR DETAIL.
21. DOORS WITH CLOSERS MUST HAVE THE SWEEP PERIOD ADJUSTED SO THAT FROM THE 90 DEGREE OPEN POSITION IT TAKES AT LEAST 5 SECONDS TO MOVE TO A POSITION OF 12 DEGREES FROM THE LATCH PER CBC 11B-404.2.8.1.
22. LOCATE ALL DOOR HARDWARE BETWEEN 34" AND 44" A.F.F. PER CBC 11B-404.2.7.
23. BOTTOM PORTION OF ALL DOORS (10" MIN. HEIGHT) TO HAVE A SMOOTH SURFACE PER CBC 11B-404.2.10.
24. OPENING HARDWARE TO BE OPERABLE WITH ONE HAND AND SHALL NOT REQUIRE TIGHT GRASPING, PINCHING OR TWISTING OF THE HAND PER CBC 11B-404.2.7 AND 309.4.
25. PRIOR TO PAINTING EXISTING DOORS, FILL DIVOTS AND SCRATCHES WITH PUTTY, SAND DOORS SMOOTH WITH 300 GRIT OR FINER SAND PAPER, PAINT WITH SEMI-GLOSS PAINT.
26. SEE FINISH SCHED A700 FOR PAINT COLORS.
27. CONTRACTOR IS RESPONSIBLE FOR RE-KEYING ALL DOORS AT TURNOVER.
28. CONTRACTOR TO COORDINATE ALL WORK BETWEEN HARDWARE SUPPLIER, SECURITY CONTRACTOR AND ELECTRICAL CONTRACTOR.
29. ALL EXIT AND EXIT ACCESS DOORS TO COMPLY WITH CBC SECTION 1007.
30. ALL EXTERIOR HM DOORS TO HAVE PAN FLASHING.

ABBREVIATIONS

DOOR MATERIAL

AL	ALUMINUM
MDF	MEDIUM DENSITY FIBERBOARD (HOLLOW)
HM	HOLLOW METAL (STEEL)
HM I	HOLLOW METAL (STEEL, RIGID FOAM INSULATED)
SC	SOLID CORE WOOD

DOOR FINISH

FF	FACTORY FINISH
MP	METAL, PAINT
PL	PLASTIC LAMINATE - FORMICA "SELECT CHERRY" 7759-58

DOOR OR FRAME GLAZING
(TEMPERED, NON-FIRE RATED, UON)

SGL	SINGLE GLAZED
DUAL	DUAL GLAZED

DOOR OPERATION
(MANUAL, UON)

PO	POWER-OPERATED
PH	PANIC HARDWARE
CH	CHAIN-OPERATED (MANUAL)

FRAME TYPE
(SEE STOREFRONT TYPES ON A720, ALL OTHERS THIS SHEET)

FRAME MATERIAL

AL	ALUMINUM
HM	HOLLOW METAL (STEEL)
HM I	HOLLOW METAL (INSULATED STEEL)

FRAME FINISH

MP	METAL, PAINTED

POWER & SIGNAL

S	SIGNAL - SEE ELEC'L LOW VOLTAGE DWGS. FOR MORE INFO.
L	12V OR 24V LOW VOLTAGE POWER - SEE ELEC'L DWGS.
H	120V HIGH VOLTAGE POWER - SEE ELEC'L DWGS.

FIRE RATING

20	20 MINUTE
45	45 MINUTE (C-LABEL)

SECURITY
(NONE, UON)

CR	PROX CARD READER

OTHER ABBREVIATIONS & SYMBOLS

AL	ALUMINUM OR ALUMINUM STOREFRONT
FF	FACTORY FINISH
GL	GLASS
GI	GALVANIZED
HM	HOLLOW METAL - WELDED
HPL	HIGH PRESSURE LAMINATE - COLOR AS INDICATED
INS	INSULATED
KD	HOLLOW METAL - KNOCK DOWN TIMELY 'CLASSIC' C-SERIES, OR EQUAL
NET	NET, USABLE OPENING
N/A	NOT APPLICABLE
OPNG.	CLEAR OPENING
PR	PAIR
PT	PAINT
R.O.	ROUGH OPENING
SS	STAINLESS STEEL
STL	STEEL
T	TEMPERED GLASS PANE
VIF	VERIFY IN FIELD
VNL	VINYL
(A)	DOOR TYPE
(1)	FRAME TYPE
◇1	ALUMINUM DOOR / WINDOW FRAME TYPE - SEE SHT A720

DOOR REMARKS

SEE "DOOR REMARKS" COLUMN AT DOOR SCHEDULE FOR SPECIFIC DOORS TO WHICH THE FOLLOWING NOTES APPLY.

1. DOOR WITH SELF-CLOSING DEVICE - SEE HARDWARE SCHEDULE FOR MORE INFO.
2. DOOR IS FACTORY-FINISHED, DOES NOT REQUIRE PAINTING.
3. DOOR WITH ADA/ACCESSIBLE RESTROOM SIGNAGE PER J/A960.
4. DOOR WITH THE FOLLOWING INTERNATIONAL SYMBOL OF ACCESSIBILITY (I.S.A.)

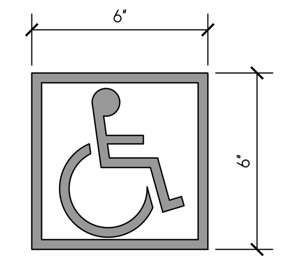

NOTE:
PROVIDE THIS SIGN AT MAIN ENTRY DOOR(S). MOUNT 60" ABOVE FINISH FLOOR TO CENTER OF SIGN. SIGN SHALL BE BLUE IN COLOR IN COMPLIANCE WITH CBC 11B-703.7.2.1

5. PROVIDE WEATHERSTRIPING AT DOOR.
6. DOOR WITH ½ INCH HIGH MAX. THRESHOLD PER CBC 11B-302 AND 11B-303 AND 11B-404.2.5.
7. PAINT INT. FACE(S) OF DOOR COLOR OF ROOM TOWARD WHICH IT FACES, SEE FIN. SCHED.
8. EXTERIOR DOOR PAINT TO MATCH ADJACENT WALL.
9. DOOR DOES NOT HAVE THRESHOLD; FLOOR FINISHES RUN UNDER DOOR UNINTERRUPTED OR ARE BUTTED WITH NO CHANGE IN HEIGHT.
10. DOOR COMPRISED OF TWO SLIDING, OVERLAPPING LEAVES.
11. INSULATED DOOR
12. AT ACCESSIBLE & ADAPTABLE UNITS, PROVIDE INTERLOCKING DEADBOLT AND LATCH.
13. PROVIDE FULL SOUND ATTENUATION GASKETING AT PERIMETER OF THIS DOOR.

DOOR & FRAME ELEVATIONS

SCALE: 1/4" = 1'-0"

NOTE - REFER TO SCHEDULE FOR DIMENSIONS AND JAMB, SILL AND HEAD DETAILS.

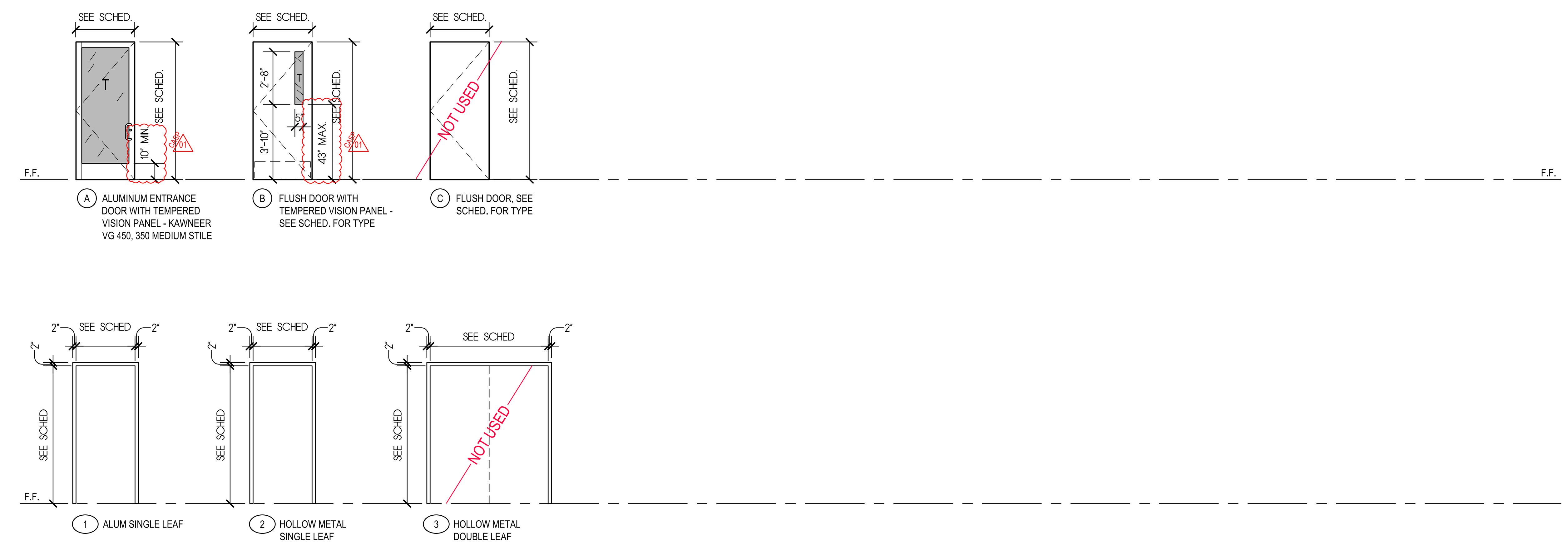

DOOR AND FRAME SCHEDULE - SCOPE OF HARDWARE CHANGES

NEW NUMBER	OLD NUMBER PER ORIG. PLN.	(E) OR (N) DOOR / FRAME	DOOR: WIDTH	DOOR: HEIGHT	DOOR: TYPE	DOOR: MATERIAL	DOOR: FINISH	DOOR: GLAZING	FRAME: TYPE	FRAME: MATERIAL	FRAME: FINISH	FRAME: GLAZING	FRAME: POWER & SIGNAL	SECURITY	HARDWARE GROUP	NOT USED	REMARKS / NARRATIVE OF CHANGES	NUMBER
100	1	E	3'-0"	8'-0"	A	AL	FF	DUAL	1	AL	FF	DUAL	S, L	CR	01		PROVIDE NEW CLOSER ONLY	100
101	2	E	3'-0"	8'-0"	A	AL	FF	DUAL	1	AL	FF	DUAL	S, L	CR	01		PROVIDE NEW CLOSER ONLY	101
112	32	E	3'-0"	7'-0"	B	HM	PT	DUAL	2	HM	MP	-	-	-	02		(N) CLOSER & LATCH; REMOVE AUTO OPENING DEVICE, TURN OVER TO THE COUNTY	112
118	4	E	4'-0"	7'-0"	B	HM	PT	DUAL	2	HM	MP	-	-	-	03		(N) CLOSER & LATCH; REMOVE AUTO OPENING DEVICE, TURN OVER TO THE COUNTY	118
124	5	E	3'-0"	7'-0"	A	AL	PT	DUAL	1	AL	FF	-	-	-	04		(N) CLOSER & LATCH; REMOVE AUTO OPENING DEVICE, TURN OVER TO THE COUNTY	124
127	50	E	3'-0"	7'-0"	A	AL	FF	DUAL	1	AL	FF	-	-	-	04		(N) CLOSER & LATCH; REMOVE AUTO OPENING DEVICE, TURN OVER TO THE COUNTY	127
128	-	N	3'-0"	7'-0"	B	HM	PT	DUAL	2	HM	MP	-	-	-	05			128
129	47	E	3'-0"	7'-0"	A	HM	PT	DUAL	2	HM	MP	-	-	-	06		(N) CLOSER & LATCH; REMOVE AUTO OPENING DEVICE, TURN OVER TO THE COUNTY	129
130	-	N	3'-0"	7'-0"	B	HM	PT	DUAL	2	HM	MP	-	-	-	07			130
135	56	E	3'-0"	7'-0"	A	AL	FF	DUAL	1	AL	FF	-	-	-	04		(N) CLOSER & LATCH; REMOVE AUTO OPENING DEVICE, TURN OVER TO THE COUNTY	135
136	79	E	3'-0"	7'-0"	A	AL	FF	DUAL	1	AL	FF	-	-	-	08		(N) CLOSER & LATCH; REMOVE AUTO OPENING DEVICE, TURN OVER TO THE COUNTY	136
149	63	E	3'-0"	7'-0"	A	AL	FF	DUAL	1	AL	FF	-	-	-	04		(N) CLOSER & LATCH; REMOVE AUTO OPENING DEVICE, TURN OVER TO THE COUNTY	149
153	70	E	3'-0"	7'-0"	A	AL	FF	DUAL	1	AL	FF	-	-	-	04		(N) CLOSER & LATCH; REMOVE AUTO OPENING DEVICE, TURN OVER TO THE COUNTY	153
156	69	E	3'-0"	7'-0"	B	HM	PT	DUAL	2	HM	MP	-	-	-	09		(N) CLOSER & LATCH; REMOVE AUTO OPENING DEVICE, TURN OVER TO THE COUNTY	156
160	85	E	3'-0"	7'-0"	B	HM	PT	DUAL	2	HM	MP	-	-	-	09		(N) CLOSER & LATCH; REMOVE AUTO OPENING DEVICE, TURN OVER TO THE COUNTY	160
161	80	E	3'-0"	7'-0"	A	AL	FF	DUAL	1	AL	FF	-	-	-	04		(N) CLOSER & LATCH; REMOVE AUTO OPENING DEVICE, TURN OVER TO THE COUNTY	161
164	81	E	3'-0"	7'-0"	B	HM	PT	DUAL	2	HM	MP	-	-	-	09		(N) CLOSER & LATCH; REMOVE AUTO OPENING DEVICE, TURN OVER TO THE COUNTY	164

DOOR HARDWARE SETS

PRODUCTS	SPECIFIED MANUFACTURER	APPROVED SUBSTITUTE
HINGES	STANLEY	HAGER, IVES
LOCKSETS	SCHLAGE	NONE
CYLINDERS	SCHLAGE	NONE
CLOSERS	LCN	HAGER
DROP PLATES	LCN	HAGER
LOCK PROTECTORS	IVES	HAGER, TRIMCO
FLOORSTOPS	TRIMCO	HAGER, IVES
KICKPLATES	IVES	HAGER, TRIMCO
SEALS	NGP	PEMKO, ZERO

GROUP 01:
DOOR 100, 101

1 EA. CLOSER 1450 FPC EDA TBSRT — ALUM
1 EA. DROP PLATE 1450-18PA (IF REQUIRED) — ALUM
1 EA. BLADE STOP SPACER 1450-61 (IF REQUIRED) — ALUM
BALANCE OF EXISTING HARDWARE TO REMAIN

GROUP 02:
DOOR 112

1 EA. STOREROOM LOCK ALX80P6 RHO — 626
1 EA. CLOSER 1450 RWPA TBSRT — ALUM
BALANCE OF EXISTING HARDWARE TO REMAIN

NOTE: VERIFY NEW LOCK WILL WORK WITH EXISTING DOOR BEFORE ORDERING

GROUP 03:
DOOR 118

1 EA. CLASSROOM LOCK ALX70P6 RHO — 626
1 EA. CLOSER 1450 RWPA TBSRT — ALUM
BALANCE OF EXISTING HARDWARE TO REMAIN

NOTE: VERIFY NEW LOCK WILL WORK WITH EXISTING DOOR BEFORE ORDERING

GROUP 04:
DOOR 124, 127, 135, 149, 153, 161

1 EA. CLASSROOM LOCK ALX70P6 RHO — 626
1 EA. CLOSER 1450 RWPA TBSRT — ALUM
1 EA. DROP PLATE 1450-18PA (IF REQUIRED) — ALUM
1 EA. BLADE STOP SPACER 1450-61 (IF REQUIRED) — ALUM
BALANCE OF EXISTING HARDWARE TO REMAIN

NOTE: VERIFY NEW LOCK WILL WORK WITH EXISTING DOOR BEFORE ORDERING

GROUP 05:
DOOR 128

3 EA. HINGES FBB179 4.5 X 4.5 — 652
1 EA. PASSAGE ALX10 RHO — 626
1 EA. FLOORSTOP 1211 — 626
3 EA. SILENCERS SR64 — GREY

GROUP 06:
DOOR 129

1 EA. PRIVACY W/ INDICATOR ND40 RHO OS-OCC — 626
1 EA. CLOSER 1450 RWPA TBSRT — ALUM
BALANCE OF EXISTING HARDWARE TO REMAIN

NOTE: VERIFY NEW LOCK WILL WORK WITH EXISTING DOOR BEFORE ORDERING

GROUP 07:
DOOR 130

3 EA. HINGES FBB179 4.5 X 4.5 — 652
1 EA. PASSAGE ALX10 RHO — 626
1 EA. CLOSER 1450 CUSH TBSRT @ 90DEG — ALUM
1 EA. KICKPLATE 8400 10 X 2LDW B-CS — 630
1 SET SEALS 5040C — CHARCOAL

GROUP 08:
DOOR 136

1 EA. CLASSROOM LOCK ALX70P6 RHO — 626
1 EA. CLOSER 1450 CUSH TBSRT @ 90DEG — ALUM
1 EA. DROP PLATE 1450-18PA (IF REQUIRED) — ALUM
1 EA. BLADE STOP SPACER 1450-61 (IF REQUIRED) — ALUM
BALANCE OF EXISTING HARDWARE TO REMAIN

NOTE: VERIFY NEW LOCK WILL WORK WITH EXISTING DOOR BEFORE ORDERING

GROUP 09:
DOOR 156, 160, 164

1 EA. STOREROOM LOCK ALX80P6 RHO — 626
1 EA. CLOSER 1450 RWPA TBSRT — ALUM
1 EA. LOCK PROTECTOR LG12 — 630
BALANCE OF EXISTING HARDWARE TO REMAIN

NOTE: VERIFY NEW LOCK WILL WORK WITH EXISTING DOOR BEFORE ORDERING

Copyright © 2026

All ideas, designs, arrangements and plans indicated or represented by this drawing are owned by, and the property of, NICHOLS, MELBURG and ROSSETTO and were created, evolved and developed for use on, and in conjunction with, the specified project. None of such ideas, designs, arrangements or plans shall be used by, or disclosed to any person, firm or corporation for any purpose whatsoever without the written permission of NICHOLS, MELBURG and ROSSETTO.

NICHOLS MELBURG & ROSSETTO
ARCHITECTS + ENGINEERS
555 MAIN STREET, SUITE 300
CHICO, CA. 95928
(530) 891-1710 (530) 891-0138 FAX
http://www.nmrdesign.com

CONSULTANTS

LICENSE STAMPS

LICENSED ARCHITECT
DEVEN CARTER
C 34730
REN. 5/31/27
STATE OF CALIFORNIA

PROJECT NAME

RENOVATION FOR

Humboldt County Animal Shelter

980 Lycoming Ave
McKinleyville, CA 95519

SHEET TITLE

DOOR & FRAME SCHEDULE & ELEVATIONS

DRAWING STATUS

CONSTRUCTION DOCUMENTS

BLDG. DEPT. SUBMITTAL

REVISIONS

Sym.	Description	Date
CASP 01	CASP	2026-04-03

Drawn By	KAJ
Date Issued	04-03-2026
Scale	AS NOTED
Project No.	17-6430

SHEET No.

A710

Login Name: TimS
Plot Date: April 02, 2026 - 2:41 pm
File Name: N:\Projects\6000.Civic\2017\17-6430 Humboldt County ADA Compliance\15 Animal Shelter\1.0 DWGs\17-6430.15-A710_AS-DOORS.dwg
XREFS: x-tit

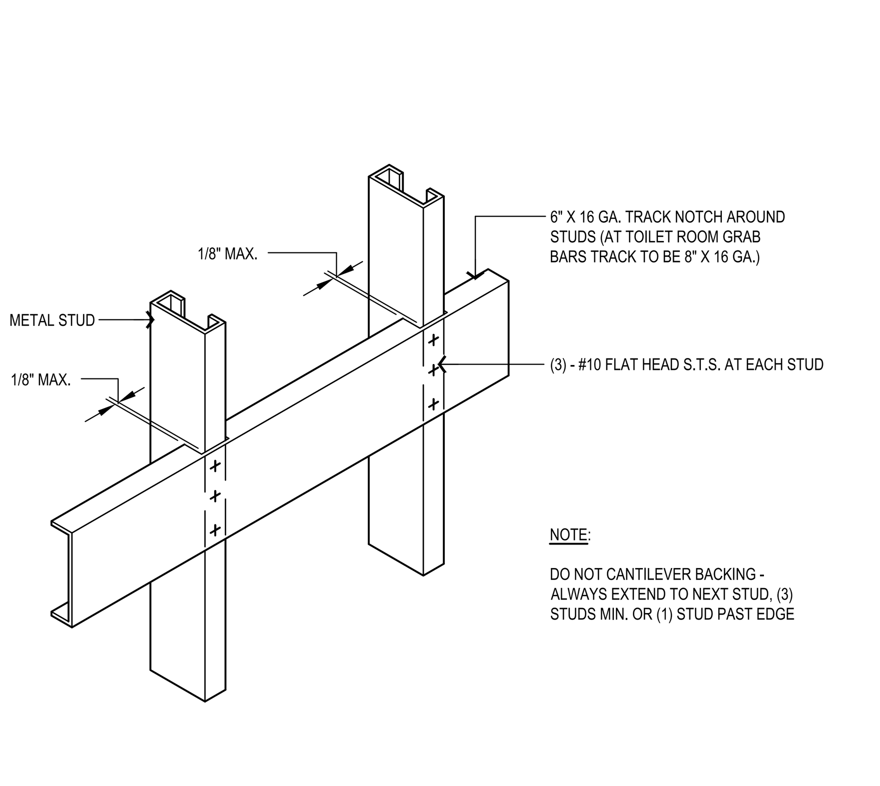

A900

TYPICAL BACKING PLATE (ITEMS MORE THAN 50 LBS)

SCALE: N.T.S. — 17

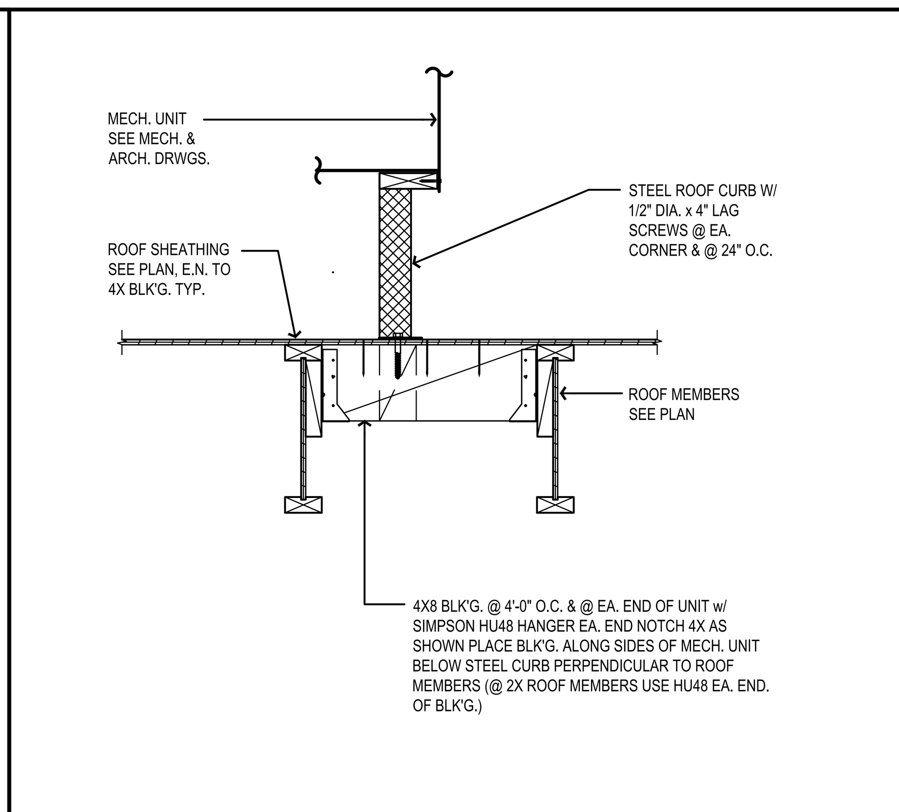

ROOF EQUIPMENT CURB SUPPORT

SCALE: 1" = 1'-0" — 13

INTERIOR PARTITION NOTES:

1. PARTITION TYPES ARE SHOWN IN ASSEMBLY SCHEDULE. NOT ALL PARTITION TYPES MAY BE USED.
2. PARTITION TYPES ARE INDICATED ON FLOOR PLANS. TYPICAL PARTITION TYPES ARE GRAPHICALLY INDICATED ON PLANS. PARTITION TYPES OTHER THAN TYPICAL ARE INDICATED BY WALL ASSEMBLY TAGS.
3. PROVIDE WATER RESISTANT GYPSUM BOARD 4'-0" EACH SIDE OF PLUMBING FIXTURES. SEE SPECIFICATION FOR SEALING OF CUT EDGES. PROVIDE TILE BACKING BOARD AT SHOWERS. PROVIDE WATER RESISTANT GYPSUM BOARD AT ALL PUBLIC BATHROOMS.
4. RATED FIRE AND SMOKE PARTITIONS SHALL BE CONTINUOUS FROM FLOOR TO STRUCTURE ABOVE AND ACROSS AND AROUND COLUMNS. FURRED COLUMN ENCLOSURES SHALL NOT BE CONSIDERED PART OF THE FIRE-RATED ASSEMBLY. PARTITIONS SHALL BE TIGHT-FITTING AROUND ALL STRUCTURAL SHAPES AND PENETRATIONS. RATED PARTITION TERMINATING AT AN EXTERNAL WALL SHALL MAINTAIN ITS REQUIRED RATING TO EXTERNAL SYSTEM. ALIGN DIFFERING PARTITION TYPES SO THAT WALL PLANES CONTINUE UNBROKEN IN ROOMS AND CORRIDORS UNLESS OTHERWISE NOTED.

INTERIOR PARTITION NOTES

SCALE: N/A — 9

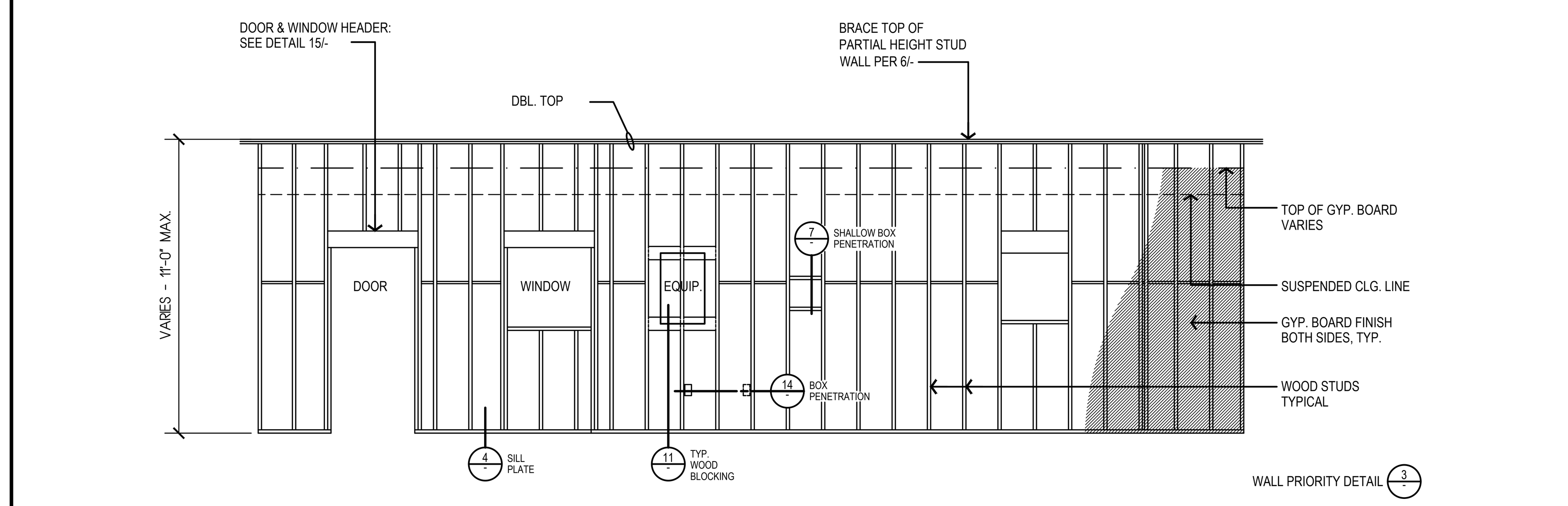

NOTE: RATED PARTITIONS WITH GYPSUM BOARD FULL HEIGHT ON BOTH SIDES OF WALL SHALL NOT HAVE ANY HEIGHT RESTRICTIONS

WALL FRAMING ELEVATION - NON BEARING

SCALE: N.T.S. — 1

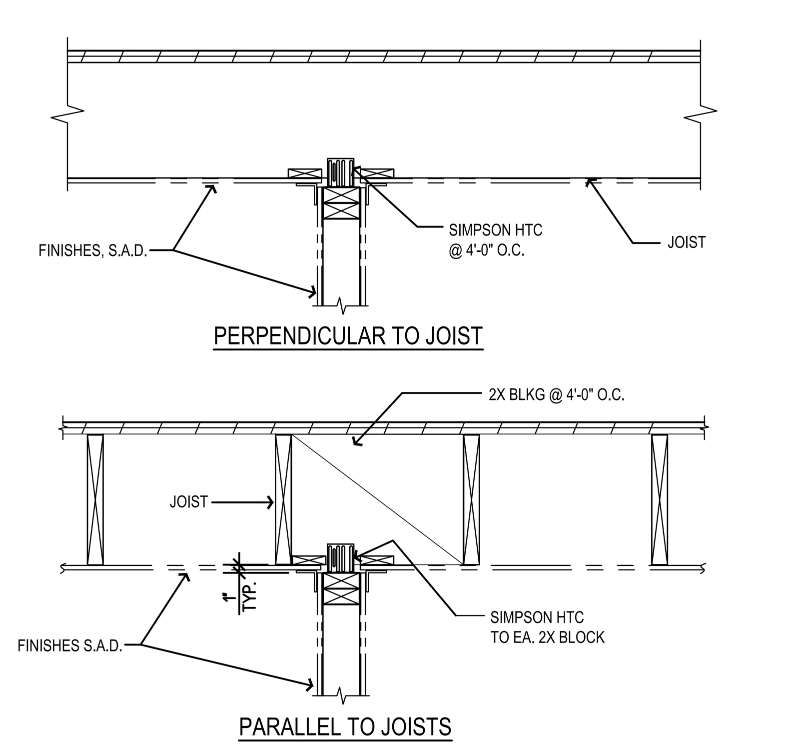

NON-BEARING WALL LATERAL RESTRAINT

SCALE: 1" = 1'-0" — 18

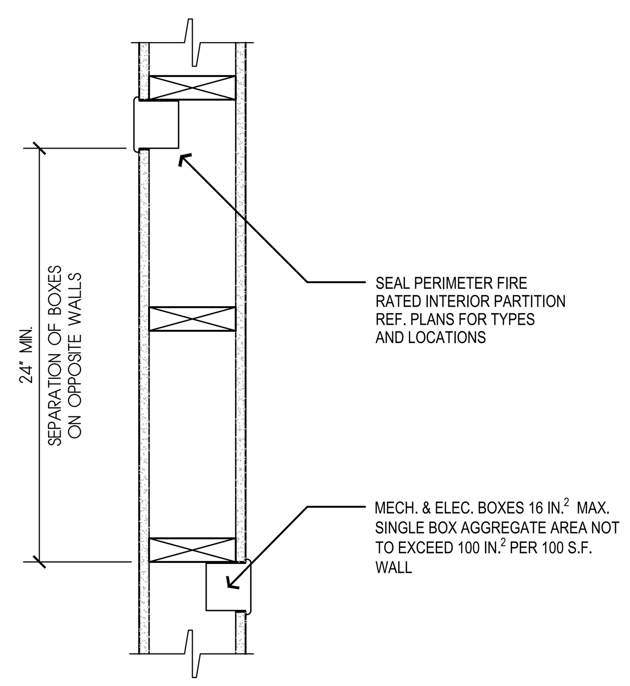

BOX PENETRATION DETAIL

SCALE: 1 1/2"=1'-0" — 14

NOT USED

SCALE: 1" = 1'-0" — 10

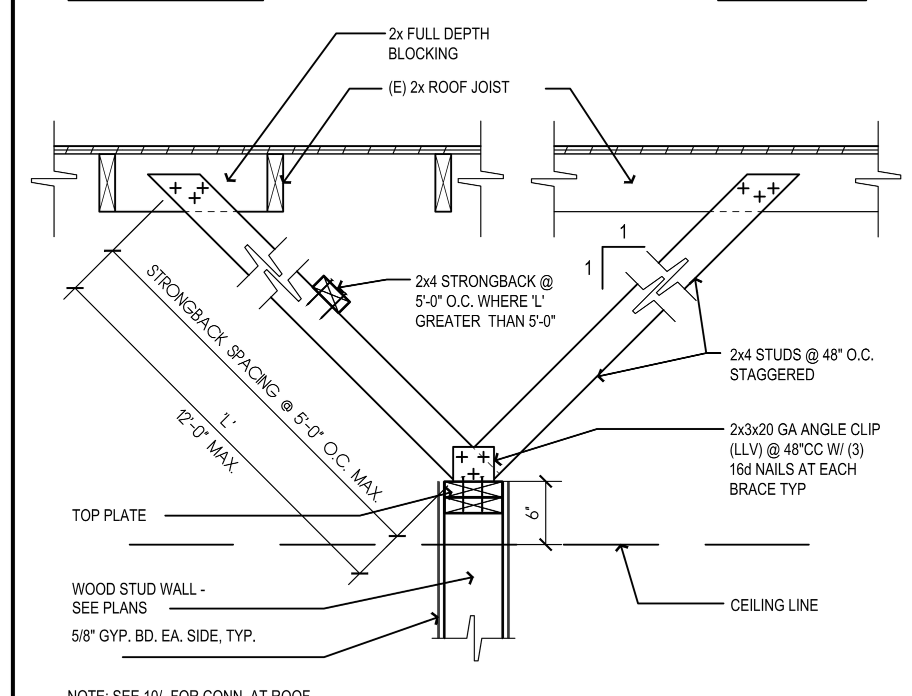

NOTE: SEE 10/- FOR CONN. AT ROOF TRUSSES

TOP OF WALL BRACING

SCALE: N.T.S. — 6

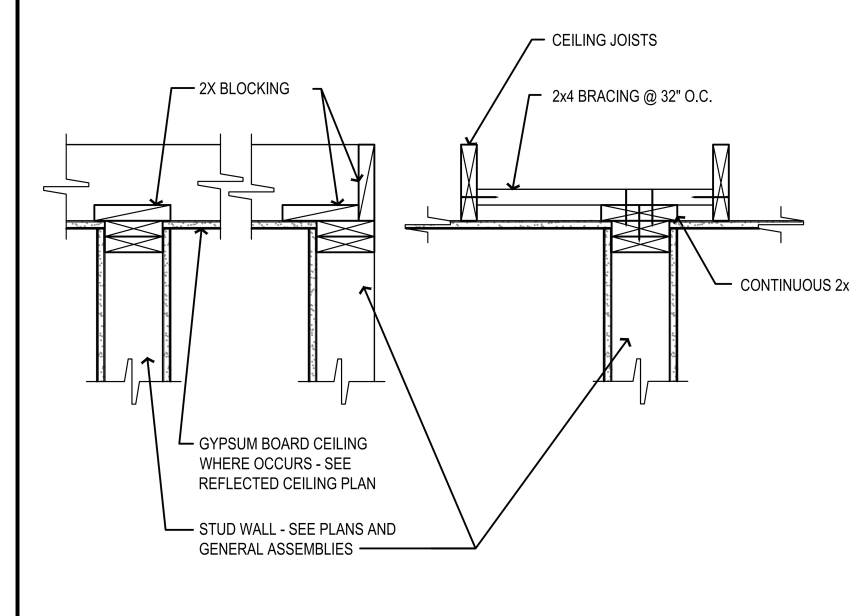

SEE STRUCTURAL DRAWINGS FOR MORE INFORMATION

NON-BEARING WALL CONNECTION TO CEILING FRAMING

SCALE: 1" = 1'-0" — 2

HOLE SCHEDULE	
WALL THICKNESS	HOLE DIA.
3 1/2"	1"
5 1/2"	1 3/4"
7 1/4"	2 1/4"
9 1/4"	3"
11 1/4"	3 3/4"

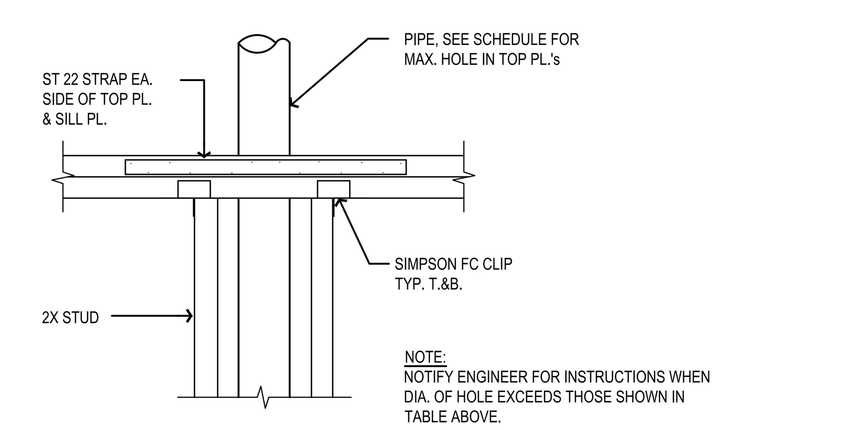

NOTE:
NOTIFY ENGINEER FOR INSTRUCTIONS WHEN DIA. OF HOLE EXCEEDS THOSE SHOWN IN TABLE ABOVE.

PIPE THROUGH STUD WALL

SCALE: 1" = 1'-0" — 19

INTERIOR NON-BEARING HEADER SCHED.	
SPAN	HEADER SIZE (depth)
UP TO 3'-4"	*(3")
3'-4" to 6'-6"	3 1/2"
6'-6 to 10'-0"	5 1/2"
10'-0 to 13'-0"	7 1/4"
13'-0 to 16'-8"	9 1/4"

(*) INTERNAIL DBL. 2x's w/ 2- 10d's @ 16" o.c. & 4" FROM ENDS

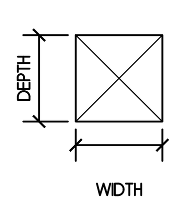

SECTION OF HEADER

INTERIOR NON-BEARING HEADER SCHEDULE

SCALE: N.T.S. — 15

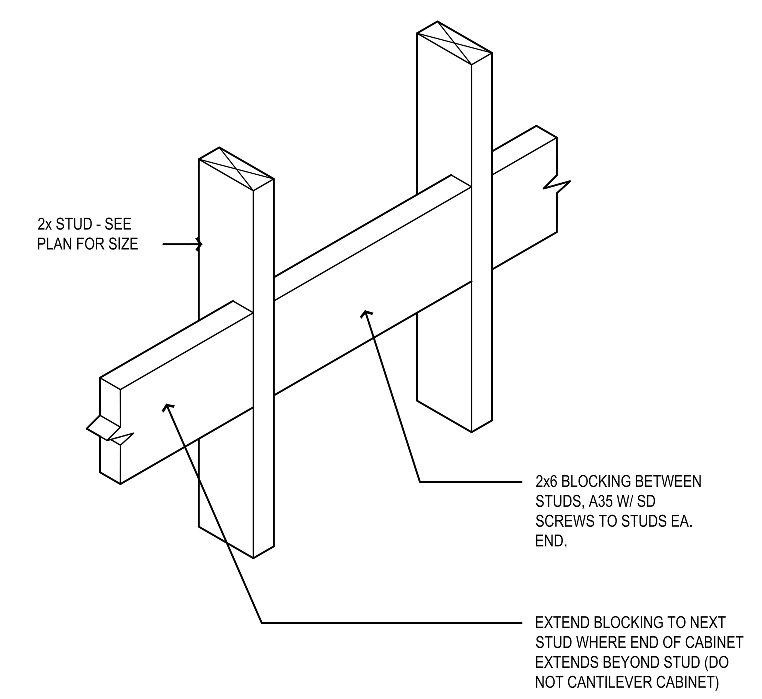

2 X 6 BLOCKING FOR CABINETS

SCALE: N.T.S. — 11

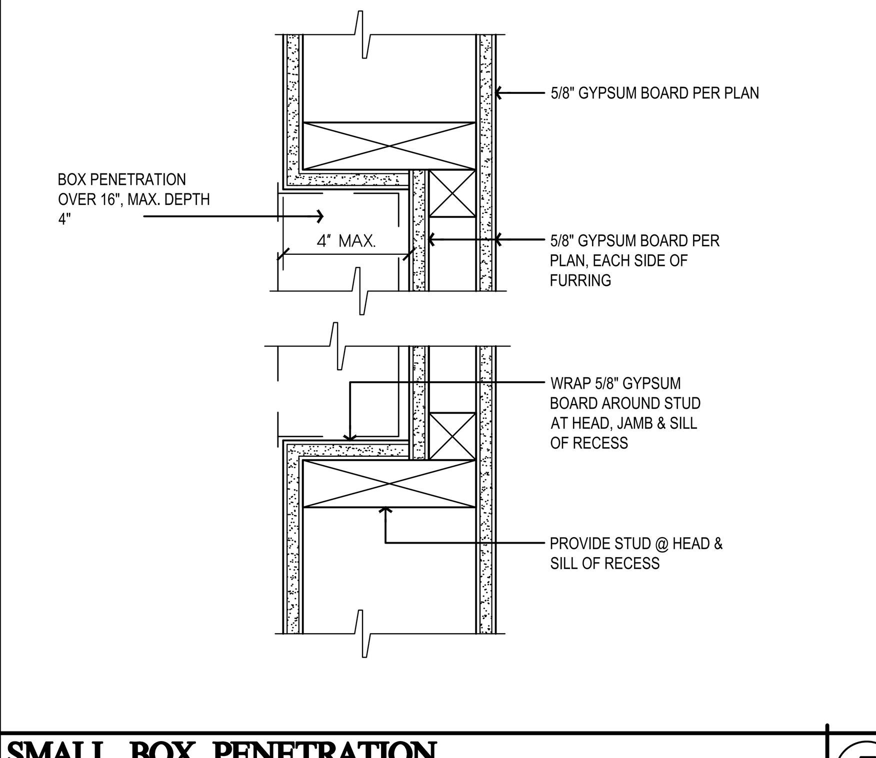

SMALL BOX PENETRATION

SCALE: N.T.S. — 7

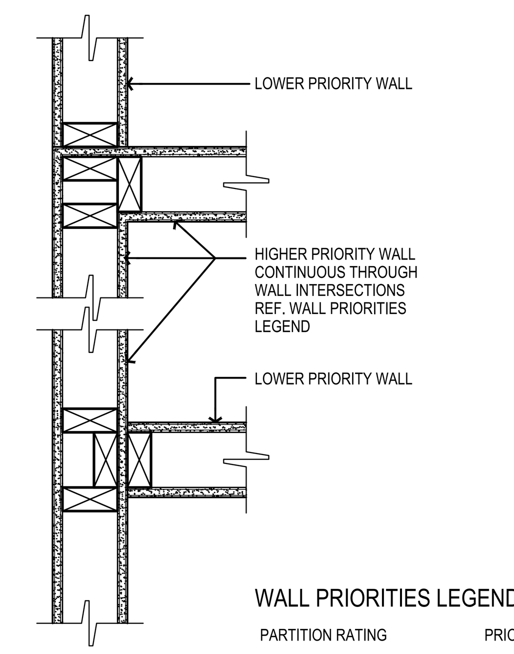

WALL PRIORITIES LEGEND

PARTITION RATING	PRIORITY
2 HOUR FIRE/SMOKE BARRIER	1 (HIGHEST)
2 HOUR FIRE WALL OR 2 HOUR SHAFT WALL	2
1 HOUR FIRE/SMOKE BARRIER	3
1 HOUR FIRE WALL	4
NON-RATED ACOUSTICAL WALL	5 (LOWEST)

WALL PRIORITY HIERARCHY

SCALE: 1 1/2"=1'-0" — 3

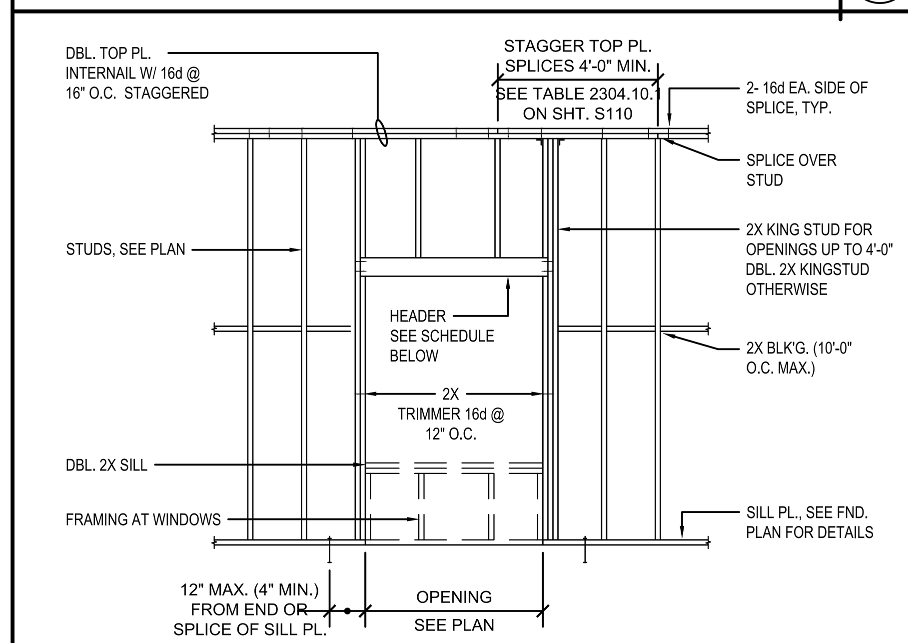

HEADER DEPTH	MAX OPENING
3 1/2"	4'-0"
5 1/2"	8'-0"
7 1/4"	12'-0"

NOTE:
SEE TABLE 2304.10.1 ON SHT. S110 FOR TYPICAL NAILING REQUIREMENTS

NON-LOAD-BEARING INTERIOR WOOD HEADER DETAIL & SPAN SCHEDULE

SCALE: 1"=1'-0" — 20

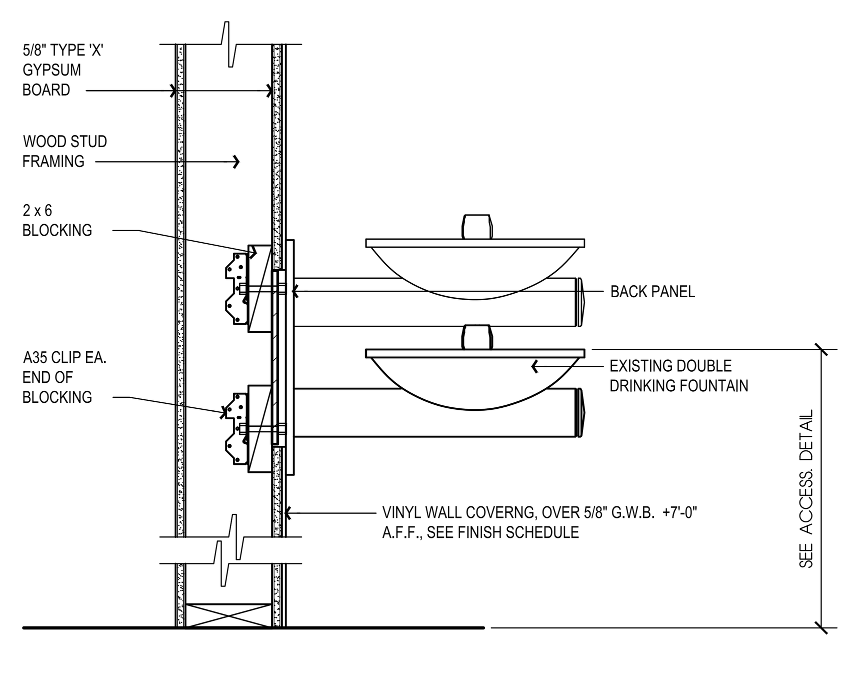

BLOCKING AT DRINKING FOUNTAINS

SCALE: N.T.S. — 16

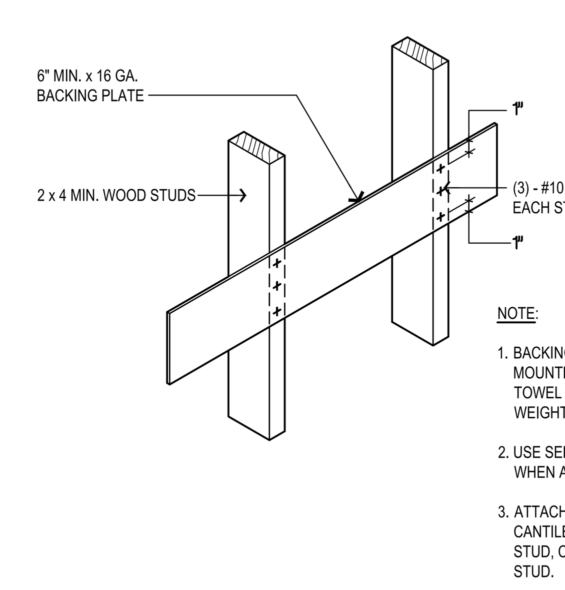

NOTE:

1. BACKING PLATE FOR MISC. ITEMS, I.E. SURFACE MOUNTED MIRRORS, WASTE RECEPTACLES, TOWEL DISPENSERS, EQUIPMENT, ETC. MAX WEIGHT - 50 LBS
2. USE SELF-TAPPING SHEET WOOD SCREWS WHEN ATTACHING ITEMS TO BACKING PLATE
3. ATTACH TO MINIMUM OF 3 STUDS; DO NOT CANTILEVER IF SUPPORT IS NEEDED BEYOND STUD, CONTINUE BACKING PLATE TO NEXT STUD.
4. THIS DETAIL MAY BE USED IN LIEU OF 11/-

MISC. BLOCKING FOR ITEMS UP TO 50 LBS.

SCALE: N.T.S. — 12

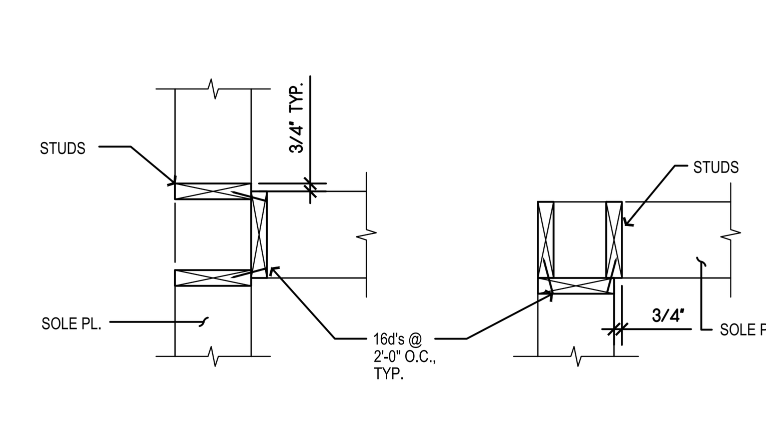

PLAN VIEW

NON-SHEARWALL INTERSECTION

SCALE: N.T.S. — 8

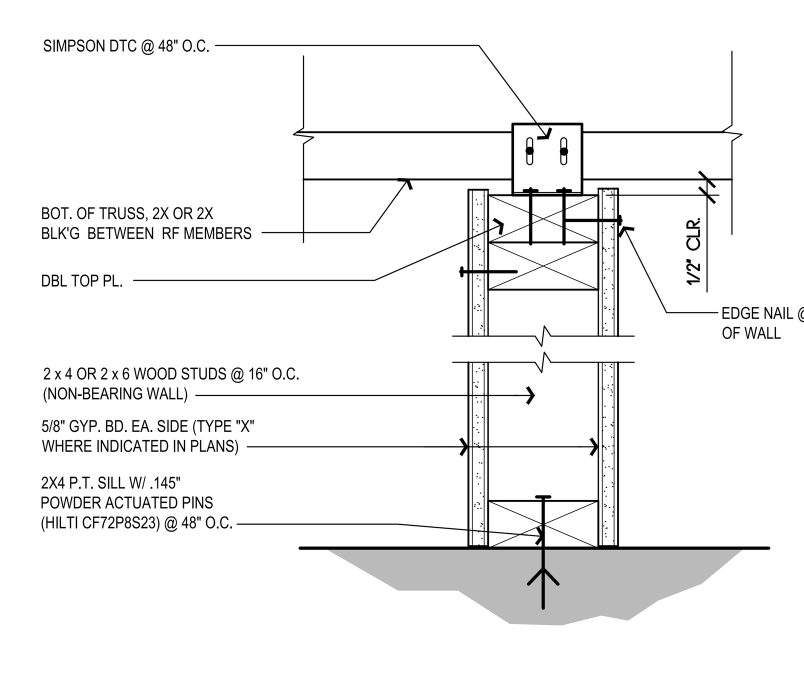

TYP. INTERIOR WOOD STUD WALL

SCALE: 3"=1'-0" — 4

Copyright © 2025
All ideas, designs, arrangements and plans indicated or represented by this drawing are owned by, and the property of, NICHOLS, MELBURG and ROSSETTO and were created, evolved and developed for use on, and in conjunction with, the specified project. None of such ideas, designs, arrangements or plans shall be used by, or disclosed to any person, firm or corporation for any purpose whatsoever without the written permission of NICHOLS, MELBURG and ROSSETTO.

NICHOLS MELBURG & ROSSETTO
ARCHITECTS + ENGINEERS
300 KNOLLCREST DRIVE
REDDING, CA. 96002
(530) 222-3300 (530) 222-3538 FAX
http://www.nmrdesign.com

CONSULTANTS

LICENSE STAMPS

LICENSED ARCHITECT DEVEN CARTER C 34730 REN. 5/31/27 STATE OF CALIFORNIA

PROJECT NAME

RENOVATION FOR

Humboldt County Animal Shelter

980 Lycoming Ave
McKinleyville, CA 95519

SHEET TITLE

SCHEDULES

DRAWING STATUS

CONSTRUCTION DOCUMENTS

BLDG. DEPT. SUBMITTAL

REVISIONS

Sym.	Description	Date

Drawn By	KAJ
Date Issued	04-03-2026
Scale	NTS
Project No.	17-6430

SHEET No.

A900

Login Name: Kurt_J
Plot Date: December 05, 2025 - 109 pm
File Name: N:\Projects\6000\Civic\2017\17-6430 Humboldt County ADA Compliance\15 Animal Shelter\10 DWGs\17-6430.15-A900__AS-INTDET.dwg
XREFS: x-ttt

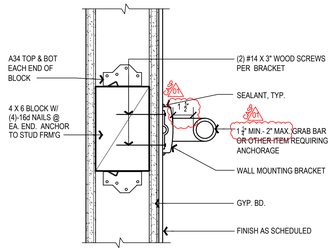

A940

BLOCKING FOR GRAB BAR, ETC. (ITEMS 50 LBS. OR MORE)

SCALE: 3"=1'-0" (5)

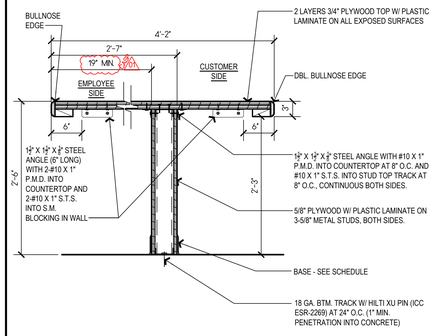

A940

TRANSACTION COUNTER SECTION

SCALE: 1"=1'-0" (1)

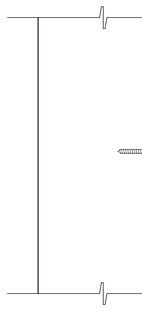

A940

DOOR BUMPER AT WALL

SCALE: 6"=1'-0" (6)

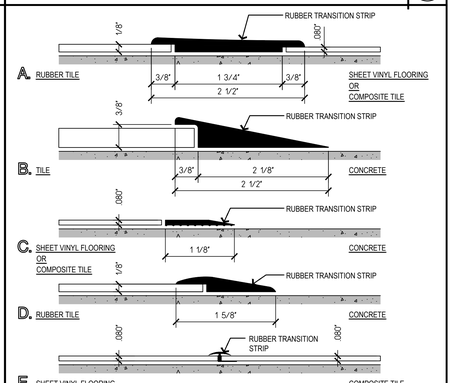

A940

TRANSITION STRIPS

SCALE: 6"=1'-0" (2)

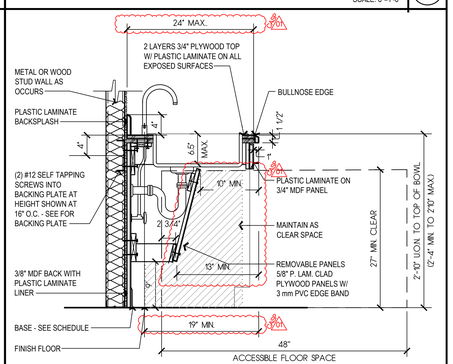

A940

BASE CABINET WITH ACCESSIBLE SINK

SCALE: 1"=1'-0" (3)

NOT USED

SCALE: 1" = 1'-0" (7)

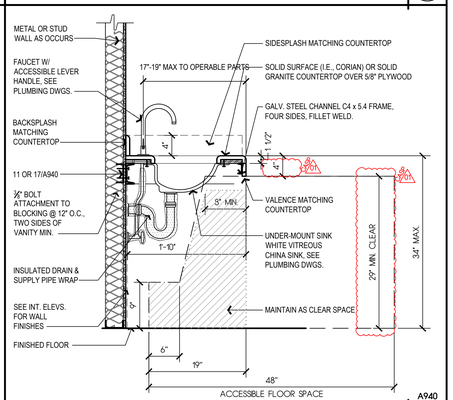

A940

ACCESSIBLE VANITY AT RESTROOMS

SCALE: 1"=1'-0" (4)

Copyright © 2026

All ideas, designs, arrangements and plans indicated or represented by this drawing are owned by, and the property of, NICHOLS, MELBURG and ROSSETTO and were created, evolved and developed for use on, and in conjunction with, the specified project. None of such ideas, designs, arrangements and plans shall be used by or disclosed to any person, firm or corporation for any purpose whatsoever, without the written permission of NICHOLS, MELBURG and ROSSETTO.

NICHOLS MELBURG & ROSSETTO
ARCHITECTS + ENGINEERS
300 KNOLLCREST DRIVE
REDDING, CA. 96002
(530) 222-3300 (530) 222-3538 FAX
http://www.nmrdesign.com

CONSULTANTS

LICENSE STAMPS

LICENSED ARCHITECT
DEVEN CARTER
C 34730
REN. 5/31/26
STATE OF CALIFORNIA

PROJECT NAME

RENOVATION FOR

Humboldt County Animal Shelter

980 Lycoming Ave
McKinleyville, CA 95519

SHEET TITLE

CASEWORK & INTERIOR DETAILS

DRAWING STATUS

CONSTRUCTION DOCUMENTS

BLDG. DEPT. SUBMITTAL

REVISIONS

Sym.	Description	Date
01	CASP	2026-04-03

Drawn By	KAJ
Date Issued	04-03-2026
Scale	NTS
Project No.	17-6430

SHEET No.

A940

Login Name: TimG
Plot Date: April 03, 2026 - 11:01 am
File Name: N:\Projects\6000Ole\2017\17-6430 Humboldt County ADA Compliance\S Animal Shelter\10 DWGs\17-6430 S-A940_AS-CASEWRK.dwg
Plotted by: KAJ

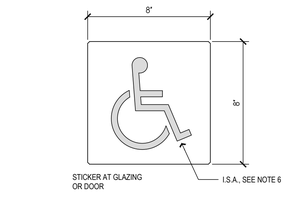

A ACCESSIBLE ENTRANCE IDENTIFICATION STICKER
3" = 1'-0"

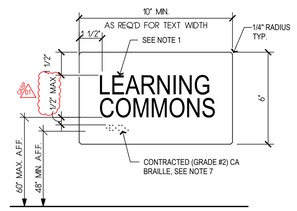

B ROOM IDENTIFICATION
3" = 1'-0"

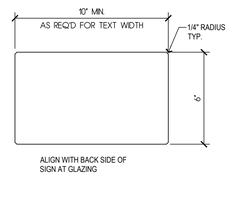

C BLANK SIGNAGE PLATE
3" = 1'-0"

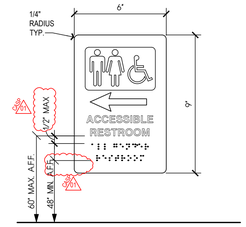

D1 DIRECTIONAL SIGN - RESTROOM
3" = 1'-0"

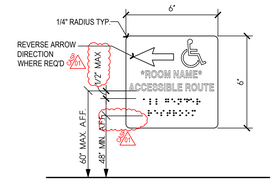

D2 DIRECTIONAL SIGN - ACCESSIBLE ROUTE
3" = 1'-0"

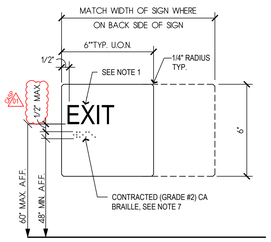

E1 EXIT
3" = 1'-0"

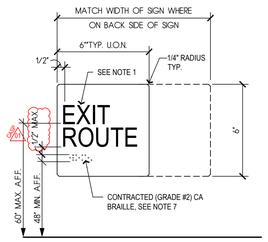

E2 EXIT ROUTE
3" = 1'-0"

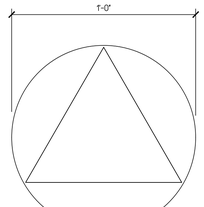

DOOR SYMBOL SHALL HAVE A 1/4" THICK EQUILATERAL TRIANGLE INSCRIBED WITHIN (AND SUPERIMPOSED ONTO) A 12" Ø CIRCLE THAT IS ALSO 1/4" THICK. VERTICIES OF TRIANGLE SYMBOL SHALL BE LESS THAN 1/4" FROM EDGE OF CIRCLE SYMBOL, w/ A VERTEX POINTING UPWARD. TRIANGLE COLOR SHALL CONTRAST w/ CIRCLE COLOR.

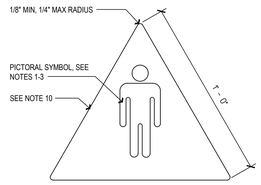

MENS FACILITY DOORS SHALL HAVE AN EQUILATERAL TRIANGLE 1/4" THICK w/ 12" SIDES AND A VERTEX POINTING UPWARDS.

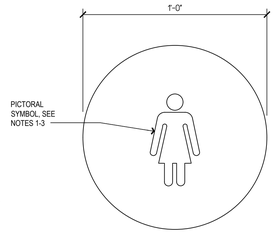

WOMENS FACILITY DOORS SHALL HAVE A 12" CIRCLE 1/4" THICK.

H TOILET ROOM DOOR SYMBOLS
3" = 1'-0"

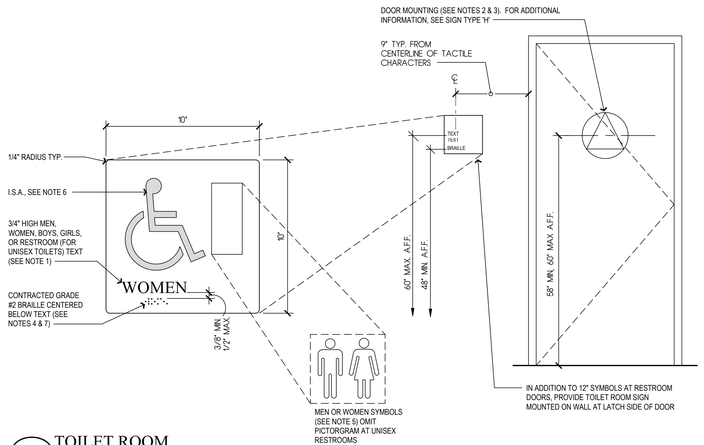

J TOILET ROOM
3" = 1'-0"

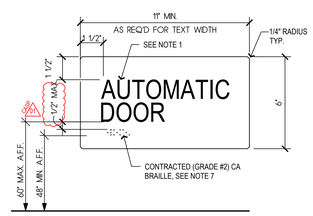

K AUTOMATIC DOOR I.D.
3" = 1'-0"

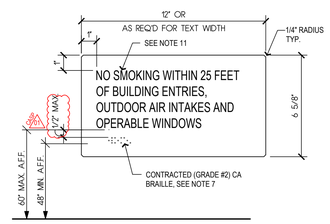

N NO SMOKING SIGN
3" = 1'-0"

SIGNAGE TYPES

PROVIDE RESTROOM SIGNAGE AS REQUIRED ON THE DOOR SCHEDULE. IN ADDITION TO THE 12" SYMBOLS ON THE RESTROOM DOORS, PROVIDE SIGNAGE MOUNTED AT 60" MAX. TO BASELINE OF HIGHEST RAISED TEXT ON WALL AND +48" MIN. TO BASELINE OF BOTTOM LINE OF BRAILLE.

NOTES:
SIGNAGE SHALL COMPLY WITH 2025 CBC 11B-216 & 11B-703

1. CHARACTERS ON SIGNS SHALL BE UPPERCASE, SANS SERIF AND RAISED. UNLESS OTHERWISE NOTED, CHARACTERS SHALL BE 1 1/4" HIGH.
2. IDENTIFYING SYMBOLS CENTERED ON THE DOOR @ +58" MIN. & +60" MAX. AFF. SIGN COLOR SHALL CONTRAST WITH THE DOOR COLOR.
3. THE SYMBOL SHALL BE MOUNTED WITHIN 1" OF THE VERTICAL CENTERLINE OF THE DOOR.
4. WHERE A TACTILE SIGN IS PROVIDED AT A DOOR, THE SIGN SHALL BE LOCATED ALONGSIDE THE LATCH SIDE. SIGNS CONTAINING TACTILE CHARACTERS SHALL BE LOCATED SO THAT A CLEAR FLOOR SPACE OF 18" X 18" MIN. CENTERED ON THE TACTILE CHARACTERS IS PROVIDED BEYOND THE ARC OF ANY DOOR SWING BETWEEN THE CLOSED AND 45 DEGREE OPEN POSITION.
5. ~~PICTORAL~~ SYMBOL SIGN: THE OUTSIDE DIMENSION OF THE PICTOGRAM FIELD SHALL BE A MINIMUM OF 6" IN HEIGHT, 2025 CBC 11B-703.6.1
6. INTERNATIONAL SYMBOL OF ACCESSIBILITY (I.S.A.): SYMBOL SHALL CONSIST OF A WHITE FIGURE ON BLUE BACKGROUND (BLUE SHALL BE EQUAL TO COLOR FS 15090 IN FEDERAL STANDARD 595C), 2025 CBC 11B-703.7.2.1
7. BRAILLE DIMENSIONS SHALL COMPLY WITH THE TABLE BELOW, AS FOUND IN 2025 CBC 11B-703.3.1
8. PERMANENT NON-REMOVABLE SELF ADHESIVE STICKER - PROVIDED & INSTALLED BY BLEACHER MANUFACTURER.
9. INTERNATIONAL SYMBOL OF ACCESS FOR HEARING LOSS, 2025 CBC 11B-703.7.2.4
10. EDGES SHALL BE EASED OR ROUNDED AT 1/16" INCH MIN. OR CHAMFERED AT 1/8" INCH MAX. VERTICES SHALL BE RADIUSED BETWEEN 1/8 INCH MIN AND 1/4 INCH MAX, 2025 CBC 11B.703.7.2.6.4
11. UPPER CASE CHARACTER HEIGHT TO BE MINIMUM 5/8" TALL PER 11B-703.2.5

TABLE 11B-703.1.1
BRAILLE DIMENSIONS

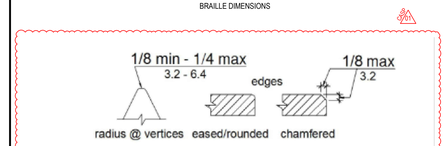

FIGURE 11B-703.7.2.6.4
EDGES AND VERTICES ON GEOMETRIC SYMBOLS

SIGNAGE LEGEND

TYPE		CODE REFERENCE	INSTALLATION
A	ACCESSIBLE ENTRANCE IDENTIFICATION SIGN	11B.216.2	OFCI
B	ROOM IDENTIFICATION SIGN	11B.216.2	OFCI
C	BLANK SIGNAGE PLATE	11B.703.7.2.6.4	OFCI
D1	DIRECTIONAL SIGN - RESTROOM	11B-216.2, 11B-703.5	OFCI
D2	DIRECTIONAL SIGN - ACCESSIBLE ROUTE	11B-216.2, 11B-703.5	OFCI
E1	EXIT SIGN	1009.10, 11B-216.4.1, 11B-703.5	OFCI
E2	EXIT ROUTE SIGN	1009.10, 11B-216.4.1, 11B-703.5	OFCI
H	TOILET ROOM IDENTIFICATION DOOR SIGN	11B-703.7.2.6	OFCI
J	TOILET ROOM IDENTIFICATION WALL SIGN	11B-703.5	OFCI
K	AUTOMATIC DOOR IDENTIFICATION SIGN	11B-404.2.9 EXCEPTION 2D	OFCI
N	NO SMOKING SIGN	11B-703	OFCI

KEY:
OFCI OWNER FURNISHED, CONTRACTOR INSTALLED

Copyright © 2026
All ideas, designs, arrangements and plans indicated or represented by this drawing are owned by, and the property of, NICHOLS, MELBURG and ROSSETTO and were created, evolved and developed for use on, and in conjunction with, the specified project. None of such ideas, designs, arrangements and plans shall be used by or disclosed to any person, firm or corporation for any purpose whatsoever without the written permission of NICHOLS, MELBURG and ROSSETTO.

NICHOLS MELBURG & ROSSETTO
ARCHITECTS + ENGINEERS
300 KNOLLCREST DRIVE
REDDING, CA. 96002
(530) 222-3300 (530) 222-3538 FAX
http://www.nmrdesign.com

CONSULTANTS

LICENSE STAMPS

LICENSED ARCHITECT
DEVEN CARTER
C 34730
REN. 5/31/27
STATE OF CALIFORNIA

PROJECT NAME

RENOVATION FOR

Humboldt County Animal Shelter

980 Lycoming Ave
McKinleyville, CA 95519

SHEET TITLE

SIGNAGE

DRAWING STATUS

CONSTRUCTION DOCUMENTS

BLDG. DEPT. SUBMITTAL

REVISIONS

Sym.	Description	Date
1	CASP	2026-04-03

Drawn By	KAJ
Date Issued	04-03-2026
Scale	AS NOTED
Project No.	17-6430

SHEET No.

A960

Login Name: TimG
Plot Date: April 03, 2026 - 11:19 am
File Name: N:\Projects\6000\Acad\2017\17-6430 Humboldt County ADA Compliance\5 Animal Shelter\10 DWGs\17-6430\15-A960_AS-SIGNAGE.dwg
Plotted to PMP.pc3

ROOFTOP UNIT SCHEDULE

ID	Manufacturer	Model	Nominal Tonnage	Supply Fan SA CFM	Supply Fan OA CFM	Supply Fan Ext S.P.	Cooling Total MBh	Cooling Sensible MBh	Heating Input MBh	Heating Output MBh	Heating Fuel	Heating AFUE%	Electrical Data Service	Electrical Data MCA	Electrical Data MOCP	Operating Weight (lbs)	Dimensions	Notes
AC-1	TRANE	YSK060	5	1,995	350	0.75"	62	48	80	64.8	NG	81%	208/3/60	29	45	800	45"W x 70"L x 48"H	1 - 6
AC-3	TRANE	YSK036	3	1,080	150	0.75"	39	31	80	64.8	NG	81%	208/3/60	23	30	760	45"W x 70"L x 48"H	1 - 6
AC-4	TRANE	YSK060	5	1,995	295	0.75"	62	48	80	64.8	NG	81%	208/3/60	29	45	800	45"W x 70"L x 48"H	1 -6, 8
AC-5	TRANE	YSK036	3	1,440	140	0.75"	39	31	80	64.8	NG	81%	208/3/60	23	30	760	45"W x 70"L x 48"H	1 - 7

NOTES:
1. MOUNT ON EXISTING ROOF CURB.
2. DOWNFLOW LOW LEAK ECONOMIZER WITH BAROMETRIC RELIEF.
3. HINGED ACCESS PANELS WITH 2" MERV 13 FILTERS.
4. R-454B REFRIGERANT.
5. 2-STAGE GAS HEATING WITH STAINLESS STEEL HEAT EXCHANGER.
6. CORROSION RESISTANCE COATING FOR THE ENTIRE UNIT (CASING, EVAP COIL, CONDENSER COIL), ALLDURA 25,000+ HOUR SALT SPRAY TEST.
7. INTERLOCK WITH ERV-1.
8. INTERLOCK WITH ERV-2.

ENERGY RECOVERY VENTILATOR SCHEDULE

ID	Manufacturer	Model	Location	OA ESP	EA ESP	OA Rate	EA Rates	Electrical Data Service	Electrical Data MCA	Electrical Data MOCP	Dimensions	Weight (lbs)	Notes
ERV-1	GREENHECK	ERV-20-15L	ROOF	0.5	0.75	1300	1300	208/3/60	10.8	15	62"L x 51"W x 46"H	700	1 - 6, 8
ERV-2	GREENHECK	ERV-20-30L	ROOF	0.5	1.0	1700	1700	208/3/60	15.4	20	62"L x 51"W x 46"H	420	1 - 6, 7

NOTES:
1. DOUBLE-WALL OUTDOOR CONSTRUCTION WITH PERMATECTOR COATING FOR CASING AND ALL INTERIOR COMPONENTS.
2. DOWN DISCHARGE, MOUNT ON EXISTING ROOF CURB.
3. 2" MERV 13 OA FILTERS, 2" MERV 8 EA FILTERS
4. ENERGY RECOVERY WHEEL.
5. SUPPLY AND EXHAUST WEATHERHOOD.
6. LOW-LEAKAGE OUTDOOR AIR AND EXHAUST AIR DAMPERS.
7. PELICAN THERMOSTAT FOR SCHEDULING.
8. INTERLOCK ERV WITH AC-4
9. INTERLOCK ERV WITH AC-5

MINI-SPLIT SCHEDULE

ID	Service	Manufacturer	Model	Cooling MBh	Cooling Rated Conditions	Heating MBh	Heating Rated Conditions	Electrical Data Service	Electrical Data MCA	Electrical Data MOCP	Dimensions	Weight (lbs)	Notes
HP-1	FC-1	MITSUBISHI	PUZ-AK12NL	12.0	80°F DB/67°F WB, 95° OAT	20.0	70°F DB / 43° OAT	208/1/60	16	20	35"W x 12"D x 25"H	105	1 - 4
FC-1	140 TEL/DATA	MITSUBISHI	PKA-AL12NL	12.2	80°F DB/67°F WB, 95° OAT	18.0	70°F DB / 43° OAT	208/1/60	--	--	36"W x 10"D x 12"H	30	1 - 3

NOTES:
1. INDOOR UNIT POWERED BY OUTDOOR UNIT.
2. PROVIDE WITH ALL NECESSARY REFRIGERATION PIPING AND APPURTANCES.
3. WIRED UNIT CONTROLLER.
4. ALLDURA COATING FOR ENTIRE UNIT.

EXHAUST FAN SCHEDULE

ID	Location	Manufacturer	Model	CFM	S.P.	Fan Drive	Service	Motor HP	Weight (lbs)	Notes
EF-2	ROOF	GREENHECK	G-097-VG	770	0.5	DIRECT	115/1/60	1/4	80	1 - 2

NOTES:
1. MOUNT ON EXISTING ROOF CURB, PROVIDE CURB ADAPTER AS REQUIRED.
2. PROVIDE PERMATECTOR COATING.

MECHANICAL LEGEND

SYMBOLS	ABBREVIATIONS	
	ABC	ABOVE CEILING
	AFF	ABOVE FINISHED FLOOR
AD	AD	ACCESS DOOR
12/8	AL	ACOUSTIC LINED DUCT (DIM IS INTERNAL)
	AC	AIR CONDITIONING
	BHP	BRAKE HORSE POWER
	CFM	CUBIC FEET PER MINUTE
A 123 CFM		DIFFUSER TAG
— — — — —	(D)	DEMO
	DB	DRY BULB
12/8		DUCT (RECTANGULAR DUCT, DIMENSIONS IN INCHES)
12Ø		DUCT (ROUND DUCT, DIAMETER IN INCHES)
D		DUCT DROP IN DIRECTION OF ARROW
R		DUCT RISE IN DIRECTION OF ARROW
	EER	ENERGY EFFICIENCY RATIO
	EAT	ENTERING AIR TEMPERATURE
EA	EA	EXHAUST AIR DUCT
	EF	EXHAUST FAN
		EXHAUST GRILLE
	(E), EX	EXISTING
	ESP	EXTERNAL STATIC PRESSURE
	FPM	FEET PER MINUTE
		FLEXIBLE DUCT
	FLA	FULL LOAD AMPS
	LAT	LEAVING AIR TEMPERATURE
L		LOUVERED DOOR
	MOCP	MAXIMUM OVER CURRENT PROTECTION
	MCA	MINIMUM CIRCUIT AMPACITY
M		MOTORIZED DAMPER
	(N)	NEW
		NEW CONNECTION TO EXISTING
	OA	OUTSIDE AIR
1 123 CFM		REGISTER/GRILLE TAG
	(R), R	RELOCATE
		REMOVE TO THIS POINT
RA	RA	RETURN AIR DUCT
		RETURN GRILLE
	RL/RS	REFRIGERANT LINE SET
	SEER	SEASONAL ENERGY EFFICIENCY RATIO
SD	SD	SMOKE DETECTOR
SA	SA	SUPPLY AIR DUCT
		SUPPLY DIFFUSER
T	T'STAT	THERMOSTAT (48" AFF TOP OF BOX)
	TSP	TOTAL STATIC PRESSURE
		TURNING VANES
	TYP	TYPICAL
UC		UNDERCUT DOOR
	UG	UNDERGROUND
	VIF	VERIFY IN FIELD
		VOLUME DAMPER - MANUAL OPERATION
	WB	WET BULB

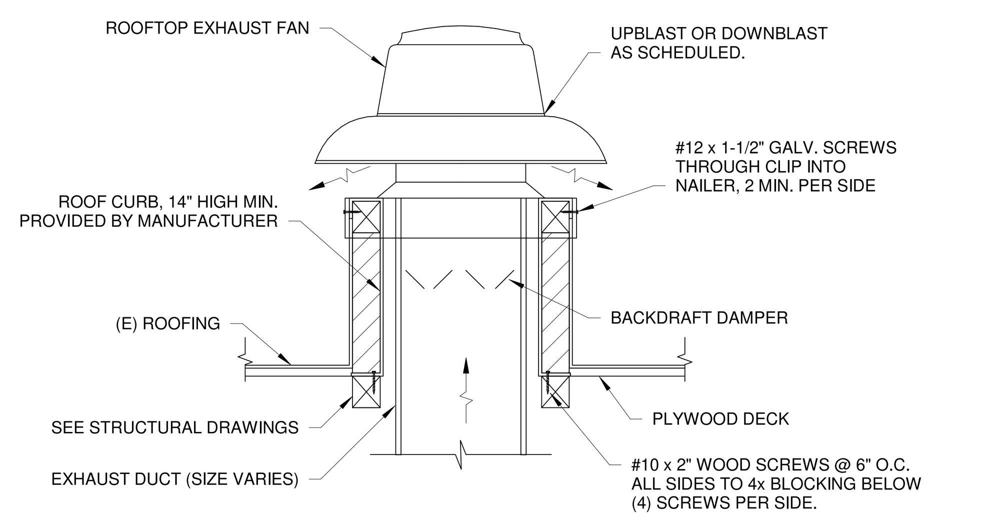

NOTES:
1. CURBS & FANS SHALL BE FROM THE SAME MANUFACTURER.
2. SEE ARCHITECTURAL DRAWINGS FOR ROOFING, INSULATION, AND FLASHING REQUIREMENTS.

2 M100 ROOF EXHAUST FAN DETAIL
NOT TO SCALE

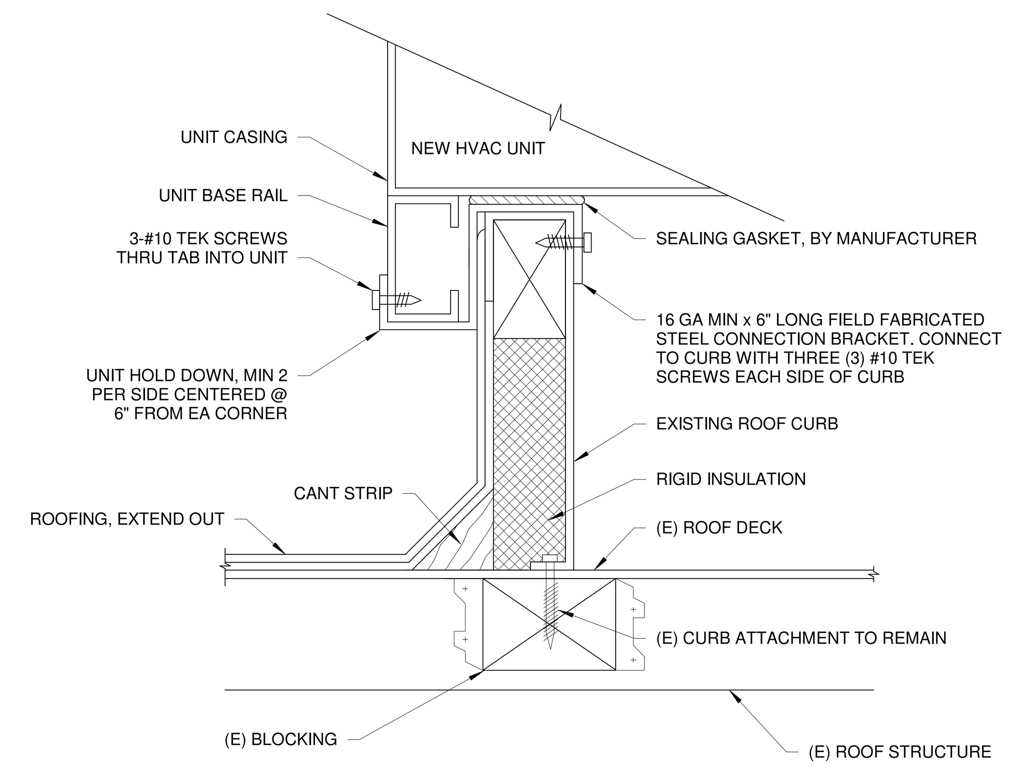

NOTES:

1. CONTRACTOR TO VERIFY EXISTING CONSTRUCTION AND NOTIFY ARCHITECT OF DISCREPANCIES BETWEEN EXISTING CONDITIONS AND DESIGN DRAWINGS.
2. CONTRACTOR SHALL ENSURE PROPER FLASHING AND WATER TIGHT SEALING ON EXISTING ROOF AND NEW ROOF CURB.
3. UNIT HOLD DOWNS, FABRICATED FROM 6" WIDE, 16 GA GALVANIZED STEEL EQUALLY SPACED ON LONG SIDES OF UNITS. EACH LONG SIDE SHALL HAVE TWO CONNECTION BRACKETS. EACH SHORT SIDE SHALL HAVE ONE CONNECTION BRACKET.
4. INSTALL CONNECTION BRACKETS PRIOR TO SETTING UNIT ON CURB.

1 M100 EQUIPMENT ROOF CURB DETAIL
NOT TO SCALE

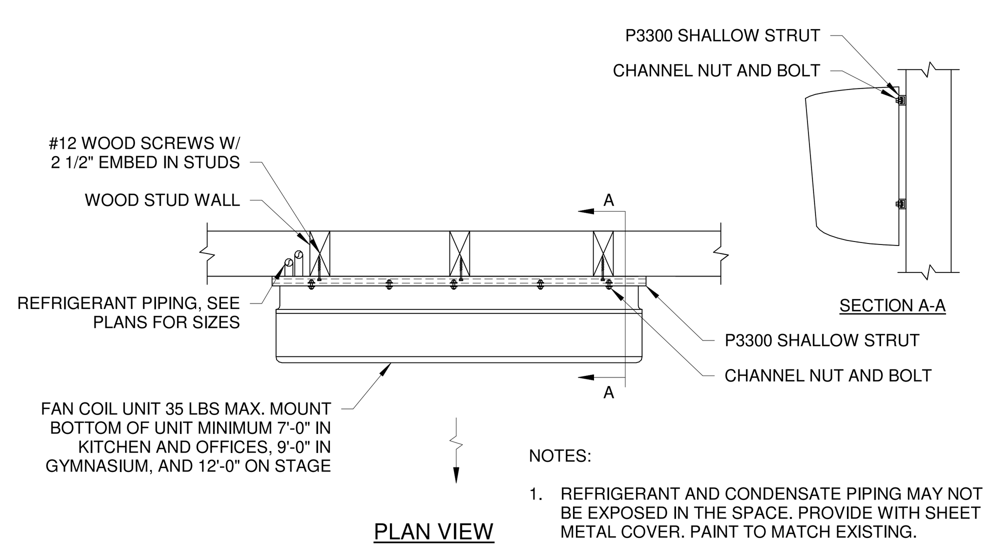

NOTES:

1. REFRIGERANT AND CONDENSATE PIPING MAY NOT BE EXPOSED IN THE SPACE. PROVIDE WITH SHEET METAL COVER. PAINT TO MATCH EXISTING.

5 M100 WALL MOUNTED FAN COIL DETAIL
NOT TO SCALE

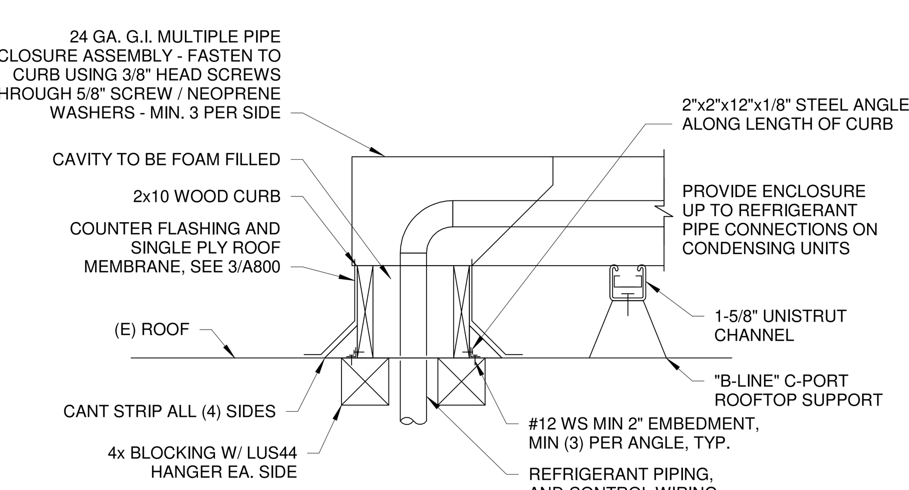

NOTES:
1. ALL PIPES ENTERING THE PIPE ENCLOSURE ASSEMBLY SHALL BE SLOPED UPWARD AS THEY ENTER THE FLASHING SO THAT WATER WILL NOT BE ABLE TO RUN INTO THE BUILDING.
2. CLEAN AND PRIME THE ENTIRE TIE-IN AREA.

4 M100 REFRIGERANT PIPING THRU ROOF DETAIL
NOT TO SCALE

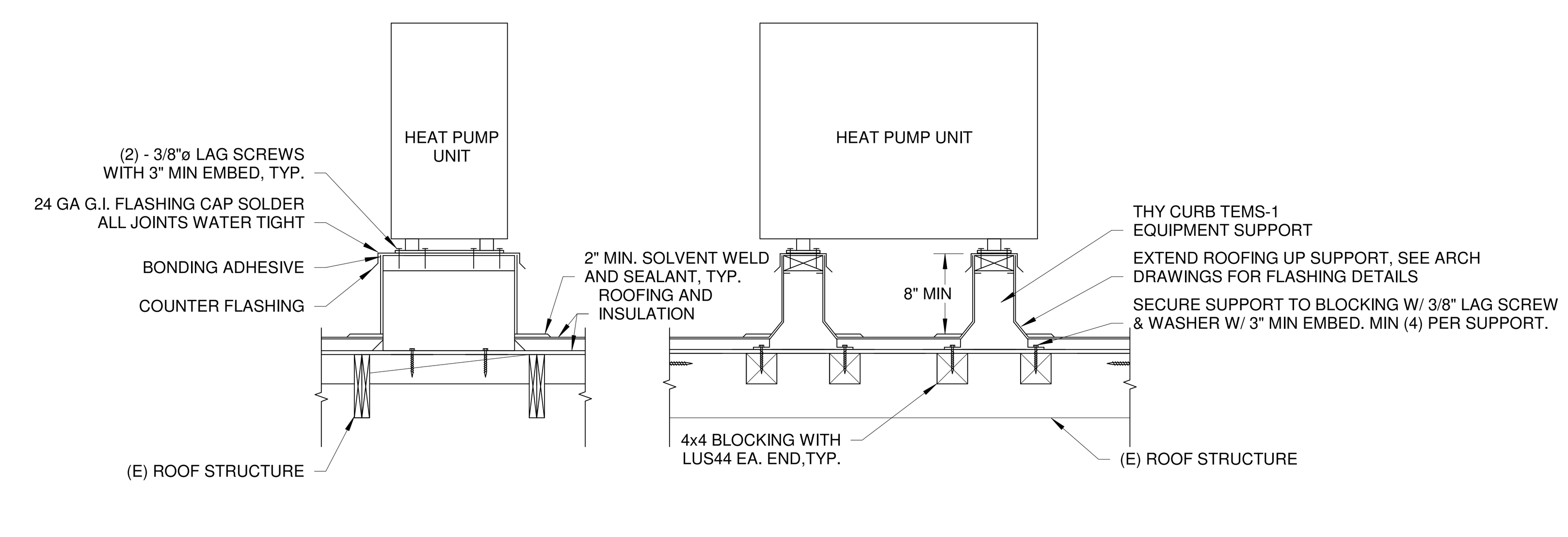

3 M100 MINI-SPLIT HEAT PUMP ON ROOF DETAIL
NOT TO SCALE

Copyright © 2025
All ideas, designs, arrangements and plans indicated or represented by this drawing are owned by, and the property of, NICHOLS, MELBURG and ROSSETTO and were created, evolved and developed for use on, and in conjunction with, the specified project. None of such ideas, designs, arrangements or plans shall be used by, or disclosed to any person, firm or corporation for any purpose whatsoever without the written permission of NICHOLS, MELBURG and ROSSETTO.

NICHOLS MELBURG & ROSSETTO
ARCHITECTS + ENGINEERS
300 KNOLLCREST DRIVE
REDDING, CA. 96002
(530) 222-3300 (530) 222-3538 FAX
http://www.nmrdesign.com

CONSULTANTS
FRONTIER
CONSULTING ENGINEERS
2727 Bechelli Lane - Redding, CA 96002
Ph: (530) 232-6160 - www.frontierce.com

LICENSE STAMPS

REGISTERED PROFESSIONAL ENGINEER
BEN R. ABRAHAMSEN
No. M35923
EXP. 3-31-2026
MECHANICAL
STATE OF CALIFORNIA

PROJECT NAME

RENOVATION FOR

Humboldt County Animal Shelter

980 Lycoming Ave
McKinleyville, CA 95519

SHEET TITLE

MECHANICAL LEGENDS AND SCHEDULES

DRAWING STATUS

CONSTRUCTION DOCUMENTS

REVISIONS

Sym.	Description	Date

Drawn By	EG
Date Issued	04-03-2026
Scale	1/8" = 1'-0"
Project No.	17-6430

SHEET No.

M100

KEYED NOTES:

1. REMOVE EXISTING WALL-MOUNT FAN COIL AND ALL ASSOCIATED REFRIGERANT PIPING AND CONTROLS. PREPARE FOR INSTALLATION OF NEW UNIT. REMOVE EXISTING THERMOSTAT.
2. REMOVE EXISTING REFRIGERANT PIPING ABOVE CEILING. EVACUATE REFRIGERANT CHARGE AND PROPERLY DISPOSE.
3. CONDUCT PRE-CONSTRUCTION AIR BALANCE TEST OF EXISTING SYSTEMS BY TESTING AIRFLOWS AT ALL DIFFUSERS AND GRILLES AND DOCUMENTING ALL CONDITIONS IN A PRE-CONSTRUCTION TAB REPORT FOR OWNER AND ENGINEER REVIEW.

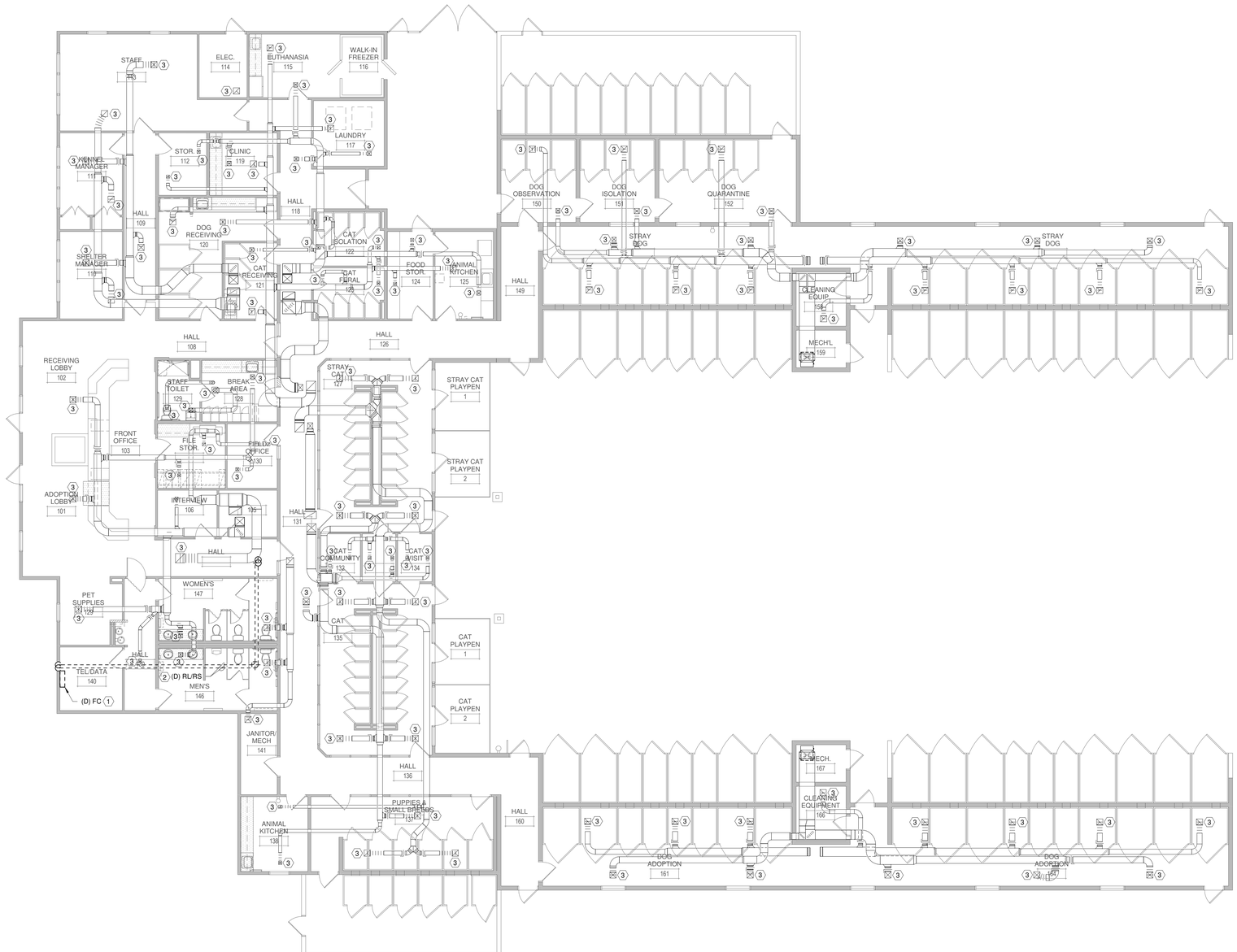

1 / M110 MECHANICAL DEMOLITION FLOOR PLAN
1/8" = 1'-0"

Copyright © 2025
All ideas, designs, arrangements and plans indicated or represented by this drawing are owned by, and the property of, NICHOLS, MELBURG and ROSSETTO and were created, evolved and developed for use on, and in conjunction with, the specified project. None of such ideas, designs, arrangements or plans shall be used by, or disclosed to any person, firm or corporation for any purpose whatsoever without the written permission of NICHOLS, MELBURG and ROSSETTO.

NICHOLS MELBURG & ROSSETTO
ARCHITECTS + ENGINEERS
300 KNOLLCREST DRIVE
REDDING, CA 96002
(530) 222-3300 (530) 222-3538 FAX
http://www.nmrdesign.com

CONSULTANTS

FRONTIER CONSULTING ENGINEERS
2727 Bechelli Lane · Redding, CA 96002
Ph: (530) 232-6160 · www.frontierce.com

LICENSE STAMPS

REGISTERED PROFESSIONAL ENGINEER
JOB E. ASHAUER
No. M35923
EXP. 3-31-2026
MEGHA NICOL
STATE OF CALIFORNIA

PROJECT NAME

RENOVATION FOR

Humboldt County Animal Shelter

980 Lycoming Ave
McKinleyville, CA 95519

SHEET TITLE

MECHANICAL DEMOLITION FLOOR PLAN

DRAWING STATUS

CONSTRUCTION DOCUMENTS

REVISIONS

Sym.	Description	Date

Drawn By	EG
Date Issued	04-03-2026
Scale	1/8" = 1'-0"
Project No.	17-6430

SHEET No.

M110

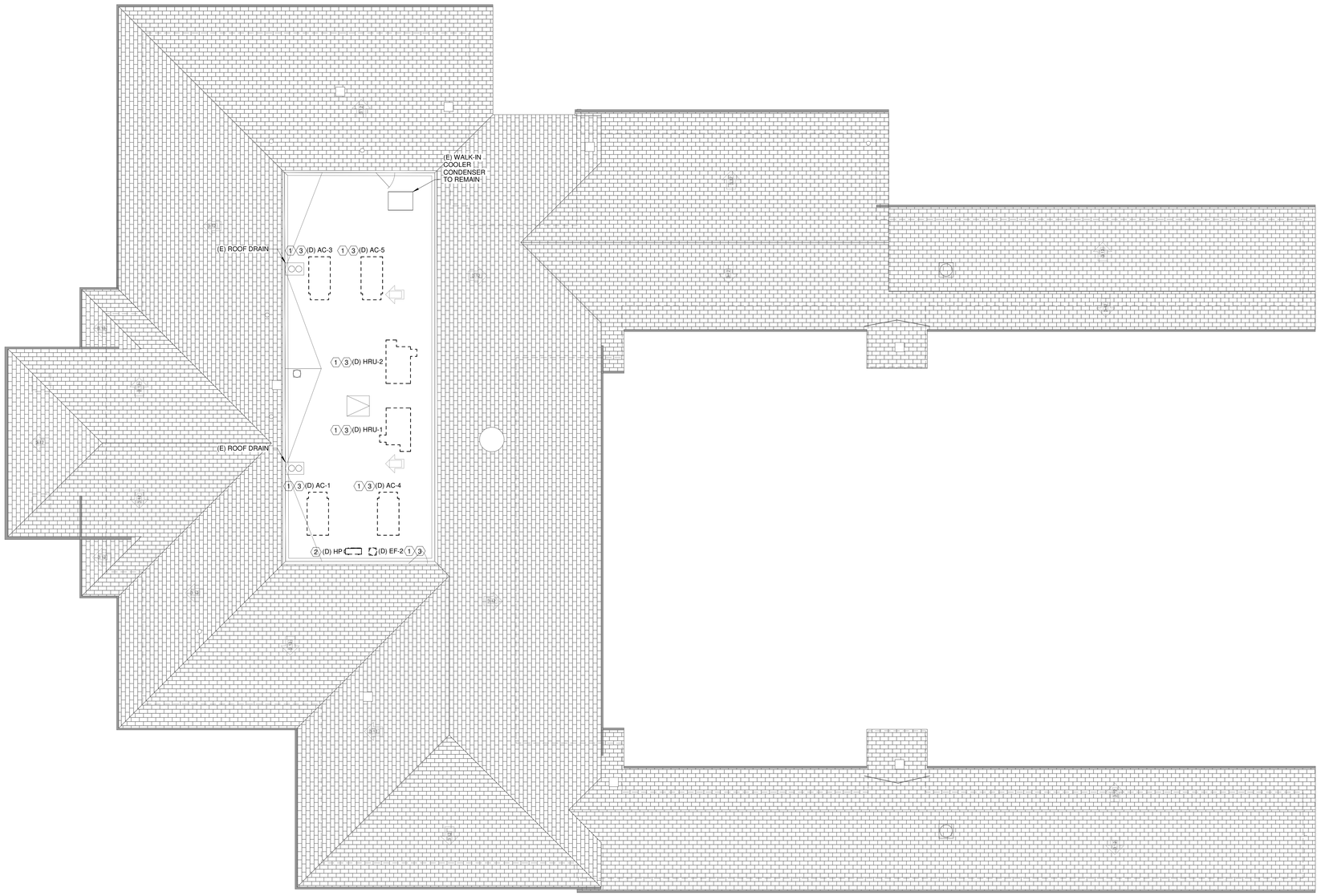

1 / M140 MECHANICAL DEMOLITION ROOF PLAN
1/8" = 1'-0"

N

KEYED NOTES:

1. REMOVE EXISTING HVAC UNIT. DISCONNECT GAS AND CONDENSATE PIPING. MODIFY EXISTING CURB AND DUCT DROPS AS REQUIRED FOR NEW UNIT INSTALLATION. SEE ELECTRICAL DRAWINGS FOR POWER MODIFICATIONS. DISCONNECT AND RECONNECT CONTROL WIRING.
2. REMOVE EXISTING MINI-SPLIT UNIT AND SUPPORTS. REMOVE EXISTING REFRIGERANT PIPING DOWN TO FAN COIL BELOW.
3. CONDUCT PRE-CONSTRUCTION AIR BALANCE TEST OF EXISTING SYSTEMS AS REQUIRED IN THE TAB SPECIFICATIONS, INCLUDING FAN RPM, MOTOR RPM, MOTOR AMPS, MOTOR VOLTAGE, BELT/SHEAVE SIZES, TOTAL AIRFLOW, OUTSIDE AIRFLOW, AND PRESSURE DROPS ACROSS THE INTERNAL COMPONENTS (FILTERS, COILS, HEAT EXCHANGER.)

Copyright © 2025

All ideas, designs, arrangements and plans indicated or represented by this drawing are owned by, and the property of, NICHOLS, MELBURG and ROSSETTO and were created, evolved and developed for use on, and in conjunction with, the specified project. None of such ideas, designs, arrangements or plans shall be used by, or disclosed to any person, firm or corporation for any purpose whatsoever without the written permission of NICHOLS, MELBURG and ROSSETTO.

NICHOLS MELBURG & ROSSETTO
ARCHITECTS + ENGINEERS
300 KNOLLCREST DRIVE
REDDING, CA. 96002
(530) 222-3300 (530) 222-3538 FAX
http://www.nmrdesign.com

CONSULTANTS

FRONTIER
CONSULTING ENGINEERS
2727 Bechelli Lane · Redding, CA 96002
Ph: (530) 232-6160 · www.frontierce.com

LICENSE STAMPS

REGISTERED PROFESSIONAL ENGINEER
JOB E. ABRAHAM
No. M35823
EXP. 3-31-2026
MECHA NICAL
STATE OF CALIFORNIA

PROJECT NAME

RENOVATION FOR

Humboldt County Animal Shelter

980 Lycoming Ave
McKinleyville, CA 95519

SHEET TITLE

MECHANICAL DEMOLITION ROOF PLAN

DRAWING STATUS

CONSTRUCTION DOCUMENTS

REVISIONS

Sym.	Description	Date

Drawn By	EG
Date Issued	04-03-2026
Scale	1/8" = 1'-0"
Project No.	17-6430

SHEET No.

M140

GENERAL NOTES:

1. PROVIDE CERTIFIED TEST AND BALANCE OF ALL EXISTING AND NEW HVAC SYSTEMS TO RESTORE SYSTEMS TO ORIGINAL DESIGN AIRFLOWS AS INDICATED ON THIS FLOOR PLAN.

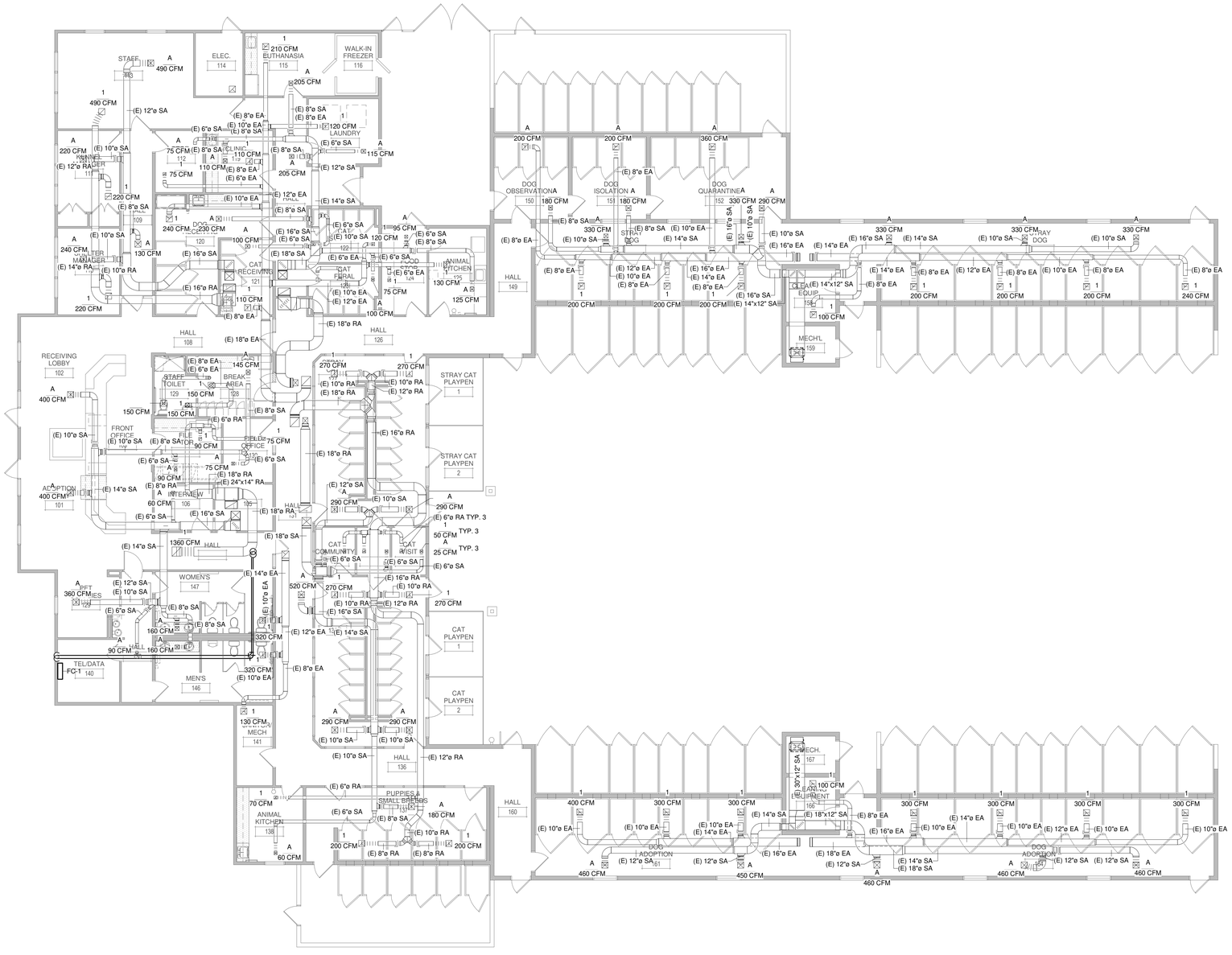

1 M210 MECHANICAL FLOOR PLAN

1/8" = 1'-0"

Copyright © 2025

All ideas, designs, arrangements and plans indicated or represented by this drawing are owned by, and the property of, NICHOLS, MELBURG and ROSSETTO and were created, evolved and developed for use on, and in conjunction with, the specified project. None of such ideas, designs, arrangements or plans shall be used by, or disclosed to any person, firm or corporation for any purpose whatsoever without the written permission of NICHOLS, MELBURG and ROSSETTO.

NICHOLS MELBURG & ROSSETTO
ARCHITECTS + ENGINEERS
300 KNOLLCREST DRIVE
REDDING, CA 96002
(530) 222-3300 (530) 222-3538 FAX
http://www.nmrdesign.com

CONSULTANTS

FRONTIER
CONSULTING ENGINEERS
2727 Bechelli Lane · Redding, CA 96002
Ph. (530) 232-6160 · www.frontierce.com

LICENSE STAMPS

REGISTERED PROFESSIONAL ENGINEER
MICHAEL E. NISHIMURA
No. M35923
EXP. 3-31-2026
MECHANICAL
STATE OF CALIFORNIA

PROJECT NAME

RENOVATION FOR

Humboldt County Animal Shelter

980 Lycoming Ave
McKinleyville, CA 95519

SHEET TITLE

MECHANICAL FLOOR PLAN

DRAWING STATUS

CONSTRUCTION DOCUMENTS

REVISIONS

Sym.	Description	Date

Drawn By	EG
Date Issued	04-03-2026
Scale	1/8" = 1'-0"
Project No.	17-6430

SHEET No.

M210

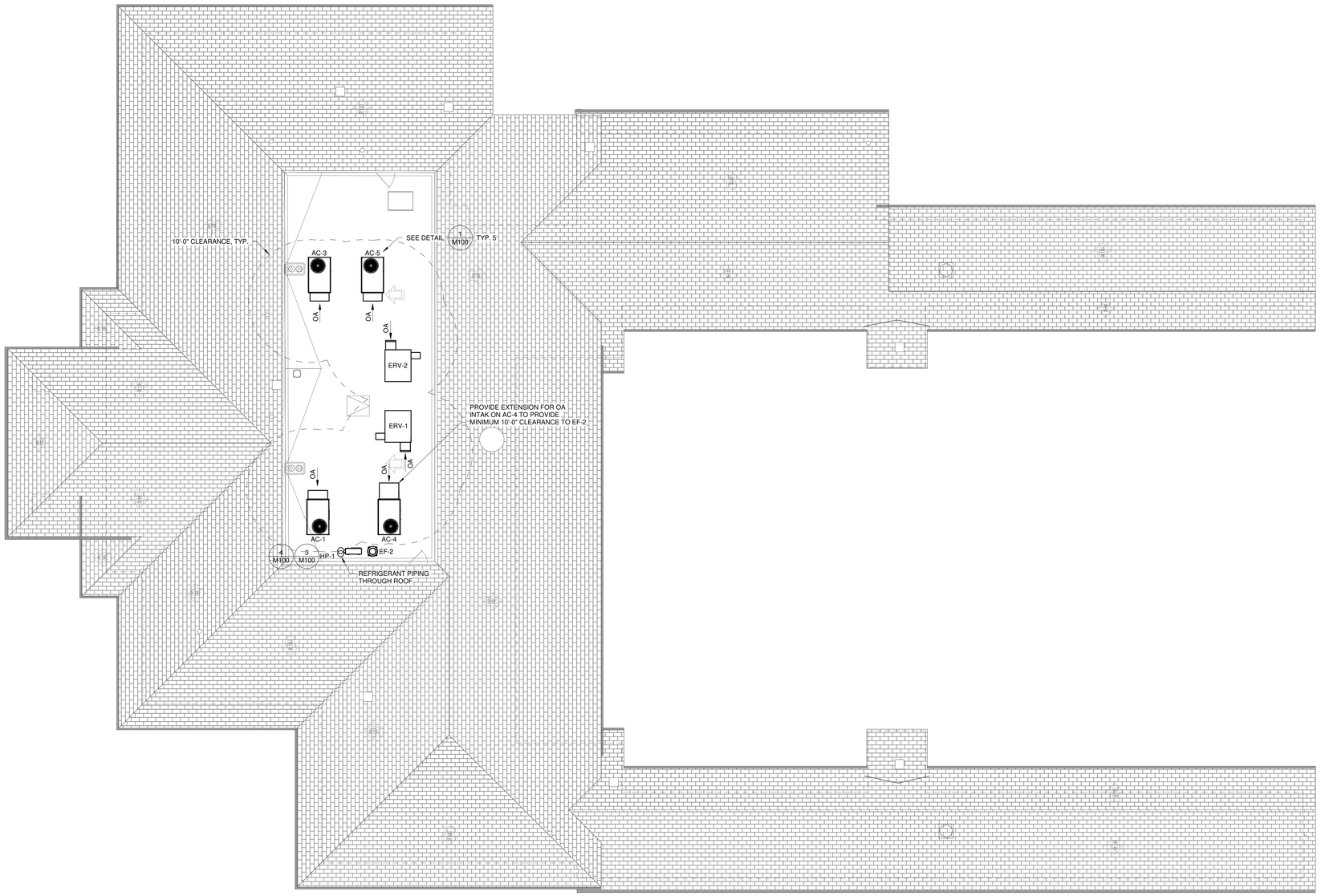

1 M240 MECHANICAL ROOF PLAN
1/8" = 1'-0"

Copyright © 2025

All ideas, designs, arrangements and plans indicated or represented by this drawing are owned by, and the property of, NICHOLS, MELBURG and ROSSETTO and were created, evolved and developed for use on, and in conjunction with, the specified project. None of such ideas, designs, arrangements or plans shall be used by, or disclosed to any person, firm or corporation for any purpose whatsoever without the written permission of NICHOLS, MELBURG and ROSSETTO.

NICHOLS MELBURG & ROSSETTO
ARCHITECTS + ENGINEERS
300 KNOLLCREST DRIVE
REDDING, CA 96002
(530) 222-3300 (530) 222-3538 FAX
http://www.nmrdesign.com

CONSULTANTS

FRONTIER
CONSULTING ENGINEERS
2727 Bechelli Lane · Redding, CA 96002
Ph: (530) 232-6160 · www.frontierce.com

LICENSE STAMPS

REGISTERED PROFESSIONAL ENGINEER
ROB E. KIRKLAND
No. M35823
EXP. 3-31-2026
MECHA NICAL
STATE OF CALIFORNIA

PROJECT NAME

RENOVATION FOR

Humboldt County Animal Shelter

980 Lycoming Ave
McKinleyville, CA 95519

SHEET TITLE

MECHANICAL ROOF PLAN

DRAWING STATUS

CONSTRUCTION DOCUMENTS

REVISIONS

Sym.	Description	Date

Drawn By	EG
Date Issued	04-03-2026
Scale	1/8" = 1'-0"
Project No.	17-6430

SHEET No.

M240

This document is used to demonstrate compliance for mechanical systems that are within the scope of the permit application and are demonstrating compliance using the prescriptive path outlined in 140.4, or 141.0(b)2 for alterations.

A. GENERAL INFORMATION

01	Project Location (city)	McKinleyville	04	Total Conditioned Floor Area	13500
02	Climate Zone	1	05	Total Unconditioned Floor Area	0
03	Occupancy Types Within Project:		06	# of Stories (Habitable Above Grade)	1

• All Other Occupancies

B. PROJECT SCOPE

This table Includes mechanical systems or components that are within the scope of the permit application and are demonstrating compliance using the prescriptive path outlined in 140.4, 170.2(b) or 141.0(b)2 and 180.2(b)2 for alterations.

01	02	03
Air System(s)	Wet System Components	Dry System Components
☒ Heating Air System	☐ Water Economizer	☐ Air Economizer
☒ Cooling Air System	☐ Pumps	☐ Electric Resistance Heat
Mechanical Controls	☐ System Piping	☒ Fan Systems
☒ Mechanical Controls (existing to remain, altered or new)	☐ Cooling Towers	☒ Ductwork (existing to remain, altered or new)
	☐ Chillers	☒ Ventilation
	☐ Boilers	☐ Zonal Systems/ Terminal Boxes

C. COMPLIANCE RESULTS

Table C will indicate if the project data input into the compliance document is compliant with mechanical requirements. This table is not editable by the user. If this table says "DOES NOT COMPLY" or "COMPLIES with Exceptional Conditions" refer to Table D., or the table indicated as not compliant for guidance.

01		02		03		04		05		06		07		08	09
System Summary 110.1, 110.2, 140.4, 170.2(c)	AND	Pumps 140.4(k), 170.2(c)4I	AND	Fans/ Economizers 140.4(c), 140.4(e), 170.2(c)	AND	System Controls 110.2, 120.2, 140.4(f), 170.2(c)	AND	Ventilation 120.1, 160.2	AND	Terminal Box Controls 140.4(d), 170.2(c)4B	AND	Distribution 120.3, 140.4(l), 160.2, 160.3	AND	Cooling Towers 110.2(e)2	Compliance Results
(See Table F)		(See Table G)		(See Table H)		(See Table I)		(See Table J)		(See Table K)		(See Table L)		(See Table M)	
Yes	AND		AND	Yes	AND	Yes	AND	Yes	AND		AND	Yes	AND		COMPLIES
Mandatory Measures Compliance (See Table Q for Details)											COMPLIES				

D. EXCEPTIONAL CONDITIONS

This table is auto-filled with uneditable comments because of selections made or data entered in tables throughout the form.

E. ADDITIONAL REMARKS

This table includes remarks made by the permit applicant to the Authority Having Jurisdiction.

F. HVAC SYSTEM SUMMARY (DRY & WET SYSTEMS)

Space Conditioning System Information

01	02	03	04	05	06
System Name	Quantity	System Serving	System Status	Space Type	Utilizing Recovered Heat
AC-1/AC-4	2	Single zone	New/ Addition	All Other Occupancies	☐
AC-3/AC-5	2	Single zone	New/ Addition	All Other Occupancies	☐
HP-1	1	Single zone	New/ Addition	Office	☐

F. HVAC SYSTEM SUMMARY (DRY & WET SYSTEMS)

Dry System Equipment Sizing (includes air conditioners, condensers, heat pumps, VRF, furnaces and unit heaters and DOAS systems)

01	02	03	04	05	06	07	08	09	10	11
				Equipment Sizing per Mechanical Schedule (kBtu/h) 140.4(a&b), 170.2(c)1 & 170.2(c)2						
				Heating Output [2,3]			Cooling Output [2,3]		Load Calculations [3,4]	
Name or Item Tag	Equipment Category per Tables 110.2, 140.4(a)2 and 170.2(c)3aii	Equipment Type per Tables 110.2 and Title 20	Smallest Size Available [1] 140.4(a) and 170.2(c)1	Per Design (kBtu/h)	Rated (kBtu/h)	Supp. Heating Output (kBtu/h)	Sensible Per Design (kBtu/h)	Rated (kBtu/h)	Total Heating Load (kBtu/h)	Total Sensible Cooling Load (kBtu/h)
AC-1/AC-4	Furnace + AC	AC, air cooled, single pkg + weatherized gas central furnace with single phase supply	NA: Altered per 141.0(b)2E and 180.2(b)2	60	64.8	0	60	59.56	60	60
AC-3/AC-5	Furnace + AC	AC, air cooled, single pkg + weatherized gas central furnace with single phase supply	NA: Altered per 141.0(b)2E and 180.2(b)2	60	64.8	0	36	37.81	60	36
HP-1	Unitary Heat Pumps	Air-cooled, split (1phase)	NA: Altered per 141.0(b)2E and 180.2(b)2	20	20	0	12	12	20	12

[1]FOOTNOTES: Equipment shall be the smallest size, within the available options of the desired equipment line, necessary to meet the design heating and cooling loads of the building per 140.4(a) and 170.2(c)1. Healthcare facilities are excepted.
[2]It is common practice to show rated output capacity on the equipment schedule. Sensible cooling output comes from specification sheet tables.
[3] If equipment is heating only, leave cooling output and load blank. If equipment is cooling only, leave heating output and load blank.
[4] Authority Having Jurisdiction may ask for load calculations used for compliance per 140.4(b) and 170.2(c).

F. HVAC SYSTEM SUMMARY (DRY & WET SYSTEMS)

Dry System Equipment Efficiency (other than Package Terminal Air Conditioners (PTAC) and Package Terminal Heat Pumps (PTHP), DX-DOAS and Dual Fuel Heat Pumps)

01	02	03	04	05	06	07	08	09
		Heating Mode				Cooling Mode		
Name or Item Tag	Size Category (Btu/h)	Rating Condition (°F)	Efficiency Unit	Minimum Efficiency Required per Tables 110.2 / Title 20	Design Efficiency	Efficiency Unit	Minimum Efficiency Required per Tables 110.2 / Title 20	Design Efficiency
AC-1/AC-4	<65kBtuh cooling/ <225kBtuh heating		AFUE	0.81	0.81	EER2 SEER2	10.6 13.4	11 13.4
AC-3/AC-5	<65kBtuh cooling/ <225kBtuh heating		AFUE	0.81	0.81	EER2 SEER2	10.6 13.4	11 13.4
HP-1	<65,000		HSPF2	7.5	10.1	SEER2	14.3	21.1

G. PUMPS

This section does not apply to this project.

H. FAN SYSTEMS & AIR ECONOMIZERS

This table is used to demonstrate compliance with prescriptive requirements found in 140.4(c), 140.4(e), 140.4(m), 170.2(c)3, and 170.2(c)4A for fan systems. Fan systems serving only process loads are exempt from these requirements and do not need to be included in Table H.

System Name	AC-1/AC-4	Quantity	2	Fan System Status	New	System Zoning	all other systems	Serving Dwelling Units	Not Serving Dwelling Units	Fan System Airflow (cfm)	1,995	Site Elevation	141	Economizer	Fixed Enthalpy

01	02	03	04	05	06	07	08	09	10	11
						Allowance		Design		
Fan Name or Item Tag	Fan Type	Qty	Component	Airflow through Component (%)	Water Gauge (w.g)	Component Allowance (watt/cfm)	Fan Allowance (watt/cfm)[3]	Design Electrical Input Power Method	Motor Nameplate Horsepower	Fan Electrical Input Power (kW)
AC-1/AC-4	Supply	2	Hydronic/DX cooling coil or heat pump coil	100		0.139	0.336	Manufacturer provided		0.6
			Gas heat	100		0.058				
			MERV 13-16 Filter upstream of thermal conditioning equipment	100		0.139				

Supply Fan Base Allowance (watt/cfm)	0.232	Exhaust/Return/Relief/Transfer Fan Base Allowance(watt/cfm)	0	Fan System Allowance (kW)[3]	1.8	Fan System Electrical Input Power (kW)	1.2

H. FAN SYSTEMS & AIR ECONOMIZERS

System Name	AC-3/AC-5	Quantity	2	Fan System Status	New	System Zoning	all other systems	Serving Dwelling Units	Not Serving Dwelling Units	Fan System Airflow (cfm)	1,440	Site Elevation	141	Economizer	Fixed Enthalpy

01	02	03	04	05	06	07	08	09	10	11
						Allowance		Design		
Fan Name or Item Tag	Fan Type	Qty	Component	Airflow through Component (%)	Water Gauge (w.g)	Component Allowance (watt/cfm)	Fan Allowance (watt/cfm)[3]	Design Electrical Input Power Method	Motor Nameplate Horsepower	Fan Electrical Input Power (kW)
AC-3/AC-5	Supply	2	Hydronic/DX cooling coil or heat pump coil	100		0.139	0.336	Manufacturer provided		0.3
			Gas heat	100		0.058				
			MERV 13-16 Filter upstream of thermal conditioning equipment	100		0.139				

Supply Fan Base Allowance (watt/cfm)		Exhaust/Return/Relief/Transfer Fan Base Allowance(watt/cfm)		Fan System Allowance (kW)[3]		Fan System Electrical Input Power (kW)	0.6

[1] FOOTNOTES: Fans serving spaces with design background noise goals below NC35
[2] Low-turndown single-zone VAV fan system must be capable of and configured to reduce airflow to 50 percent of design airflow and use no more than 30 percent of the design wattage at that airflow. No more than 10 percent of the design load served by the equipment shall have fixed loads.
[3] Fan system allowance includes fan system base allowance.
[4] Filter pressure loss can only be counted once per fan system.
[5] Complex Fan System means a fan system that combines a single cabinet fan system with other supply fans, exhaust fans, or both.
[6] Computer room economizers must meet requirements of 140.9(a) and will be documented on the NRCC-PRC-E document..

H. EXHAUST AIR HEAT RECOVERY 140.4(q), 170.2(c)4O

01	02	03	04	05	06	07	08	09	10	11

H. EXHAUST AIR HEAT RECOVERY 140.4(q), 170.2(c)4O

Fan System Name	Qty	Hours of Operation per Year	Design Supply Airflow Rate	Outdoor Airflow	% Outdoor Air at Full Design Airflow	Exemptions to Exhaust Air Heat Recovery Requirement per 140.4(q) & 170.2(c)4O	Exhaust Air Heat Recovery 140.4(q) & 170.2(c)4O	Type Of Heat Recovery Rating	Required Recovery Ratio	Energy Recovery Bypass
AC-1/AC-4	2	< 8,000	1,995	350	18	NA: CZ 1 exempt from cooling recovery ratio	Required for heating design conditions			
AC-3/AC-5	2	< 8,000	1,440	150	10	NA: CZ 1 exempt from cooling recovery ratio	Required for heating design conditions			

Fan Energy Index (FEI)

01	02	03
Name or Item Tag	FEI Exception	FEI
AC-1/AC-4	<1.00 HP or 0.89 kW	
AC-3/AC-5	<1.00 HP or 0.89 kW	

I. SYSTEM CONTROLS

This table is used to demonstrate compliance with mandatory controls in 110.2 and 120.2 and prescriptive controls in 140.4(f) and (n), 170.2(c)4D 170.2(c)4L or requirements in 141.0(b)2E 180.2(b)2 for altered space conditioning systems.

01	02	03	04	05	06	07	08	09	10
System Name	System Zoning	Conditioned Floor Area Being Served (ft²)	Thermostats 110.2(b) & (c)[1], 120.2(a) 160.3(a)2A or 141.0(b)2E & 180.2(b)2	Shut-Off Controls 120.2(e) & 160.3(a)2D	Isolation Zone Controls 120.2(g) & 160.3(a)2F	Demand Response 110.12 120.2(b) & 160.3(a)2B	Supply Air Temp. Reset 140.4(f) & 170.2(c)4D	Window Interlocks per 140.4(n) & 170.2(c)4D	Direct Digital Control (DDC) per 120.2
AC	Single zone	NA: Altered per 141.0(b)2E	Setback	Auto Timer Switch	NA: Single Zone	DR Tstat per 110.12	NA: Alteration	NA: Alteration Project	NA: Single Zone

[1]FOOTNOTES: Gravity gas wall heaters, gravity floor heaters, gravity room heaters, non-central electric heaters, fireplaces or decorative gas appliances, wood stoves are not required to have setback thermostats.

J. VENTILATION AND INDOOR AIR QUALITY

This table is used to demonstrate compliance with mandatory ventilation requirements in 120.1 120.2(e)3B 140.4(p) and 140.4(q) for all nonresidential and hotel/motel and d:t24refnolink/]160.2, 160.3(a)3D, 170.2(a)4N, 170.2(a)4O for high-rise residential occupancies. For alterations, only ventilation systems being altered within the scope of the permit application need to be documented in this table. In lieu of this table, the required outdoor ventilation rates and airflows may be shown on the plans or the calculations can be presented in a spreadsheet.

01	☐	Check the box if the project is showing ventilation calculations on the plans, or attaching the calculations instead of completing this table.
02	☒	Check this box if the project included Nonresidential, Hotel/Motel Spaces or Multifamily Common Use Spaces
	☐	
03	☐	Check the box if the project is using natural ventilation in any nonresidential or hotel/motel spaces to meet required ventilation rates per 120.1(c)2.

Nonresidential and Hotel/ Motel Multifamily Common Use Ventilation Systems

04		05		06		07
System Name	AC-1	System Design OA CFM Airflow[1]	350	System Design Transfer Air CFM	0	Air Filtration per 120.1(c) 141.0(b)2 and 160.2(c)21 [2]: Provided
08	09	10 / 11	12	13 / 14	15	16

J. VENTILATION AND INDOOR AIR QUALITY

Space Name or Item Tag	Occupancy Type[4]	Conditioned Floor Area (ft²)	# of Shower heads/ toilets	# of people [5]	Required Min OA CFM	Required Min CFM	Provided per Design CFM	DCV or Sensor Controls per 120.1(d)3, 120.1(d)5, and 120.1(e)3[6] 160.2(c)5D 160.2(c)5E 160.2(c)5D	
	Mechanical Ventilation Required per 120.1(c)3[3] & 160.2(c)3					Exh. Vent per 120.1(c)4 & 160.2(c)4			
Front Offices	Office space	2400		6	90			DCV	NA: Not required per §120.1(d)3
								Occ Sensor	NA: Alteration
17	Total System Required Min OA CFM				90	18	Ventilation for this System Complies?		Yes

04		05		06		07
System Name	AC-3	System Design OA CFM Airflow[1]	150	System Design Transfer Air CFM	0	Air Filtration per 120.1(c) 141.0(b)2 and 160.2(c)21 [2]: Provided
08	09	10 / 11	12	13 / 14	15	16

Space Name or Item Tag	Occupancy Type[4]	Conditioned Floor Area (ft²)	# of Shower heads/ toilets	# of people [5]	Required Min OA CFM	Required Min CFM	Provided per Design CFM	DCV or Sensor Controls per 120.1(d)3, 120.1(d)5, and 120.1(e)3[6] 160.2(c)5D 160.2(c)5E 160.2(c)5D	
	Mechanical Ventilation Required per 120.1(c)3[3] & 160.2(c)3					Exh. Vent per 120.1(c)4 & 160.2(c)4			
Manager Offices	Office space	850		6	90			DCV	NA: Not required per §120.1(d)3
								Occ Sensor	NA: Alteration
17	Total System Required Min OA CFM				90	18	Ventilation for this System Complies?		Yes

04		05		06		07
System Name	AC-4/ERV-1	System Design OA CFM Airflow[1]	1595	System Design Transfer Air CFM	0	Air Filtration per 120.1(c) 141.0(b)2 and 160.2(c)21 [2]: Provided
08	09	10 / 11	12	13 / 14	15	16

J. VENTILATION AND INDOOR AIR QUALITY

Space Name or Item Tag	Occupancy Type[4]	Conditioned Floor Area (ft²)	# of Shower heads/ toilets	# of people [5]	Required Min OA CFM	Required Min CFM	Provided per Design CFM	DCV or Sensor Controls per 120.1(d)3, 120.1(d)5, and 120.1(e)3[6] 160.2(c)5D 160.2(c)5E 160.2(c)5D	
	Mechanical Ventilation Required per 120.1(c)3[3] & 160.2(c)3					Exh. Vent per 120.1(c)4 & 160.2(c)4			
Cat Housing	All others	2200		10	150			DCV	NA: Not required per §120.1(d)3
								Occ Sensor	NA: Alteration
17	Total System Required Min OA CFM				150	18	Ventilation for this System Complies?		Yes

04		05		06		07
System Name	AC-5/ERV-2	System Design OA CFM Airflow[1]	1840	System Design Transfer Air CFM	0	Air Filtration per 120.1(c) 141.0(b)2 and 160.2(c)21 [2]: Provided
08	09	10 / 11	12	13 / 14	15	16

Space Name or Item Tag	Occupancy Type[4]	Conditioned Floor Area (ft²)	# of Shower heads/ toilets	# of people [5]	Required Min OA CFM	Required Min CFM	Provided per Design CFM	DCV or Sensor Controls per 120.1(d)3, 120.1(d)5, and 120.1(e)3[6] 160.2(c)5D 160.2(c)5E 160.2(c)5D	
	Mechanical Ventilation Required per 120.1(c)3[3] & 160.2(c)3					Exh. Vent per 120.1(c)4 & 160.2(c)4			
Animal Receiving	All others	2000		6	90			DCV	NA: Not required per §120.1(d)3
								Occ Sensor	NA: Alteration
17	Total System Required Min OA CFM				90	18	Ventilation for this System Complies?		Yes

[1] FOOTNOTES: System CFM should include both mechanical and natural ventilation for the zone/system
[2] Air filtration requirements apply to the following three system types per 120.1(c)1A: space conditioning systems utilizing ducts to supply air to occupiable space; supply-only ventilation systems providing outside air to occupiable space; supply side of balanced ventilation systems including heat recovery and energy recovery ventilation systems providing outside air to occupiable space.
[3] Uniform Mechanical Code may have more stringent ventilation requirements; the most stringent code requirement takes precedence.
[4] See Standards Tables 120.1-A and 120.1-B.
[5] For lecture halls with fixed seating, the expected number of occupants shall be determined in accordance with the California Building Code.

J. VENTILATION AND INDOOR AIR QUALITY

[6]120.2(e)3 requires systems serving rooms that are required by 130.1(c) to have lighting occupancy sensing controls to also have occupancy sensing zone controls for ventilation. Examples of spaces which require lighting occupancy sensors include offices 250ft² or smaller, multipurpose rooms less than 1,000 ft², classrooms, conference rooms, restrooms, aisles and open areas in warehouses, library book stack aisles, corridors, stairwells, parking garages, and loading and unloading zones, unless excepted by 130.1(c).

K. TERMINAL BOX CONTROLS

This section does not apply to this project.

L. DISTRIBUTION (DUCTWORK and PIPING)

This table is used to show compliance with mandatory pipe insulation requirements found in 120.3 and mandatory requirements found in 120.4(g) for duct sealing.

01	☐	Insulation shall be protected from damage, including that due to sunlight, moisture, equipment maintenance, and wind. Insulation exposed to weather shall be installed with a cover suitable for outdoor service. Insulation covering chilled water piping and refrigerant suction piping located outside the conditioned space shall have a Class I or Class II vapor retarder. All penetrations and joints of which shall be sealed.

Duct Leakage Testing

The answers to the questions below apply to the following duct systems:	M210	**NR/ Common Use:** Duct leakage testing shall not exceed 15% per NA7.5.3 required for these systems?	No

L. DISTRIBUTION (DUCTWORK and PIPING)

		Dwelling Units: Total duct leakage of duct system shall not exceed 15% or duct system to outside shall not exceed 10% per RA3.1.4 required for systems?	---
		Duct leakage testing per CMC Section 603.9.2 required for these systems?	No
11	No	The scope of the project includes only duct systems serving healthcare facilities	
12	Yes	Duct system provides conditioned air to an occupiable space for a constant volume, single zone, space-conditioning system.	
13	No	The space conditioning system serves less than 5,000 ft² of conditioned floor area.	
14	No	The combined surface area of the ducts is more than 25% of the total surface area of the entire duct system:	
15	No	The scope of the project includes extending an existing duct system, which is constructed, insulated or sealed with asbestos.	
16	Yes	The scope of the project includes an existing duct system that is documented to have been previously sealed as confirmed through field verification and diagnostic testing in accordance with procedures in the Reference Nonresidential Appendix NA2.	
17	Yes	All Ductwork and plenums with pressure class ratings shall be constructed to Seal Class A	
18	Yes	All ductwork is an extension of an existing duct system	
19	No	Ductwork serving individual dwelling unit	
20	Yes	< 25 ft of new or replacement space conditioning ducts installed in multifamily occupancy	
21	R-8	Duct Insulation R-value	
22	Yes	Ductwork Existing To Remain	
23	Yes	Duct System Connected To Altered Space Conditioning System	

M. COOLING TOWERS

This section does not apply to this project.

N. DECLARATION OF REQUIRED CERTIFICATES OF INSTALLATION

Selections have been made based on information provided in previous tables of this document. If any selection needs to be changed, please explain why in Table E Additional Remarks. These documents must be provided to the building inspector during construction and can be found online at https://www.energy.ca.gov/programs-and-topics/programs/building-energy-efficiency-standards/2022-building-energy-efficiency-4

Form/Title
NRCI-MCH-01-E - Must be submitted for all buildings

O. DECLARATION OF REQUIRED CERTIFICATES OF ACCEPTANCE

Selections have been made based on information provided in previous tables of this document. If any selection needs to be changed, please explain why in Table E Additional Remarks. These documents must be provided to the building inspector during construction and can be found online at https://www.energy.ca.gov/programs-and-topics/programs/building-energy-efficiency-standards/2022-building-energy-efficiency-4

Form/Title	Systems/Spaces To Be Field Verified
NRCA-MCH-02-A - Outdoor Air must be submitted for all newly installed HVAC units. Note: MCH-02-A can be performed in conjunction with MCH-07-A Supply Fan VFD Acceptance (if applicable) since testing activities overlap.	AC-1; AC-3; AC-4/ERV-1; AC-5/ERV-2
NRCA-MCH-03-A - Constant Volume Single Zone HVAC NOTE: This form does not automatically move to "Yes'. If Constant Volume Single Zone HVAC Systems are included in the scope, permit applicant should move this form to "Yes".	AC
NRCA-MCH-05-A - Air Economizer Controls	AC-1/AC-4; AC-3/AC-5
NRCA-MCH-13-A Automatic FDD for Air Handling Units and Zone Terminal Units Acceptance	AC-1/AC-4; AC-3/AC-5; HP-1

P. DECLARATION OF REQUIRED CERTIFICATES OF VERIFICATION

There are no NRCV forms required for this project.

Q. MANDATORY MEASURES DOCUMENTATION LOCATION

This table is used to indicate where mandatory measures are documented in the plan set or construction documentation.

01		02
Compliance with Mandatory Measures documented through MCH Mandatory Measures Note Block	Yes	Plan sheet or construction document location: M100

DOCUMENTATION AUTHOR'S DECLARATION STATEMENT

I certify that this Certificate of Compliance documentation is accurate and complete.

Documentation Author Name: Elijah Tubbs	Documentation Author Signature: [signature]
Company: Frontier Consulting Engineers	Signature Date: 2025-12-19
Address: 2727 Bechelli Ln	CEA/ HERS Certification Identification (if applicable):
City/State/Zip: Redding, CA 95965	Phone: (530) 232.6160

RESPONSIBLE PERSON'S DECLARATION STATEMENT

I certify the following under penalty of perjury, under the laws of the State of California:

1. The information provided on this Certificate of Compliance is true and correct.
2. I am eligible under Division 3 of the Business and Professions Code to accept responsibility for the building design or system design identified on this Certificate of Compliance (responsible designer)
3. The energy features and performance specifications, materials, components, and manufactured devices for the building design or system design identified on this Certificate of Compliance conform to the requirements of Title 24, Part 1 and Part 6 of the California Code of Regulations.
4. The building design features or system design features identified on this Certificate of Compliance are consistent with the information provided on other applicable compliance documents, worksheets, calculations, plans and specifications submitted to the enforcement agency for approval with this building permit application.
5. I will ensure that a completed signed copy of this Certificate of Compliance shall be made available with the building permit(s) issued for the building, and made available to the enforcement agency for all applicable inspections. I understand that a completed signed copy of this Certificate of Compliance is required to be included with the documentation the builder provides to the building owner at occupancy.

Responsible Designer Name: Ben Abrahamsen	Responsible Designer Signature: [signature]
Company: Frontier Consulting Engineers	Date Signed: 2025-12-19
Address: 2727 Bechelli Ln	License: M35923
City/State/Zip: Redding, CA 95965	Phone: (530) 232.6160

Copyright © 2025
All ideas, designs, arrangements and plans indicated or represented by this drawing are owned by, and the property of, NICHOLS, MELBURG and ROSSETTO and were created, evolved and developed for use on, and in conjunction with, the specified project. None of such ideas, designs, arrangements or plans shall be used by, or disclosed to any person, firm or corporation for any purpose whatsoever without the written permission of NICHOLS, MELBURG and ROSSETTO.

NICHOLS MELBURG ROSSETTO
ARCHITECTS + ENGINEERS
300 KNOLLCREST DRIVE
REDDING, CA. 96002
(530) 222-3300 (530) 222-3538 FAX
http://www.nmrdesign.com

CONSULTANTS

FRONTIER
CONSULTING ENGINEERS
2727 Bechelli Lane - Redding, CA 96002
Ph: (530) 232-6160 - www.frontierce.com

LICENSE STAMPS

REGISTERED PROFESSIONAL ENGINEER — NATHANIEL J. WARNER — No. E25042 — EXP. 06-30-2026 — ELECTRICAL — STATE OF CALIFORNIA

PROJECT NAME

RENOVATION FOR

Humboldt County Animal Shelter

980 Lycoming Ave
McKinleyville, CA 95519

SHEET TITLE

PRESCRIPTIVE T24 CALCULATIONS

DRAWING STATUS

CONSTRUCTION DOCUMENTS

REVISIONS

Sym.	Description	Date

Drawn By	Author
Date Issued	04-03-2026
Scale	
Project No.	17-6430

SHEET No.

M400

PLUMBING LEGEND

SYMBOLS	ABBREVIATIONS	
	ABC	ABOVE CEILING
	BFP	BACKFLOW PREVENTER
		BALL VALVE
	BG	BELOW GRADE
	BS	BELOW SLAB
		CHECK VALVE
	CW	COLD WATER SUPPLY
	CD	CONDENSATE DRAIN
	CDO	CONDENSATE DRAIN OVERFLOW
		CONNECTION TO BOTTOM OF PIPE
		CONNECTION TO TOP OF PIPE
	(D)	DEMO
		DOMESTIC COLD WATER
		DOMESTIC HOT WATER
	DN	DOWN
	DIW	DOWN IN WALL
	(E), EX	EXISTING
		FLANGE
	FCO	FLOOR CLEAN OUT
	FD	FLOOR DRAIN
	FS	FLOOR SINK
	GSM	GALVANIZED SHEET METAL
	GCO	GRADE CLEAN OUT
	GW	GREASE WASTE
	HB	HOSE BIB
	HW	HOT WATER SUPPLY
	HWR	HOT WATER RECIRC
	(N)	NEW
		NEW CONNECTION TO EXISTING
	OH	OVERHEAD
		PIPE CAP
		PIPE TURNED DOWN
		PIPE TURNED UP
		PRESSURE GAUGE
		PRESSURE REGULATOR
		P-TRAP
		RELIEF VALVE
		REMOVE TO THIS POINT
	SS	SANITARY SEWAGE (BELOW GRADE)
	SOV	SHUT-OFF VALVE
	SK	SINK
		STRAINER
		THERMOMETER
	TMV	THERMOSTATIC VALVE
	TP	TRAP PRIMER
		TRIPLE DUTY VALVE
	UG	UNDERGROUND
		UNION
	UIW	UP IN WALL
	UR	URINAL
	V	VENT
	VTR	VENT TO ROOF
	WC	WATER CLOSET
	WHA	WATER HAMMER ARRESTER
	WCO	WALL CLEANOUT

PLUMBING FIXTURE SCHEDULE

ID	Make	Model No.	Description	Mounting	Material
L-1	KOHLER	K-2196	DROP IN LAVATORY WITH OVERFLOW, HOT/COLD WATER HOLES 4" O.C., CHICAGO FAUCETS 420-T41ABCP, SINGLE LEVER DECK MOUNTED FAUCET WITH ASSE 1070 THERMOSTATIC CARTRIDGE AND 4" FIXED CENTERS, 1.50 GPM AERATOR, CHROME PLATE FINISH, J.R. SMITH CONCEALED ARM SUPPORT. DIMENSIONS: 20" x 18"	COUNTER	VIT. CHINA
SK-1	JUST	SLADA1921A55-J	SINGLE BOWL STAINLESS STEEL SINK WITH REAR FAUCET LEDGE WITH HOT/COLD WATER, SELF-RIMMING TOP MOUNT, CENTER-REAR DRAIN, FAUCET HOLES ON 4" CENTERS, JUST J-35-SSF DRAIN/STRAINER/TAILPIECE SYSTEM, CHICAGO 786-E35-369ABCP, 1.5GPM, 5-1/4" RIGID/SWING GOOSENECK SPOUT; MOUNT TO MEET ADA REQUIREMENTS. CHICAGO FAUCETS 1016-ABCP ANGLE STOP. PROVIDE WITH ZURN Z1175 HAIR TRAP. SINK OUTSIDE DIMENSIONS: 22"x19.5" SINK INSIDE DIMENSIONS: 18"x14"x6"	COUNTER	STAINLESS STEEL
SK-2	JUST	SLADA1921A55-J	SINGLE BOWL STAINLESS STEEL SINK WITH REAR FAUCET LEDGE WITH HOT/COLD WATER, SELF-RIMMING TOP MOUNT, CENTER-REAR DRAIN, FAUCET HOLES ON 4" CENTERS, JUST J-35-SSF DRAIN/STRAINER/TAILPIECE SYSTEM, CHICAGO 786-E35-369ABCP, 1.5GPM, 5-1/4" RIGID/SWING GOOSENECK SPOUT; MOUNT TO MEET ADA REQUIREMENTS. CHICAGO FAUCETS 1016-ABCP ANGLE STOP. SINK OUTSIDE DIMENSIONS: 22"x19.5" SINK INSIDE DIMENSIONS: 18"x14"x6"	COUNTER	STAINLESS STEEL
RD-1	ZURN	Z165	15" DIAMETER COMBINATION MAIN ROOF & OVERFLOW DRAIN WITH LOW SILHOUETTE DOMES & DOUBLE TOP-SET DECK PLATE. DURA-COATED CAST IRON BODIES WITH COMBINATION MEMBRANE FLASHING CLAMP/GRAVEL GUARDS, THREADED OUTLET. 3" OUTLET. SIZE OUTLET TO MATCH EXISTING.	ROOF	CAST IRON

PLUMBING FIXTURE CONNECTION SCHEDULE

ID	Description	Accessible	Connection Size (Inches)			
			Waste	Vent	CW	HW
L-1	LAVATORY	YES	3"	1-1/2"	1/2"	1/2"
SK-1	SINK	YES	3"	1-1/2"	1/2"	1/2"
SK-2	SINK	YES	3"	1-1/2"	1/2"	1/2"

PIPING MATERIALS SCHEDULE

Service	Location	Size	Material	Notes
WASTE & VENT	INTERIOR, AFF	ALL	STANDARD WEIGHT HUBLESS CAST IRON	SLOPED AT 1/4" PER FOOT
	INTERIOR, BELOW SLAB		STANDARD WEIGHT HUBLESS CAST IRON	
ROOF DRAIN	INTERIOR, AFF	ALL	STANDARD WEIGHT HUBLESS CAST IRON	SLOPED AT 1/4" PER FOOT
	INTERIOR, BELOW SLAB		STANDARD WEIGHT HUBLESS CAST IRON	
CW / HW	INTERIOR, ABOVE GROUND	ALL	TYPE "L" COPPER	
	INTERIOR, BELOW SLAB	ALL	TYPE "K" COPPER	
GAS	EXTERIOR, ABOVE GRADE	ALL	BLACK STEEL THREADED	2" AND SMALLER - THREADED CONNECTIONS, LARGER THAN 2" - WELDED CONNECTIONS
COND. DRAIN	AIR CONDITIONING CONDENSATE	ALL	TYPE M - HARD TEMPER COPPER	SLOPED AT 1/8" PER FOOT
	FUEL-FIRED APPLIANCE CONDENSATE	ALL	SCHEDULE 40 PVC-DWV	

NOTES:

1. PLACE SUPPORTS AT 8'-0" ON CENTER AND AT ALL CHANGES IN DIRECTION.

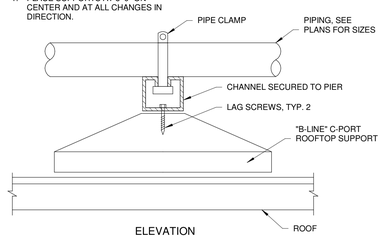

3 / P100 PIPE SUPPORT ON ROOF DETAIL
NOT TO SCALE

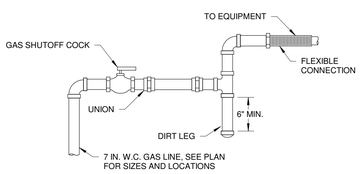

2 / P100 GAS CONNECTION DETAIL
NOT TO SCALE

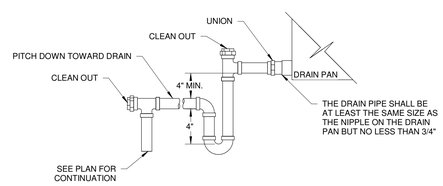

1 / P100 HVAC CONDENSATE DRAIN DETAIL
NOT TO SCALE

Copyright © 2025

All ideas, designs, arrangements and plans indicated or represented by this drawing are owned by, and the property of, NICHOLS, MELBURG and ROSSETTO and were created, evolved and developed for use on, and in conjunction with, the specified project. None of such ideas, designs, arrangements or plans shall be used by, or disclosed to any person, firm or corporation for any purpose whatsoever without the written permission of NICHOLS, MELBURG and ROSSETTO.

NICHOLS MELBURG & ROSSETTO
ARCHITECTS + ENGINEERS
300 KNOLLCREST DRIVE
REDDING, CA 96002
(530) 222-3300 (530) 222-3538 FAX
http://www.nmrdesign.com

CONSULTANTS

FRONTIER
CONSULTING ENGINEERS
2727 Bechelli Lane · Redding, CA 96002
Ph: (530) 232-6160 · www.frontierce.com

LICENSE STAMPS

REGISTERED PROFESSIONAL ENGINEER
ROB K. ASHAUER
No. M35823
EXP. 3-31-2026
MECHANICAL
STATE OF CALIFORNIA

PROJECT NAME

RENOVATION FOR

Humboldt County Animal Shelter

980 Lycoming Ave
McKinleyville, CA 95519

SHEET TITLE

PLUMBING LEGENDS AND SCHEDULES

DRAWING STATUS

CONSTRUCTION DOCUMENTS

REVISIONS

Sym.	Description	Date

Drawn By	EG
Date Issued	04-03-2026
Scale	1/8" = 1'-0"
Project No.	17-6430

SHEET No.

P100

KEYED NOTES:

1. INSTALL NEW PLUMBING FIXTURE IN PLACE OF EXISTING. SHUT DOWN EXISTING WATER SERVICE AS REQUIRED TO PROVIDE NEW ANGLE STOPS AND SUPPLY LINES. PROVIDE NEW PLUMBING TRAP. CONNECT TO EXISTING WATER, SEWER, AND VENT INSIDE WALL AND MAKE ALL REQUIRED MODIFICATIONS TO EXISTING PIPING TO CONNECT NEW FIXTURE TO EXISTING SYSTEMS.

2. DISCONNECT AND RECONNECT CONDENSATE DRAIN FOR NEW FAN COIL UNIT.

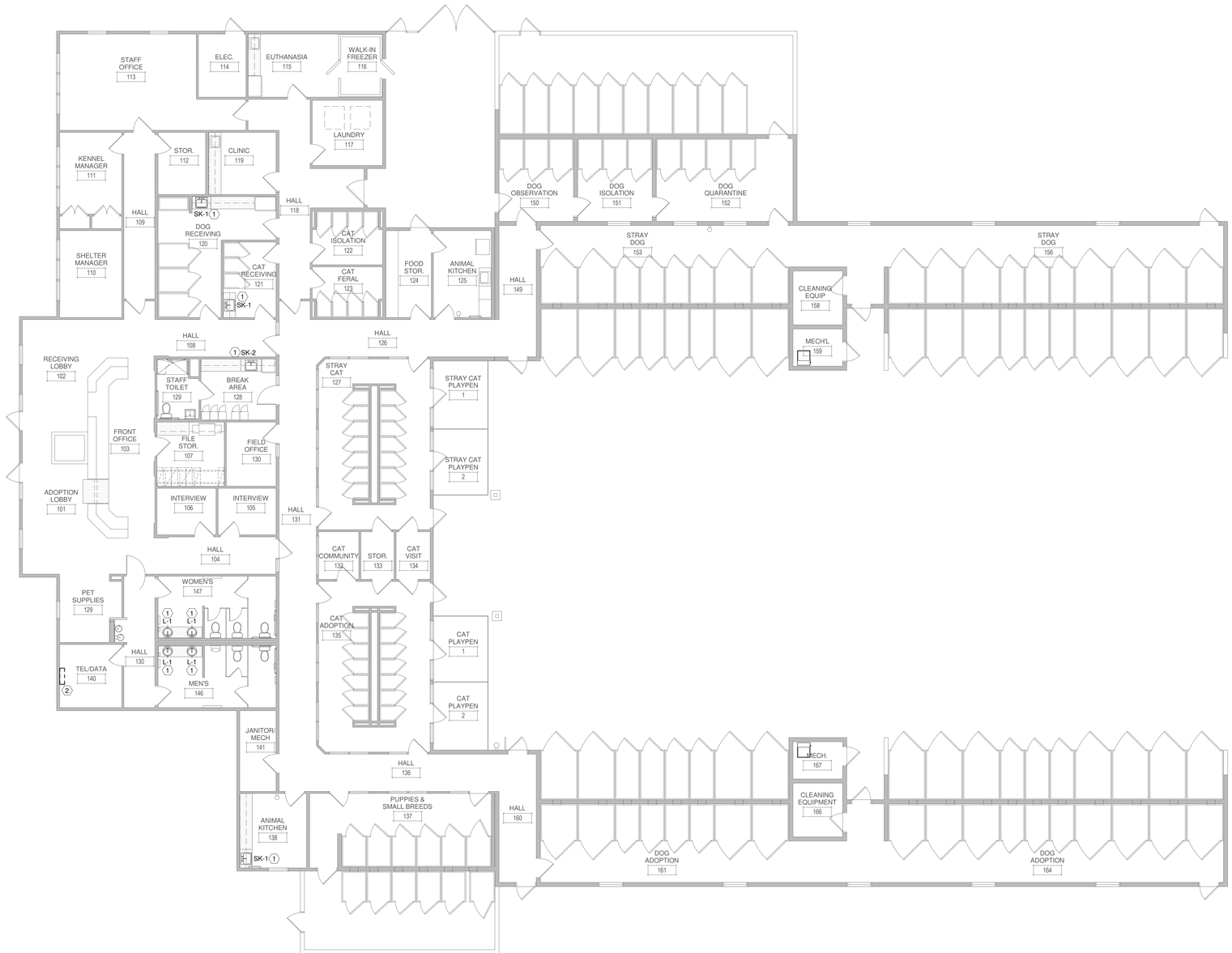

1 / P210 PLUMBING FLOOR PLAN

1/8" = 1'-0"

Copyright © 2025

All ideas, designs, arrangements and plans indicated or represented by this drawing are owned by, and the property of, NICHOLS, MELBURG and ROSSETTO and were created, evolved and developed for use on, and in conjunction with, the specified project. None of such ideas, designs, arrangements or plans shall be used by, or disclosed to any person, firm or corporation for any purpose whatsoever without the written permission of NICHOLS, MELBURG and ROSSETTO.

NICHOLS MELBURG & ROSSETTO
ARCHITECTS + ENGINEERS

300 KNOLLCREST DRIVE
REDDING, CA 96002
(530) 222-3300 (530) 222-3538 FAX
http://www.nmrdesign.com

CONSULTANTS

FRONTIER
CONSULTING ENGINEERS
2727 Bechelli Lane · Redding, CA 96002
Ph: (530) 232-6160 · www.frontierce.com

LICENSE STAMPS

REGISTERED PROFESSIONAL ENGINEER
JOB E. ASPUJAMO
No. M35023
EXP. 3-31-2026
MECHA NICAL
STATE OF CALIFORNIA

PROJECT NAME

RENOVATION FOR

Humboldt County Animal Shelter

980 Lycoming Ave
McKinleyville, CA 95519

SHEET TITLE

PLUMBING FLOOR PLAN

DRAWING STATUS

CONSTRUCTION DOCUMENTS

REVISIONS

Sym.	Description	Date

Drawn By	EG
Date Issued	04-03-2026
Scale	1/8" = 1'-0"
Project No.	17-6430

SHEET No.

P210

KEYED NOTES:

1. INSTALL NEW COMBINATION ROOF DRAIN IN PLACE OF EXISTING. MODIFY EXISTING PRIMARY AND SECONDARY DRAIN PIPING AS REQUIRED TO CONNECT TO NEW ROOF DRAIN.

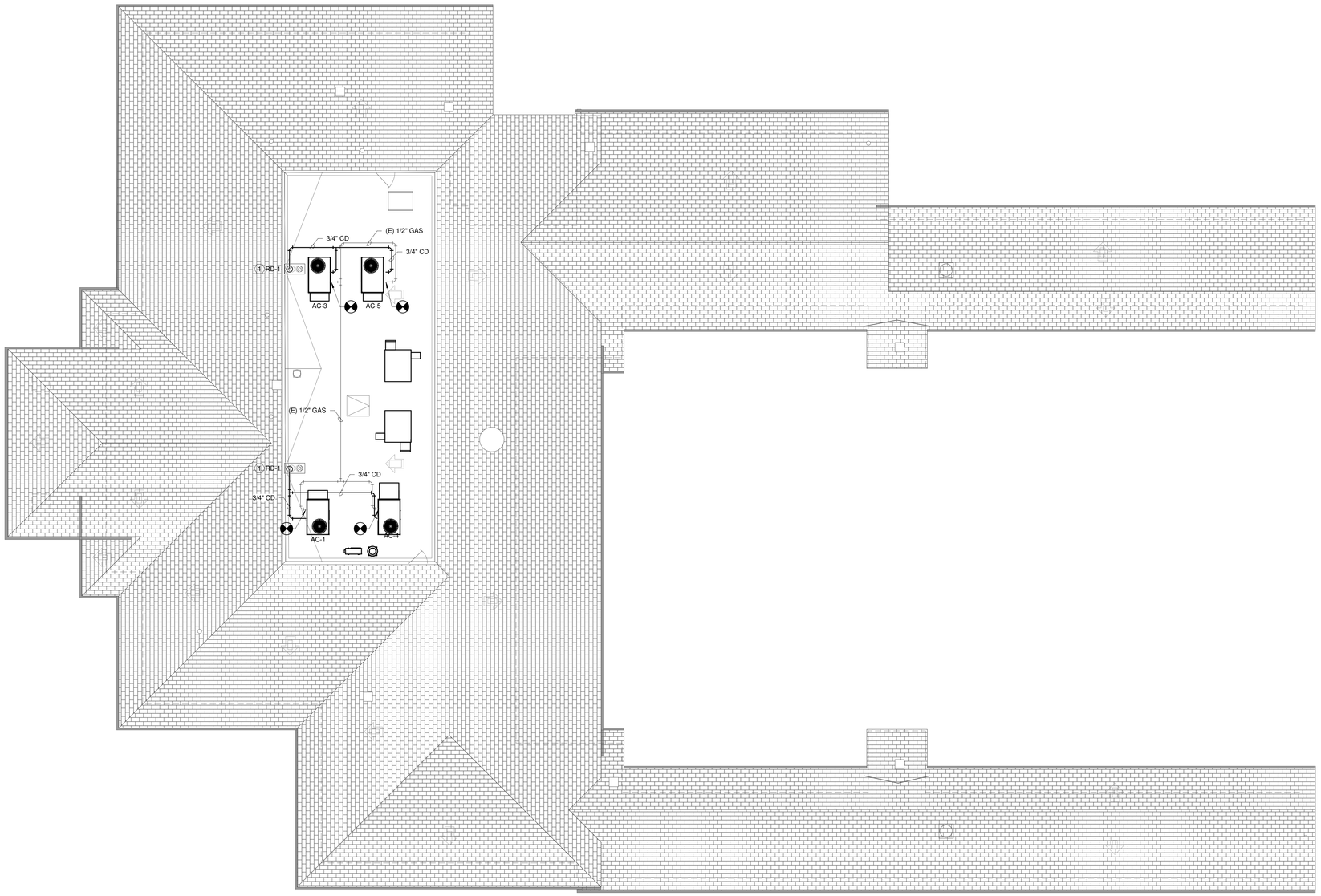

1 / P240 PLUMBING ROOF PLAN
1/8" = 1'-0"

Copyright © 2025

All ideas, designs, arrangements and plans indicated or represented by this drawing are owned by, and the property of, NICHOLS, MELBURG and ROSSETTO and were created, evolved and developed for use on, and in conjunction with, the specified project. None of such ideas, designs, arrangements or plans shall be used by, or disclosed to any person, firm or corporation for any purpose whatsoever without the written permission of NICHOLS, MELBURG and ROSSETTO.

NICHOLS MELBURG & ROSSETTO
ARCHITECTS + ENGINEERS
300 KNOLLCREST DRIVE
REDDING, CA 96002
(530) 222-3300 (530) 222-3538 FAX
http://www.nmrdesign.com

CONSULTANTS

FRONTIER
CONSULTING ENGINEERS
2727 Bechelli Lane · Redding, CA 96002
Ph: (530) 232-6160 · www.frontierce.com

LICENSE STAMPS

REGISTERED PROFESSIONAL ENGINEER
JOB E. ASPAJUMA
No. M35823
EXP. 3-31-2026
MECHA NICHOLS
STATE OF CALIFORNIA

PROJECT NAME

RENOVATION FOR

Humboldt County Animal Shelter

980 Lycoming Ave
McKinleyville, CA 95519

SHEET TITLE

PLUMBING ROOF PLAN

DRAWING STATUS

CONSTRUCTION DOCUMENTS

REVISIONS

Sym.	Description	Date

Drawn By	EG
Date Issued	04-03-2026
Scale	1/8" = 1'-0"
Project No.	17-6430

SHEET No.

P240

ELECTRICAL LEGEND AND ABBREVIATIONS

RACEWAYS

- CONDUIT; EXPOSED ON WALL OR CEILING
- CONDUIT; CONCEALED
- CONDUIT; TURNED DOWN
- CONDUIT; TURNED UP
- LA-2 — CONDUIT HOMERUN; DESTINATION SHOWN. 1/2"C-2#12,1#12G, UON.
- TICK MARKS ON BRANCH CIRCUIT CONDUIT RUNS INDICATE QUANTITY OF CONDUCTORS AS FOLLOWS:
  1. SHORT TICK MARKS INDICATE THE NUMBER OF #12 AWG CURRENT CARRYING CONDUCTORS, UON.
  2. SHORT TICK MARK WITH A FILLED DOT INDICATES A #12 AWG NEUTRAL CONDUCTOR, UON.
  3. LONG TICK MARK INDICATES A #12 AWG EQUIPMENT GROUNDING CONDUCTOR, UON.

POWER DISTRIBUTION

- SWITCHBOARD, SWITCHGEAR, DISTRIBUTION BOARD, OR MOTOR CONTROL CENTER; FLOOR MOUNTED. PROVIDE WITH HOUSEKEEPING PAD WHERE INDICATED.
- DISTRIBUTION PANELBOARD, SURFACE MOUNTED ON WALL.
- PANELBOARD; SURFACE MOUNTED ON WALL.
- PANELBOARD; RECESSED MOUNTED IN WALL.
- DRY-TYPE STEP-DOWN TRANSFORMER; FLOOR MOUNTED.
- 10 — ELECTRIC MOTOR; HORSEPOWER INDICATED.
- P — PULLBOX
- EC — ELECTRIC VEHICLE CAPABLE PULLBOX
- EV — ELECTRIC VEHICLE SUPPLY EQUIPMENT
- XXAS XXAF — FUSED SAFETY DISCONNECT SWITCH; 3-POLE UON. WP WHERE INDICATED.
- XXA XP — NON-FUSED SAFETY DISCONNECT SWITCH; 3-POLE UON. WP WHERE INDICATED.
- 1 — MAGNETIC MOTOR STARTED WITH INTEGRATED OVERCURRENT PROTECTION. ADJACENT NUMBER INDICATES NEMA SIZE OF STARTER. HANDLE DENOTES INTEGRATED DISCONNECT.
- VFD — VARIABLE FREQUENCY DRIVE FURNISHED UNDER ANOTHER DIVISION. INSTALL VFD AND PROVIDE POWER SERVICE CONNECTION. HANDLE DENOTES INTEGRATED DISCONNECT.
- 100A 3P / 100A LSIG — GROUP-MOUNTED MOLDED CASE CIRCUIT BREAKER; BREAKER RATING AND NUMBER OF POLES AS SHOWN ON DRAWINGS.
  - LSI: INDICATES ADJUSTABLE MAGNETIC OR ELECTRONIC TRIP.
  - LSIG: INDICATES ADJUSTABLE MAGNETIC OR ELECTRONIC TRIP WITH INTEGRATED GROUND FAULT PROTECTION.
- XXAS XXAF XP — GROUP-MOUNTED FUSED DISCONNECT SWITCH OR BOLTED PRESSURE CONTACT SWITCH.
- G — GROUND FAULT RELAY; INTEGRAL WITH CIRCUIT BREAKER
- ST — SHUNT-TRIP INTEGRAL WITH OVERCURRENT PROTECTION DEVICES
- 1 K — KIRK-KEY INTERLOCK; INTEGRAL WITH OVERCURRENT PROTECTION DEVICES. ADJACENT NUMBER CORRESPONDS WITH DEVICE INTERLOCK.
- M — PRIVATE METER; MOUNTED INTEGRAL WITH OVERCURRENT PROTECTION OR SEPARATE WITHIN SWITCHGEAR.
- M — UTILITY METER; MOUNTED IN UTILITY SECTION OF SWITCHGEAR OR SWITCHBOARDS.

WIRING DEVICES

- JUNCTION BOX; WALL MOUNTED, +18" AFF UON.
- J — JUNCTION BOX; SURFACE OR PENDANT MOUNTED.
- HARD-WIRED EQUIPMENT CONNECTION POINT.
- DUPLEX CONVENIENCE RECEPTACLE DEVICE; WALL MOUNTED, +18" AFF, UON. LETTERING ADJACENT TO DEVICE INDICATES THE FOLLOWING:
  - A: ARC FAULT CIRCUIT INTERRUPTER (AFCI)
  - IG: ISOLATED GROUND
  - L: LOCKABLE; WITH LOCKABLE "IN USE" COVER.
  - USB: INTEGRATED USB PORTS
  - WP: WEATHER-RESISTANT; WITH WEATHER-PROOF "IN USE" COVER"
- QUADRUPLEX CONVENIENCE RECEPTACLE DEVICE; WALL MOUNTED, +18" AFF, UON.
- DUPLEX OR QUADRUPLEX CONVENIENCE RECEPTACLE DEVICE; WALL MOUNTED, WITH INTEGRATED GROUND FAULT CIRCUIT INTERRUPTER (GFCI), +18" AFF UON.
- DUPLEX OR QUADRUPLEX CONVENIENCE RECEPTACLE DEVICE; WALL MOUNTED, CONTROLLED PER T24, +18" AFF UON.
- DUPLEX CONVENIENCE RECEPTACLE DEVICE, WALL MOUNTED ABOVE COUNTER, 6" ABOVE BACKSPLASH UON, BUT NOT HIGHER THAN ADA REQUIREMENTS.
- DUPLEX OR QUADRUPLEX CONVENIENCE RECEPTACLE DEVICE; MOUNTED IN FLUSH FLOOR BOX.
- COMBINATION POWER/TELECOMMUNICATIONS DEVICE, MOUNTED IN FLUSH FLOOR BOX.
- DUPLEX OR QUADRUPLEX CONVENIENCE RECEPTACLE DEVICE; MOUNTED FLUSH IN CEILING.
- DUPLEX CONVENIENCE RECEPTACLE DEVICE; CORD OR REEL HUNG FROM STRUCTURE ABOVE. TYPE AS NOTED ON PLANS.
- 208/240V SINGLE-PHASE RECEPTACLE; WALL MOUNTED, +18" AFF, UON.
- SPECIALTY OUTLET DEVICE, NEMA CONFIGURATION TYPE AS NOTED ON PLANS; WALL MOUNTED, +18" AFF, UON.
- $M — FRACTIONAL HORSEPOWER MOTOR STARTER/DISCONNECT SWITCH; MOUNTED ADJACENT TO MOTOR.

LIGHTING

- LUMINAIRE; RECESSED IN CEILING.
- LUMINAIRE; SURFACE MOUNTED.
- LUMINAIRE; SUSPENDED LINEAR. SUSPENSION POINTS ARE GRAPHIC AND DO NOT REPRESENT ACUTAL LOCATIONS OR QUANTITY.
- ROUND DOWNLIGHT LUMINAIRE; RECESSED IN CEILING.
- SQUARE DOWNLIGHT LUMINAIRE; RECESSED IN CEILING.
- DIRECTIONAL LUMINAIRE; RECESSED IN CEILING.
- DECORATIVE LUMINAIRE; PENDANT MOUNTED.
- EXIT SIGN LUMINAIRE, CEILING OR WALL MOUNTED WITH DIRECTIONAL ARROWS AS NOTED ON THE PLANS.
- COMBO EXIT SIGN AND EGRESS LUMINAIRE; CEILING OR WALL MOUNTED WITH ARROWS AS NOTED ON PLANS.
- EMERGENCY SELF-POWERED BATTERY PACK WITH LUMINAIRE HEADS AS NOTED ON PLANS.
- HALF SHADING OF ANY LUMINAIRE INDICATES EMERGENCY/EGRESS LIGHTING. PROVIDE WITH A MINIMUM OF 90 MINUTES OF BACKUP POWER IN ACCORDANCE WITH CBC 1008.3.5.

LIGHTING CONTROLS

- $ / $X — SINGLE-POLE, SINGLE-THROW SWITCH; WALL MOUNTED, +42" AFF, UON. LETTERING ADJACENT TO DEVICE INDICATES THE FOLLOWING:
  - 3: THREE-WAY
  - 4: FOUR-WAY
  - K: KEY-OPERATED
  - D: DIMMER
  - T: TIMER
  - O: OCCUPANCY SENSOR
  - V: VACANCY SENSOR
  - DO: COMBINATION OCCUPANCY SENSOR AND DIMMER SWITCH.
- OC — OCCUPANCY SENSOR FOR AREA COVERAGE; CEILING MOUNTED.
- DAYLIGHT HARVESTING SENSOR; CEILING MOUNTED.
- CR — PLUG LOAD CONTROLLER; UL LISTED FOR CONTROLLING RECEPTACLES, 20A RATED.

TELECOMMUNICATIONS / AUDIO/VISUAL

- TELECOMMUNICATION DEVICE; WALL MOUNTED, +18" AFF, UON. TWO DATA DROPS, UON.
- TELECOMMUNICATION DEVICE; WALL MOUNTED ABOVE COUNTER, 6" ABOVE BACKSPLASH UON, BUT NO HIGHER THAN ADA REQUIREMENTS. TWO DATA DROPS UON.
- TELEPHONE DEVICE; WALL MOUNTED, +42" AFF, UON.
- TELECOMMUNICATION DEVICE; MOUNTED IN FLUSH FLOOR BOX. TWO DATA DROPS, UON.
- TELECOMMUNICATION DEVICE; CEILING MOUNTED. TWO DATA DROPS UON.
- WIRELESS ACCESS POINT; CEILING MOUNTED.
- TV — FLUSH MOUNTED WALLBOX FOR TELEVISION; WALL MOUNTED, +72" AFF UON. PROVIDE WITH ONE COAXIAL PORT, ONE HDMI AND TWO DATA DROPS, UON.

ABBREVIATIONS

A	AMPERE
AC	ALTERNATING CURRENT
AFCI	ARC FAULT CIRCUIT INTERRUPTER
AF	OVERCURRENT FRAME SIZE (CIRCUIT BREAKERS) OR FUSE SIZE
AFF	ABOVE FINISHED FLOOR; TO CENTER OF DEVICE
AIC	ASYMMETRIC INTERRUPTING CURRENT
AL	ALUMINUM
AS	SAFETY SWITCH FRAME SIZE
AT	OVERCURRENT TRIP RATING (CIRCUIT BREAKERS)
ATS	AUTOMATIC TRANSFER SWITCH
BIL	BASIC INSULTATION LEVEL
CEC	CALIFORNIA ELECTRICAL CODE
C	CONDUIT
CKT	CIRCUIT
CT	CURRENT TRANSFORMER
CU	COPPER
(D)	DEMOLISH
DC	DIRECT CURRENT
(E)	EXISTING
EC	ELECTRICAL CONTRACTOR
EV	ELECTRIC VEHICLE
(F)	FUTURE
G / GND	GROUND
GFCI	GROUND FAULT CIRCUIT INTERRUPTER
GOAB	GANG OPERATED AIR BREAK SWITCH
HOA	HAND / OFF / AUTO SWITCH
J	JUNCTION BOX
LCP	LIGHTING CONTROL PANEL
LSI	LONG-TIME, SHORT-TIME, INSTANTANEOUS TRIP
MCB	MAIN CIRCUIT BREAKER
MCC	MOTOR CONTROL CENTER
MCOV	MAXIMUM CONTINUOUS OPERATING VOLTAGE
MLO	MAIN LUGS ONLY
MSB	MAIN SWITCHBOARD
MTS	MANUAL TRANSFER SWITCH
N	NEUTRAL
(N)	NEW
NC	NORMALLY CLOSED
NEC	NATIONAL ELECTRIC CODE
NEMA	NATIONAL ELECTRIC MANUFACTURER'S ASSOCIATION
NO	NORMALLY OPEN
PB	PULLBOX
PC	PHOTOCELL
PNL	PANELBOARD
PV	PHOTOVOLTAIC
(R)	RELOCATE
RECEPT	RECEPTACLE
SPD	SURGE PROTECTION DEVICE
SWBD	SWITCHBOARD
SWGR	SWITCHGEAR
TYP.	TYPICAL
UON	UNLESS OTHERWISE NOTED
V	VOLTS
VA	VOLT-AMPS
VFD	VARIABLE FREQUENCY DRIVE
W	WATTS
WP	WEATHERPROOF
XFMR	TRANSFORMER

LUMINAIRE SCHEDULE

ID	Manufacturer	Model	Lamp	Luminous Flux	Color Temperature	Apparent Load	Description
S1	LITHONIA	DSX0	LED	3586 lm	2700 K	34 VA	EXTERIOR POLE MOUNTED AREA FIXTURE, PERFORMANCE PACKAGE 1, TYPE BLCW DISTRIBUTION, 23'-0" SSS SQUARE/RSS ROUND POLE MOUNTING WITH 2'-0" CONCRETE BASE, 120V AC. PROVIDE WITH BI-LEVEL MOTION/AMBIENT SENSOR. COORDINATE FINISH WITH OWNER.
S2	LITHONIA	DSX0	LED	3586 lm	2700 K	34 VA	EXTERIOR POLE MOUNTED AREA FIXTURE, PERFORMANCE PACKAGE 1, TYPE T3M DISTRIBUTION, 23'-0" SSS SQUARE/RSS ROUND POLE MOUNTING WITH 2'-0" CONCRETE BASE, 120V AC. PROVIDE WITH BI-LEVEL MOTION/AMBIENT SENSOR. COORDINATE FINISH WITH OWNER.

BRANCH PANEL AC1

LOCATION:
SUPPLY FROM:
MOUNTING SURFACE
ENCLOSURE: NEMA 1

VOLTS: 120/208 Wye
PHASES: 3
WIRES: 4
CIRCUITS: 42

A.I.C. RATING: EXISTING
BUS RATING: 225 A
MAIN: MLO

CKT	Circuit Description	Rating	Poles	A	B	C	A	B	C	Poles	Rating	Circuit Description	CKT
1				**2210**			**2210**						2
3	**(N) HVAC - AC-3**	**30 A**	**3**		**2210**			**2210**		**3**	**30 A**	**(N) HVAC - AC-5**	4
5						**2210**			**2210**				6
7				**1479**			**1037**						8
9	**(N) HVAC - ERV-2**	**20 A**	**3**		**1479**			**1037**		**3**	**15 A**	**(N) HVAC - ERV-1**	10
11						**1479**			**1037**				12
13				**2786**			**2786**						14
15	**(N) HVAC - AC-1**	**45 A**	**3**		**2786**			**2786**		**3**	**45 A**	**(N) HVAC - AC-4**	16
17						**2786**			**2786**				18
19	(E) ROOF RECPETS	20 A	1	540			1836			1	25 A	(E) DISHWASHER	20
21	(E) GARBAGE DISPOSAL	20 A	1		972			500		1	20 A	(E) HRU-1 ECONOMIZER	22
23	(E) GARBAGE DISPOSAL	20 A	1			972			500	1	20 A	(E) HRU-2 ECONOMOZER	24
25	(E) EXHAUST FAN - 4	20 A	1	300			3600						26
27	(E) EXHAUST FAN - 3	20 A	1		300			3600		3	30 A	(E) FREEZER	28
29						842			3600				30
31	(E) WASHER	20 A	3	842			1200			2	20 A	(E) FREEZER	32
33					842			1200					34
35	(E) DRYER	20 A	1			1272			**1331**	**2**	**20 A**	**(N) HVAC - HP-1**	36
37	(E) TRASH ENCL. GFI REC	20 A	1	180			**1331**						38
39	**(N) HVAC - EF-2**	**15 A**	**1**		**696**								40
41													42

	PHASE A	PHASE B	PHASE C
TOTAL LOAD (VOLT-AMPS):	22337 VA	20618 VA	21025 VA
TOTAL LOAD (AMPS):	187 A	172 A	176 A

VOLTAGE DROP BRANCH CIRCUIT TABLE

		MAXIMUM ALLOWED RUN LENGTH (FT)				
VOLT	AMP	#12	#10	#8	#6	#4
120	2	500	800	1200	2000	3250
	4	250	400	600	1000	1625
	6	175	250	400	650	1100
	8	125	200	325	500	800
	10	100	150	250	400	650
	12	85	125	200	350	550
	14	75	110	175	300	450
	16	60	100	150	250	400
277	2	1100	1800	2750		
	4	550	900	1375		
	6	350	600	950		
	8	275	450	700		
	10	225	350	550		
	12	175	300	475		
	14	150	250	400		
	16	140	225	360		

PANEL SCHEDULE BRANCH CIRCUIT SIZES SHALL ACCOUNT FOR VOLTAGE DROP. VOLTAGE DROP SHALL NOT EXCEED 3% FOR BRANCH CIRCUITS. COORDINATE BRANCH CIRCUIT LENGTH PER ACTUAL FIELD ROUTING WITH THE ABOVE VOLTAGE DROP TABLE. ADJUST BRANCH CIRCUIT CONDUCTOR SIZES AS REQUIRED. ADJUST CONDUIT SIZE AS REQUIRED FOR LARGER CONDUCTORS.

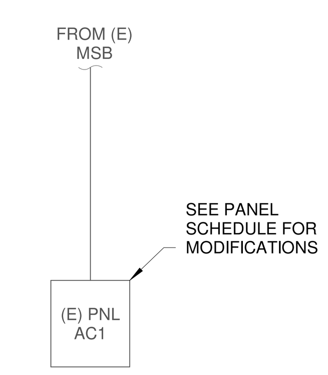

3 / E100 ONE-LINE DIAGRAM
NOT TO SCALE

NOMINAL VOLTAGE	MINIMUM CLEARANCE
0-150V	3'-0"
151-600V	4'-0"
601-1000V	5'-0"

NOTES

1. THE WIDTH OF THE WORKING SPACE SHALL PERMIT A 90-DEGREE MINIMUM OPENING FOR HINGED PANELS AND EQUIPMENT DOORS.
2. THE HEIGHT OF THE WORKING SPACE SHALL EXTEND FROM GRADE, FINISHED FLOOR, OR PLATFORM TO A HEIGHT OF 6'-6" OR THE HEIGHT OF THE EQUIPMENT, WHICHEVER IS GREATER.

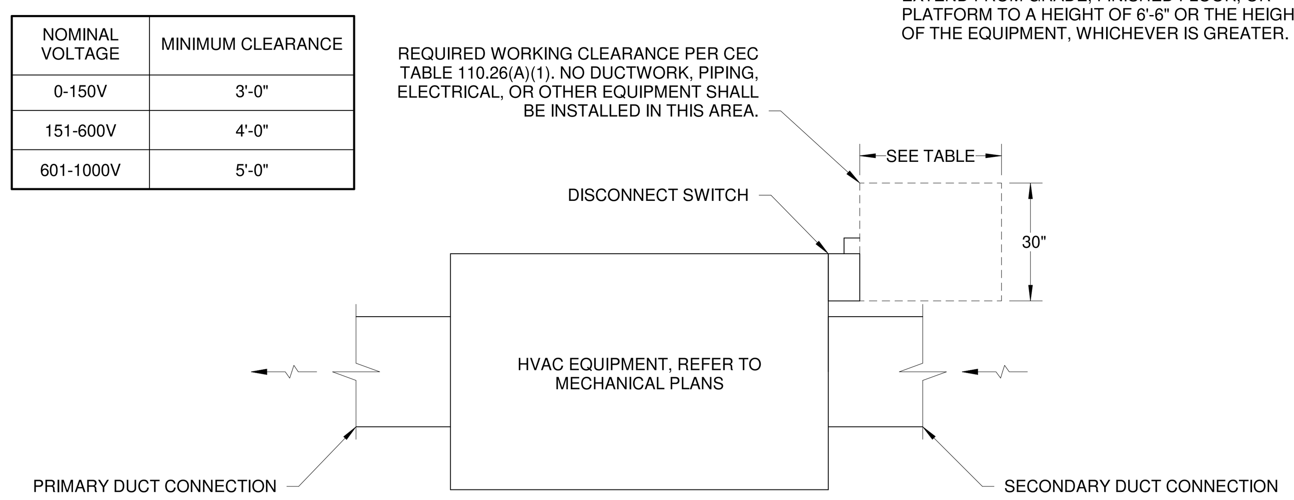

2 / E100 TYPICAL HVAC CLEARANCE DETAIL
NOT TO SCALE

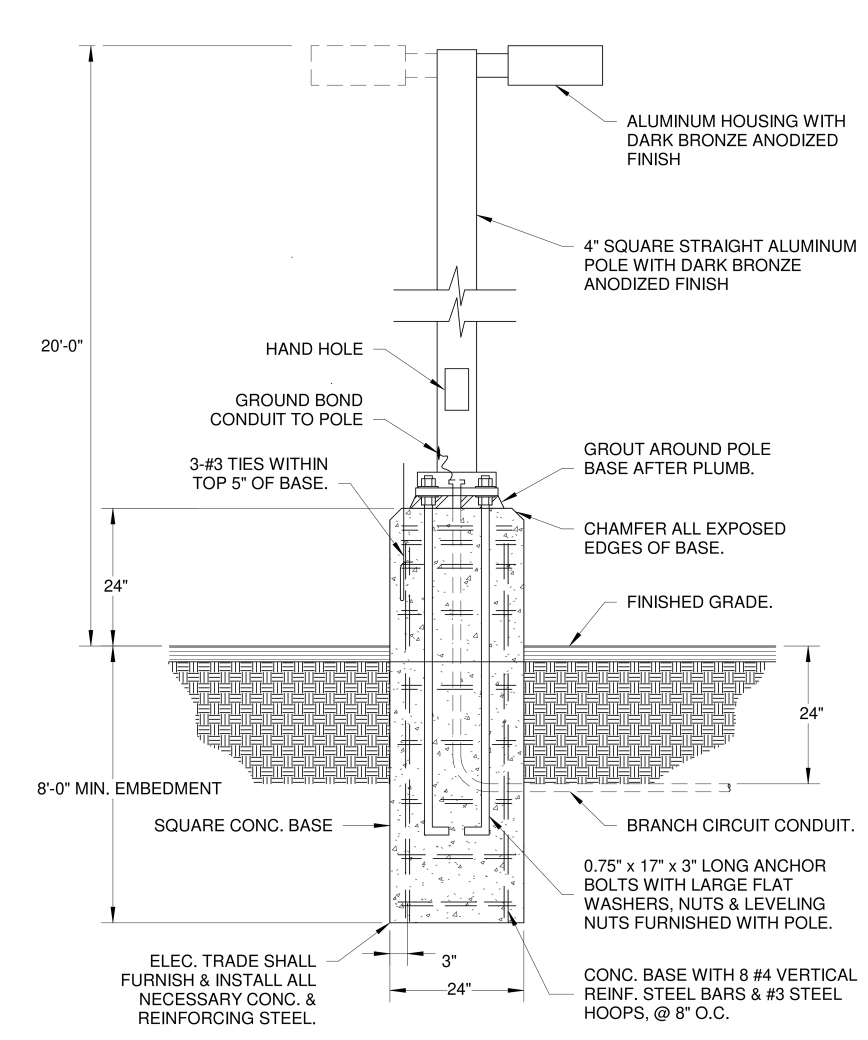

1 / E100 POLE LIGHT DETAIL WITH SQUARE CONC. BASE
NOT TO SCALE

Copyright © 2025

All ideas, designs, arrangements and plans indicated or represented by this drawing are owned by, and the property of, NICHOLS, MELBURG and ROSSETTO and were created, evolved and developed for use on, and in conjunction with, the specified project. None of such ideas, designs, arrangements or plans shall be used by, or disclosed to any person, firm or corporation for any purpose whatsoever without the written permission of NICHOLS, MELBURG and ROSSETTO.

NICHOLS MELBURG & ROSSETTO
ARCHITECTS + ENGINEERS
300 KNOLLCREST DRIVE
REDDING, CA. 96002
(530) 222-3300 (530) 222-3538 FAX
http://www.nmrdesign.com

CONSULTANTS

FRONTIER CONSULTING ENGINEERS
2727 Bechelli Lane - Redding, CA 96002
Ph: (530) 232-6160 - www.frontierce.com

LICENSE STAMPS

REGISTERED PROFESSIONAL ENGINEER NATHANIEL J. WARNER No. E25042 EXP. 06-30-2026 ELECTRICAL STATE OF CALIFORNIA

PROJECT NAME

RENOVATION FOR

Humboldt County Animal Shelter

980 Lycoming Ave
McKinleyville, CA 95519

SHEET TITLE

ELECTRICAL LEGENDS AND SCHEDULES

DRAWING STATUS

CONSTRUCTION DOCUMENTS

REVISIONS

Sym.	Description	Date

Drawn By	TM
Date Issued	04-03-2026
Scale	1/8" = 1'-0"
Project No.	17-6430

SHEET No.

E100

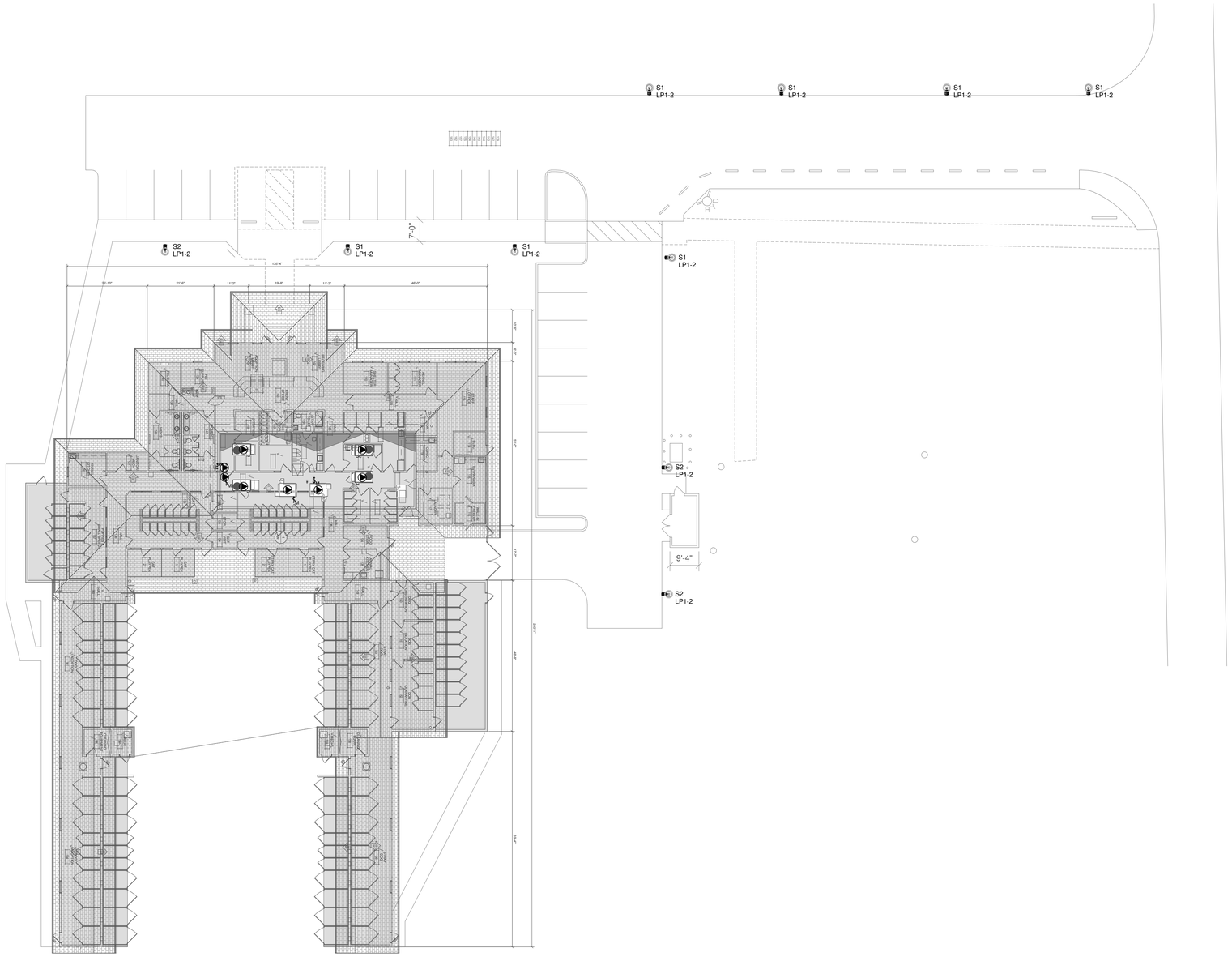

1 E200 ELECTRICAL SITE PLAN
1/16" = 1'-0"

N

Copyright © 2025

All ideas, designs, arrangements and plans indicated or represented by this drawing are owned by, and the property of, NICHOLS, MELBURG and ROSSETTO and were created, evolved and developed for use on, and in conjunction with, the specified project. None of such ideas, designs, arrangements or plans shall be used by, or disclosed to any person, firm or corporation for any purpose whatsoever without the written permission of NICHOLS, MELBURG and ROSSETTO.

NICHOLS MELBURG & ROSSETTO
ARCHITECTS + ENGINEERS

300 KNOLLCREST DRIVE
REDDING, CA 96002
(530) 222-3300 (530) 222-3538 FAX
http://www.nmrdesign.com

CONSULTANTS

FRONTIER
CONSULTING ENGINEERS
2727 Bechelli Lane · Redding, CA 96002
Ph: (530) 232-6160 · www.frontierce.com

LICENSE STAMPS

REGISTERED PROFESSIONAL ENGINEER
DANIEL J. WARNER
No. E25042
EXP. 06-30-2026
ELECTRICAL
STATE OF CALIFORNIA

PROJECT NAME

RENOVATION FOR

Humboldt County Animal Shelter

980 Lycoming Ave
McKinleyville, CA 95519

SHEET TITLE

ELECTRICAL SITE PLAN

DRAWING STATUS

CONSTRUCTION DOCUMENTS

REVISIONS

Sym.	Description	Date

Drawn By	TM
Date Issued	04-03-2026
Scale	1/16" = 1'-0"
Project No.	17-6430

SHEET No.

E200

CALCULATION SUMMARY						
AREA	ILLUMINANCE (fc)			HORIZONTAL UNIFORMITY RATIOS		
	IES STANDARD	DESIGN	TYPE	IES STANDARD	DESIGN	TYPE
OFFICE PARKING LOT	0.2	1.0	MIN	20.0	4.3:1	MAX/MIN

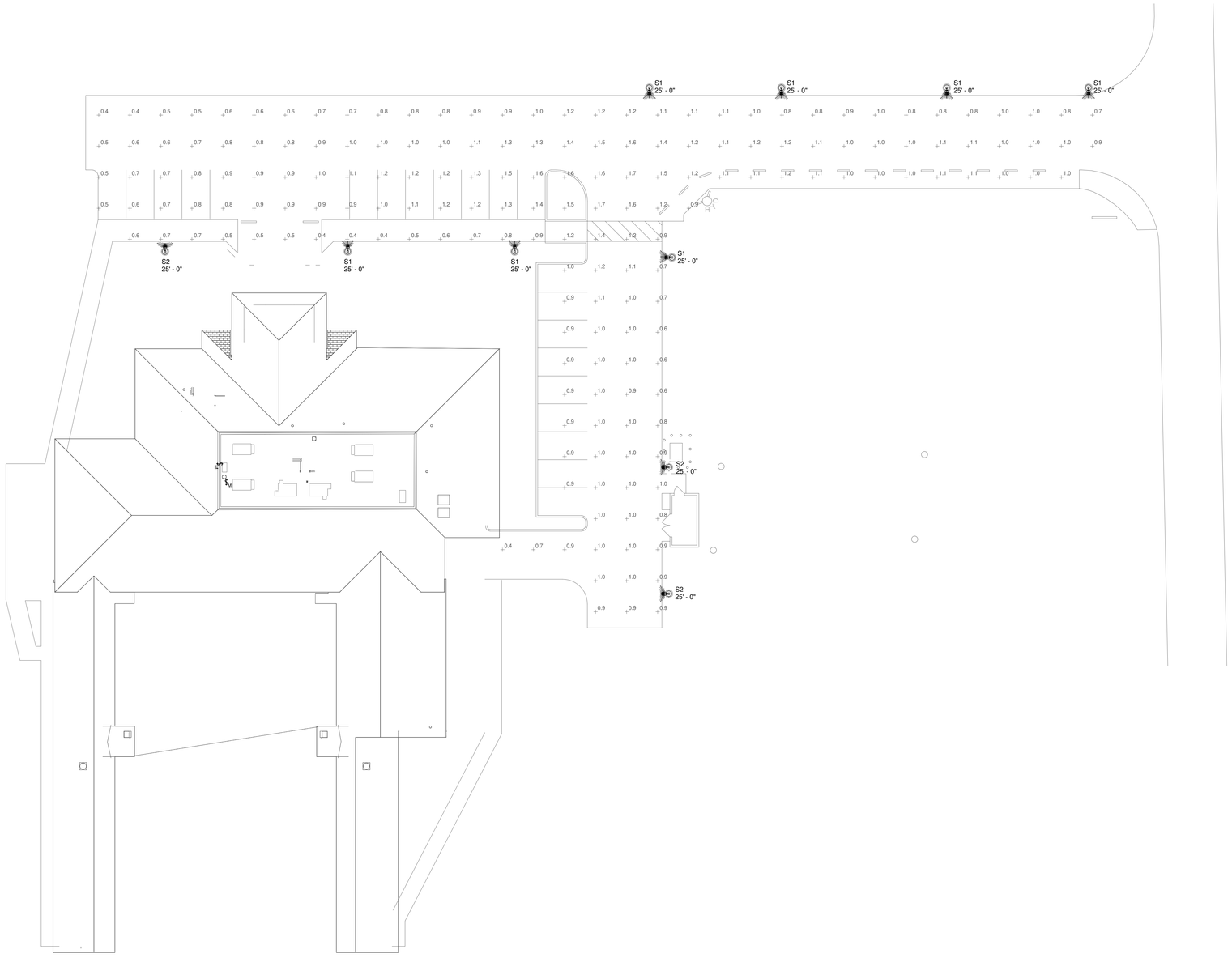

1 E201 ELECTRICAL SITE PHOTOMETRICS PLAN
1/16" = 1'-0"

N

Copyright © 2025
All ideas, designs, arrangements and plans indicated or represented by this drawing are owned by, and the property of, NICHOLS, MELBURG and ROSSETTO and were created, evolved and developed for use on, and in conjunction with, the specified project. None of such ideas, designs, arrangements or plans shall be used by, or disclosed to any person, firm or corporation for any purpose whatsoever without the written permission of NICHOLS, MELBURG and ROSSETTO.

NICHOLS MELBURG & ROSSETTO
ARCHITECTS + ENGINEERS
300 KNOLLCREST DRIVE
REDDING, CA 96002
(530) 222-3300 (530) 222-3538 FAX
http://www.nmrdesign.com

CONSULTANTS

FRONTIER
CONSULTING ENGINEERS
2727 Bechelli Lane · Redding, CA 96002
Ph: (530) 232-6160 · www.frontierce.com

LICENSE STAMPS

REGISTERED PROFESSIONAL ENGINEER
DANIEL J. WARNER
No. 125042
EXP. 06-30-2026
ELECTRICAL
STATE OF CALIFORNIA

PROJECT NAME

RENOVATION FOR

Humboldt County Animal Shelter

980 Lycoming Ave
McKinleyville, CA 95519

SHEET TITLE

ELECTRICAL SITE PHOTOMETRICS PLAN

DR[illegible]US

CONSTRUCTION DOCUMENTS

REVISIONS

Sym.	Description	Date

Drawn By	TM
Date Issued	04-03-2026
Scale	As indicated
Project No.	17-6430

SHEET No.

E201

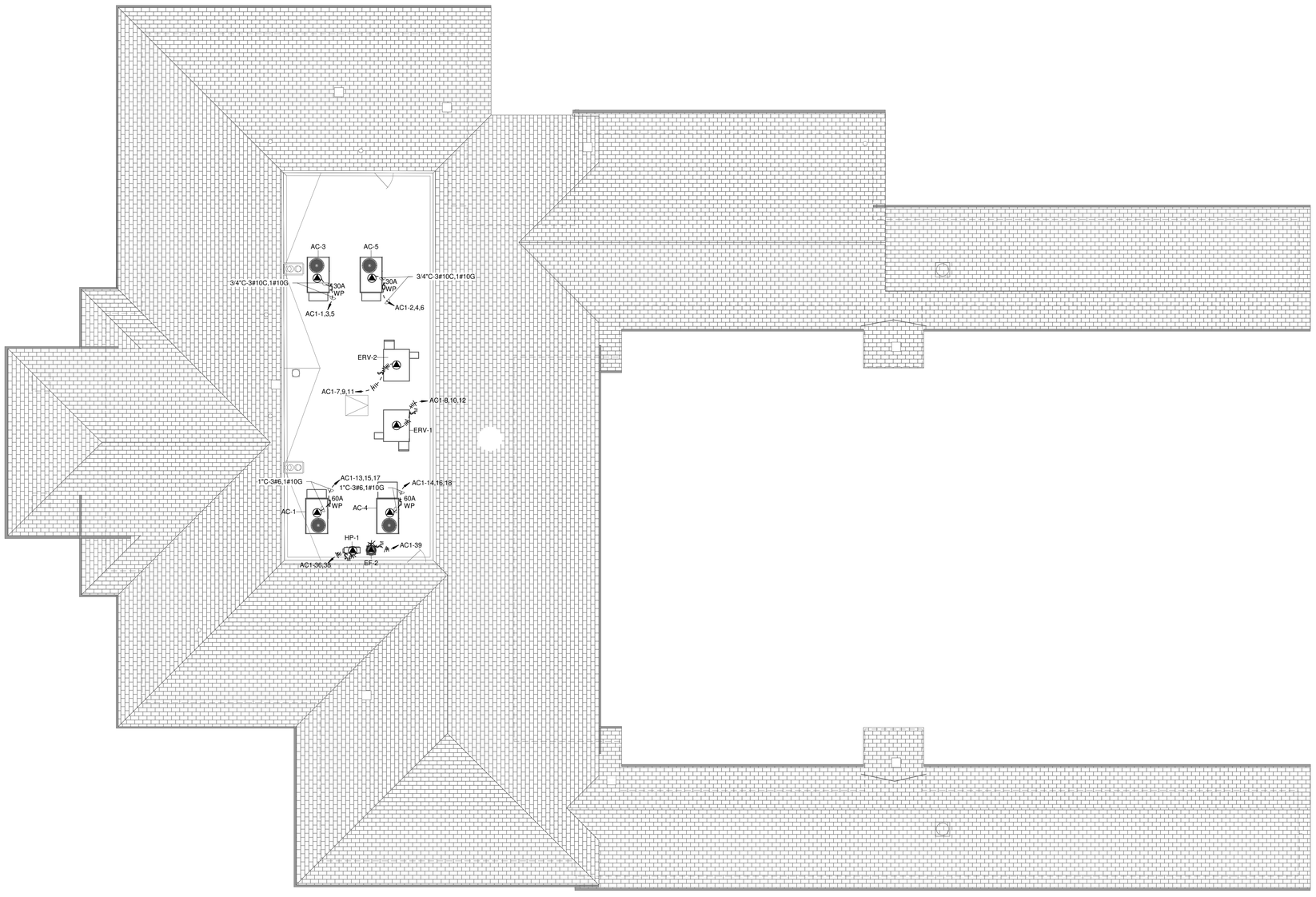

1 / E240 ELECTRICAL ROOF PLAN

1/8" = 1'-0"

Copyright © 2025

All ideas, designs, arrangements and plans indicated or represented by this drawing are owned by, and the property of, NICHOLS, MELBURG and ROSSETTO and were created, evolved and developed for use on, and in conjunction with, the specified project. None of such ideas, designs, arrangements or plans shall be used by, or disclosed to any person, firm or corporation for any purpose whatsoever without the written permission of NICHOLS, MELBURG and ROSSETTO.

NICHOLS MELBURG & ROSSETTO
ARCHITECTS + ENGINEERS

300 KNOLLCREST DRIVE
REDDING, CA 96002
(530) 222-3300 (530) 222-3538 FAX
http://www.nmrdesign.com

CONSULTANTS

FRONTIER CONSULTING ENGINEERS
2727 Bechelli Lane · Redding, CA 96002
Ph: (530) 232-6160 · www.frontierce.com

LICENSE STAMPS

REGISTERED PROFESSIONAL ENGINEER
DANIEL J. MARKER
No. E22042
Exp. 06-30-2026
ELECTRICAL
STATE OF CALIFORNIA

PROJECT NAME

RENOVATION FOR

Humboldt County Animal Shelter

980 Lycoming Ave
McKinleyville, CA 95519

SHEET TITLE

ELECTRICAL ROOF PLAN

DRAWING STATUS

CONSTRUCTION DOCUMENTS

REVISIONS

Sym.	Description	Date

Drawn By	TM
Date Issued	04-03-2026
Scale	1/8" = 1'-0"
Project No.	17-6430

SHEET No.

E240

STATE OF CALIFORNIA
Outdoor Lighting CALIFORNIA ENERGY COMMISSION

CERTIFICATE OF COMPLIANCE		NRCC-LTO-E
Project Name: Humboldt County Animal Shelter	**Report Page:**	**(Page 1 of 11)**
	Date Prepared:	2025-12-22T15:06:27-05:00

F. OUTDOOR LIGHTING FIXTURE SCHEDULE

For new or altered lighting systems demonstrating compliance with §140.7 / §170.2(e)6 all new luminaires being installed and any existing luminaires remaining or being moved within the spaces covered by the permit application are included in the Table below. For altered lighting systems using the Existing Power method per §141.0(b)2L only new luminaires being installed and replacement luminaires being installed as part of the project scope are included (ie, existing luminaires remaining or existing luminaires being moved are not included). Outdoor lighting attached to multifamily buildings and controlled from the inside of a dwelling unit are included in Table H. and are not included here. All other multifamily outdoor lighting is included here.

Designed Wattage:

01	02	03	04	05	06	07	08	09	10
									Field Inspector

STATE OF CALIFORNIA
Outdoor Lighting CALIFORNIA ENERGY COMMISSION

CERTIFICATE OF COMPLIANCE		NRCC-LTO-E
Project Name: Humboldt County Animal Shelter	**Report Page:**	**(Page 2 of 11)**
	Date Prepared:	2025-12-22T15:06:27-05:00

C. COMPLIANCE RESULTS

Results in this table are automatically calculated from data input and calculations in Tables F through N. Note: If any cell on this table says "COMPLIES with Exceptional Conditions" refer to Table D. Exceptional Conditions for guidance or see applicable Table referenced below.

Calculations of Total Allowed Lighting Power (Watts) §140.7 / §170.2(e)6 or §141.0(b)2L / § 180.2(b)4Bv														
Compliance Results														
01		02		03		04		05		06		07	08	09
General Hardscape Allowance §140.7(d)1 / §170.2(e)6 (See Table I)	+	Per Application §140.7(d)2 / §170.2(e)6 (See Table J)	+	Sales Frontage §140.7(d)2 (See Table K)	+	Ornamental §140.7(d)2 / §170.2(e)6 (See Table L)	+	Per Specific Area §140.7(d)2 / §170.2(e)6 (See Table M)	OR	Existing Power Allowance §141.0(b)2L / § 180.2(b)4Bv (See Table N)	=	**Total Allowed** (Watts)	≥	**Total Actual** (Watts)	**07 must be >= 08**
513.92	+	90	+	----	+	----	+	----	OR	----	=	603.92	≥	340	COMPLIES
Shielding Compliance [See Table G for Details]															N/A
Controls Compliance (See Table H for Details)															COMPLIES

D. EXCEPTIONAL CONDITIONS

This table is auto-filled with uneditable comments because of selections made or data entered in tables throughout the form.

E. ADDITIONAL REMARKS

This table includes remarks made by the permit applicant to the Authority Having Jurisdiction.

STATE OF CALIFORNIA
Outdoor Lighting CALIFORNIA ENERGY COMMISSION

CERTIFICATE OF COMPLIANCE		NRCC-LTO-E
This document is used to demonstrate compliance with requirements in §110.9, §130.0, §130.2, §140.7, and §141.0(b)2L for outdoor lighting scopes using the prescriptive path for nonresidential and hotel/motel occupancies. It is also used to document compliance with requirements in §160.5, §170.2(e)6, §180.1(a) and §180.2(b)4Bv for outdoor lighting scopes using the prescriptive path for multifamily and mixed-use occupancies. Multifamily includes dormitory and senior living facilities.		
Project Name: Humboldt County Animal Shelter	**Report Page:**	**(Page 1 of 11)**
Project Address: 980 Lycoming Ave, McKinleyville, CA 95519	**Date Prepared:**	2025-12-22T15:06:27-05:00

A. GENERAL INFORMATION

01	Project Location (city)	McKinleyville	04	Total Illuminated Hardscape Area (ft^2)	18451
02	Climate Zone	1			
03	Outdoor Lighting Zone per Title 24 Part 1 §10.114 or as designated by Authority Having Jurisdiction (AHJ):				
☐ LZ-0: Very Low - Undeveloped Parkland	☒ LZ-2: Moderate - Urban Clusters	☐ LZ-4: High - Must be reviewed by CA Energy Commission for Approval			
☐ LZ-1: Low - Rural Areas	☐ LZ-3: Moderately High - Urban Areas				
05	Occupancy Types within Project				
♦ Office					

B. PROJECT SCOPE

This table includes outdoor lighting systems that are within the scope of the permit application and are demonstrating compliance using the prescriptive path outlined in §140.7 / §170.2(e)6 or §141.0(b)2L / § 180.2(b)4Bv for alterations.

My Project Consists of:

01	02	
☐ New Lighting System	Must Comply with Allowances from §140.7 / §170.2(e)6	
☒ Altered Lighting System	is your alteration increasing the connected lighting load (Watts)?	○ Yes ● No
03	04	05
% of Existing Luminaires Being Altered[1]	Sum Total of Luminaires Being Added or Altered	Calculation Method
☐ < 10% ☐ >= 10% and < 50% ☒ >= 50%	10	Calculated Allowance per §140.7 / §170.2(e)6

[1] FOOTNOTES: % of Existing Luminaires Being Altered = (Sum Total of Luminaires Being Added or Altered / Existing Luminaires within the Scope of the Permit Application) x 100.

STATE OF CALIFORNIA
Outdoor Lighting CALIFORNIA ENERGY COMMISSION

CERTIFICATE OF COMPLIANCE		NRCC-LTO-E
Project Name: Humboldt County Animal Shelter	**Report Page:**	**(Page 6 of 11)**
	Date Prepared:	2025-12-22T15:06:27-05:00

F. OUTDOOR LIGHTING FIXTURE SCHEDULE

For new or altered lighting systems demonstrating compliance with §140.7 / §170.2(e)6 all new luminaires being installed and any existing luminaires remaining or being moved within the spaces covered by the permit application are included in the Table below. For altered lighting systems using the Existing Power method per §141.0(b)2L only new luminaires being installed and replacement luminaires being installed as part of the project scope are included (ie, existing luminaires remaining or existing luminaires being moved are not included). Outdoor lighting attached to multifamily buildings and controlled from the inside of a dwelling unit are included in Table H. and are not included here. All other multifamily outdoor lighting is included here.

Designed Wattage:

01	02		03	04	05	06	07	08	09	10	
S2	EXTERIOR POLE MOUNTED AREA FIXTURE, PERFORMANCE PACKAGE 1, TYPE T3M DISTRIBUTION, 23'-0" SSS SQUARE/RSS ROUND POLE MOUNTING WITH 2'-0" CONCRETE BASE, 120V AC. PROVIDE WITH BI-LEVEL MOTION/AMBIENT SENSOR. COORDINATE FINISH WITH OWNER.	☐ Linear	34	Mfr. Spec	3	Existing Alteration	☐	102	NA: < 6200 lumens	☐	☐
								Total Design Watts:	340		

* NOTES: Selections with a * require a note in the space below explaining how compliance is achieved.
EX: Luminaire is lighting a statue; EXCEPTION 2 to §130.2(b)

[1] FOOTNOTES: Authority Having Jurisdiction may ask for Luminaire cut sheets to confirm wattage used for compliance per §130.0(c) / §160.5(b)
[2] For linear luminaires, wattage should be indicated as W/lf instead of Watts/luminaire. Total linear feet should be indicated in column 05 instead of number of luminaires.
[3] Select "New" for new luminaires in a new outdoor lighting project, or for added luminaires in an alteration. Select "Altered" for replacement luminaires in an alteration. Select "Existing to Remain" for existing luminaires within the project scope that are not being altered and are remaining. Select "Existing Reinstalled" for existing luminaires which are being removed and reinstalled as part of the project scope.
[4] Compliance with mandatory shielding requirements is required for luminaires with initial lumen output >= 6,200 unless exempted by §130.2(b)/ §160.5(c)

G. SHIELDING REQUIREMENTS (BUG)

This section does not apply to this project.

STATE OF CALIFORNIA
Outdoor Lighting CALIFORNIA ENERGY COMMISSION

CERTIFICATE OF COMPLIANCE		NRCC-LTO-E
Project Name: Humboldt County Animal Shelter	**Report Page:**	**(Page 3 of 11)**
	Date Prepared:	2025-12-22T15:06:27-05:00

F. OUTDOOR LIGHTING FIXTURE SCHEDULE

For new or altered lighting systems demonstrating compliance with §140.7 / §170.2(e)6 all new luminaires being installed and any existing luminaires remaining or being moved within the spaces covered by the permit application are included in the Table below. For altered lighting systems using the Existing Power method per §141.0(b)2L only new luminaires being installed and replacement luminaires being installed as part of the project scope are included (ie, existing luminaires remaining or existing luminaires being moved are not included). Outdoor lighting attached to multifamily buildings and controlled from the inside of a dwelling unit are included in Table H. and are not included here. All other multifamily outdoor lighting is included here.

Designed Wattage:

01	02		03	04	05	06	07	08	09	10	
S1	EXTERIOR POLE MOUNTED AREA FIXTURE, PERFORMANCE PACKAGE 1, TYPE BLC4 DISTRIBUTION, 23'-0" SSS SQUARE/RSS ROUND POLE MOUNTING WITH 2'-0" CONCRETE BASE, 120V AC. PROVIDE WITH BI-LEVEL MOTION/AMBIENT SENSOR. COORDINATE FINISH WITH OWNER.	☐ Linear	34	Mfr. Spec	7	Existing Alteration	☐	238	NA: < 6200 lumens	☐	☐

STATE OF CALIFORNIA
Outdoor Lighting CALIFORNIA ENERGY COMMISSION

CERTIFICATE OF COMPLIANCE		NRCC-LTO-E
Project Name: Humboldt County Animal Shelter	**Report Page:**	**(Page 4 of 11)**
	Date Prepared:	2025-12-22T15:06:27-05:00

F. OUTDOOR LIGHTING FIXTURE SCHEDULE

For new or altered lighting systems demonstrating compliance with §140.7 / §170.2(e)6 all new luminaires being installed and any existing luminaires remaining or being moved within the spaces covered by the permit application are included in the Table below. For altered lighting systems using the Existing Power method per §141.0(b)2L only new luminaires being installed and replacement luminaires being installed as part of the project scope are included (ie, existing luminaires remaining or existing luminaires being moved are not included). Outdoor lighting attached to multifamily buildings and controlled from the inside of a dwelling unit are included in Table H. and are not included here. All other multifamily outdoor lighting is included here.

Designed Wattage:

01	02	03	04	05	06	07	08	09	10	
Name or Item Tag	Complete Luminaire Description	Watts per luminaire[1,2]	How is Wattage determined	Total Number Luminaires [3]	Luminaire Status[3]	Excluded per §140.7(a) / §170.2(e)6A	Design Watts	Cutoff Req. > 6,200 initial lumen output§130.2(b) /§160.5(c) [4]	Pass	Fail

STATE OF CALIFORNIA
Outdoor Lighting CALIFORNIA ENERGY COMMISSION

CERTIFICATE OF COMPLIANCE		NRCC-LTO-E
Project Name: Humboldt County Animal Shelter	**Report Page:**	**(Page 9 of 11)**
	Date Prepared:	2025-12-22T15:06:27-05:00

J. LIGHTING ALLOWANCE: PER APPLICATION

This table includes areas using the wattage allowance per application from Table 140.7-B / Table 170.2-S.

01	02	03	04	05	06	07	08	09	10
		CALCULATED ALLOWANCE (Watts)			DESIGN WATTS				
Area Description	Application per Table 140.7-B [1]	# of Locations	Allowance per Location[2]	Extra Allowance (Watts)	Luminaire Name or Item Tag	Watts per Luminaire	# of Luminaires	Design Watts	Additional Allowance (Watts)
Entrances & Exits	Building Entrance/Exit	6	15	90	S1	34	1	34	90
					S2	34	3	102	
Total Design Watts for this Area:								136	
Total Allowance (Watts) All Areas:									90

[1] FOOTNOTES: Primary entrance applications are only available for senior care facilities, healthcare facilities, police stations, hospitals, fire stations, and emergency vehicle facilities.
[2] The Allowance per Location for ATMs is 100W for the first ATM and 35W for each additional per Table 140.7-B /Table 170.2-S.
[3] For luminaires indicated in Table F as linear, wattage in column 07 is W/lf instead of Watts/luminaire. Total linear feet should be indicated in column 08 instead of number of luminaires.

K. LIGHTING ALLOWANCE: SALES FRONTAGE

This section does not apply to this project.

L. LIGHTING ALLOWANCE: ORNAMENTAL

This section does not apply to this project.

M. LIGHTING ALLOWANCE: PER SPECIFIC AREA

This section does not apply to this project.

STATE OF CALIFORNIA
Outdoor Lighting CALIFORNIA ENERGY COMMISSION

CERTIFICATE OF COMPLIANCE		NRCC-LTO-E
Project Name: Humboldt County Animal Shelter	**Report Page:**	**(Page 8 of 11)**
	Date Prepared:	2025-12-22T15:06:27-05:00

I. LIGHTING POWER ALLOWANCE (per §140.7 /§170.2(e))

This table includes areas using allowance calculations per §140.7 /§170.2(e). General Hardscape Allowance is per Table 140.7-A/Table 170.2-R while "Use it or lose it" Allowances are per Table 140.7-B /Table 170.2-S. Indicate which allowances are being used to expand sections for user input. Luminaires that qualify for one of the "Use it or lose it" allowances shall not qualify for another "Use it or lose it" allowance. Outdoor lighting attached to multifamily buildings and controlled from the inside of a dwelling unit are included in Table H. and are not included here. All other multifamily outdoor lighting is included here.

01				
	"Use it or lose it" Allowance (select all that apply) (select all that apply)			
☒ General Hardscape Allowance Table I (below)	☒ Per Application Table J	☐ Sales Frontage Table K	☐ Ornamental Table L	☐ Per Specific Area Table M

Calculated General Hardscape Lighting Power Allowance per Table 140.7-A for Nonresidential & Hotel/Motel

02	03	04	05	06	07	08	09
Area Description	Area Wattage Allowance (AWA)			Linear Wattage Allowance (LWA)			Total General AWA + LWA (Watts)
	Illuminated Area (ft^2)	Allowed Density (W/ft^2)	Area Allowance (Watts)	Perimeter Length (lf)	Allowed Density (W/lf)	Linear Allowance (Watts)	
Parking lot	18451	0.019	350.57	1089	0.15	163.35	513.92
Initial Wattage Allowance for Entire Site (Watts):							
Instances of Initial Wattage Allowance (LZ 0 only)[1]							
Total General Hardscape Allowance (Watts):							513.92

STATE OF CALIFORNIA
Outdoor Lighting CALIFORNIA ENERGY COMMISSION

CERTIFICATE OF COMPLIANCE		NRCC-LTO-E
Project Name: Humboldt County Animal Shelter	**Report Page:**	**(Page 7 of 11)**
	Date Prepared:	2025-12-22T15:06:27-05:00

H. OUTDOOR LIGHTING CONTROLS

This table demonstrates compliance with controls requirements for all new or altered luminaires installed as part of the permit application. For alteration projects, luminaires which are existing to remain (ie untouched) and luminaires which are removed and reinstalled (wiring only) do not need to be included in this table even if they are within the spaces covered by the permit application.
Outdoor lighting for nonresidential buildings, parking garages and common service areas in multifamily buildings must be documented separately from outdoor lighting attached to multifamily buildings and controlled from the inside of a dwelling unit

Mandatory Controls for Nonresidential Occupancies, Parking Garages & Common Areas in Multifamily Buildings

01	02	03	04	05	
Area Description	Shut-Off §130.2(c)3 / §160.5(c)	Auto-Schedule §130.2(c)2 / §160.5(c)	Motion Sensor §130.2(c)3 / §160.5(c)	Field Inspector	
				Pass	Fail
Parking lot: "S1"	Astronomical Timer	Provided	Provided	☐	☐
Parking lot: "S2"	Astronomical Timer	Provided	Provided	☐	☐

[1] FOOTNOTE: Text has been abbreviated, please refer to Table 160.5-A to confirm compliance with the specific light source technologies listed.
[2] Authority having jurisdiction may ask for cutsheets or other documentation to confirm compliance of light source.
[3] Recessed luminaires marked for use in fire-rated installations, and recessed luminaires installed in non-insulated ceilings are excepted from ii and iii.

STATE OF CALIFORNIA
Outdoor Lighting CALIFORNIA ENERGY COMMISSION

CERTIFICATES OF COMPLIANCE		NRCC-LTO-E
Project Name: Humboldt County Animal Shelter	**Report Page:**	**(Page 11 of 11)**
Project Address: 980 Lycoming Ave, McKinleyville, CA 95519	**Date Prepared:**	2025-12-22T15:06:27-05:00

DOCUMENTATION AUTHOR'S DECLARATION STATEMENT

I certify that this Certificate of Compliance documentation is accurate and complete.

Documentation Author Name: Travis Murray	Documentation Author Signature:
Company: Frontier Consulting Engineers	Signature Date: 12/22/2025
Address: 2727 Bechelli lane	CEA/HERS/CEC Certification Identification (if applicable):
City/State/Zip: Redding, CA 96002	Phone: 530-232-6160

RESPONSIBLE PERSON'S DECLARATION STATEMENT

I certify the following under penalty of perjury, under the laws of the State of California:

1. The information provided on this Certificate of Compliance is true and correct.
2. I am eligible under Division 3 of the Business and Professions Code to accept responsibility for the building design or system design identified on this Certificate of Compliance (responsible designer)
3. The energy features and performance specifications, materials, components, and manufactured devices for the building design or system design identified on this Certificate of Compliance conform to the requirements of Title 24, Part 1 and Part 6 of the California Code of Regulations.
4. The building design features or system design features identified on this Certificate of Compliance are consistent with the information provided on other applicable compliance documents, worksheets, calculations, plans and specifications submitted to the enforcement agency for approval with this building permit application.
5. I will ensure that a completed signed copy of this Certificate of Compliance shall be made available with the building permit(s) issued for the building, and made available to the enforcement agency for all applicable inspections. I understand that a completed signed copy of this Certificate of Compliance is required to be included with the documentation the builder provides to the building owner at occupancy.

Responsible Person Name: Nathaniel Warner	Responsible Person Signature:
Responsible Person Scope: Electrical Engineer	
Company: Frontier Consulting Engineers	Date Signed: 12/22/2025
Address: 2727 Bechelli lane	License: E25042
City/State/Zip: Redding, CA 96002	Phone: 530-232-6160

STATE OF CALIFORNIA
Outdoor Lighting CALIFORNIA ENERGY COMMISSION

CERTIFICATE OF COMPLIANCE		NRCC-LTO-E
Project Name: Humboldt County Animal Shelter	**Report Page:**	**(Page 10 of 11)**
	Date Prepared:	2025-12-22T15:06:27-05:00

N. EXISTING CONDITIONS POWER ALLOWANCE (alterations only)

This section does not apply to this project.

O. DECLARATION OF REQUIRED CERTIFICATES OF INSTALLATION

Selections have been made based on information provided in this document. If any selection has been changed by permit applicant, an explanation should be included in Table E. Additional Remarks. These documents must be provided to the building inspector during construction and can be found online

Form/Title
NRCI-LTO-E - Must be submitted for all buildings

P. DECLARATION OF REQUIRED CERTIFICATES OF ACCEPTANCE

There are no NRCA forms required for this project.

Copyright © 2025
All ideas, designs, arrangements and plans indicated or represented by this drawing are owned by, and the property of, NICHOLS, MELBURG and ROSSETTO and were created, evolved and developed for use on, and in conjunction with, the specified project. None of such ideas, designs, arrangements or plans shall be used by, or disclosed to any person, firm or corporation for any purpose whatsoever without the written permission of NICHOLS, MELBURG and ROSSETTO.

NICHOLS MELBURG ROSSETTO
ARCHITECTS + ENGINEERS
300 KNOLLCREST DRIVE
REDDING, CA 96002
(530) 222-3300 (530) 222-3538 FAX
http://www.nmrdesign.com

CONSULTANTS

FRONTIER CONSULTING ENGINEERS
2727 Bechelli Lane · Redding, CA 96002
Ph: (530) 232-6160 · www.frontierce.com

LICENSE STAMPS

REGISTERED PROFESSIONAL ENGINEER
NATHANIEL J. WARNER
No. E25042
EXP. 06-30-2026
ELECTRICAL
STATE OF CALIFORNIA

PROJECT NAME

RENOVATION FOR

Humboldt County Animal Shelter

980 Lycoming Ave
McKinleyville, CA 95519

SHEET TITLE

ELECTRICAL T24 CALCULATIONS

DRAWING STATUS

CONSTRUCTION DOCUMENTS

REVISIONS

Sym.	Description	Date

Drawn By	TM
Date Issued	04-03-2026
Scale	
Project No.	17-6430

SHEET No.

E400