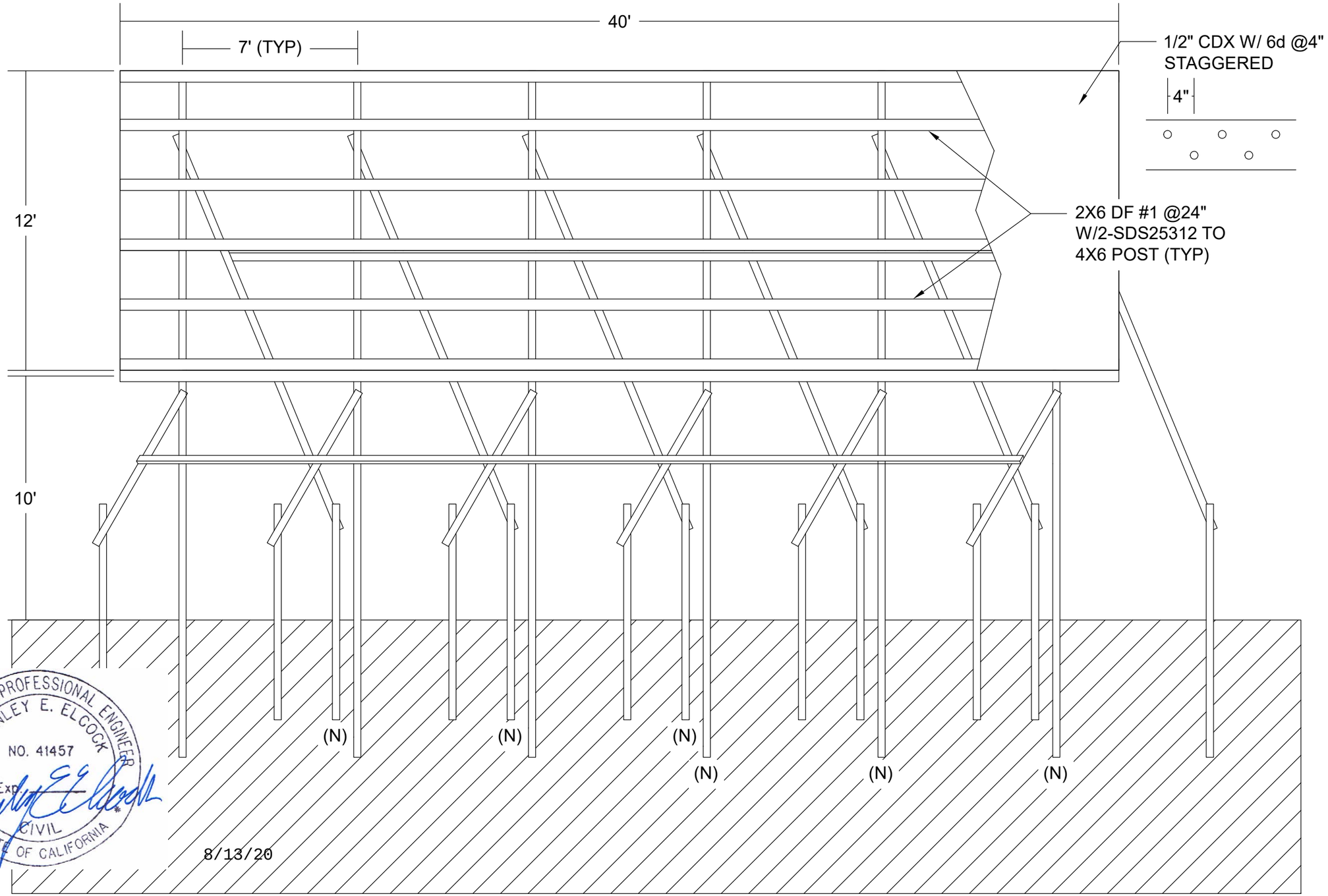

NOTE: ALL FASTENERS ARE GALVINIZED OR STAINLESS STEEL
ALL TIMBER PAINTED DF #1.

FRONT VIEW

1/8" = 1'-0"

SEE ENGINEERING
C41457
791 8th -ST - Suite P
ARCATA, CA 95521
T: 707-498-6315

ALL POINTS
SIGN REPAIR
HIGHWAY 101
BETWEEN EUREKA & ARCATA

PLOT DATE: 12/5/19

DRAWN: CEE

CHECKED BY: SEE

CHECKED DATE:

SCALE: 1/4" = 1'-0"

REVISION DATE:

REVISION DATE:

SHEET: 2 OF 2

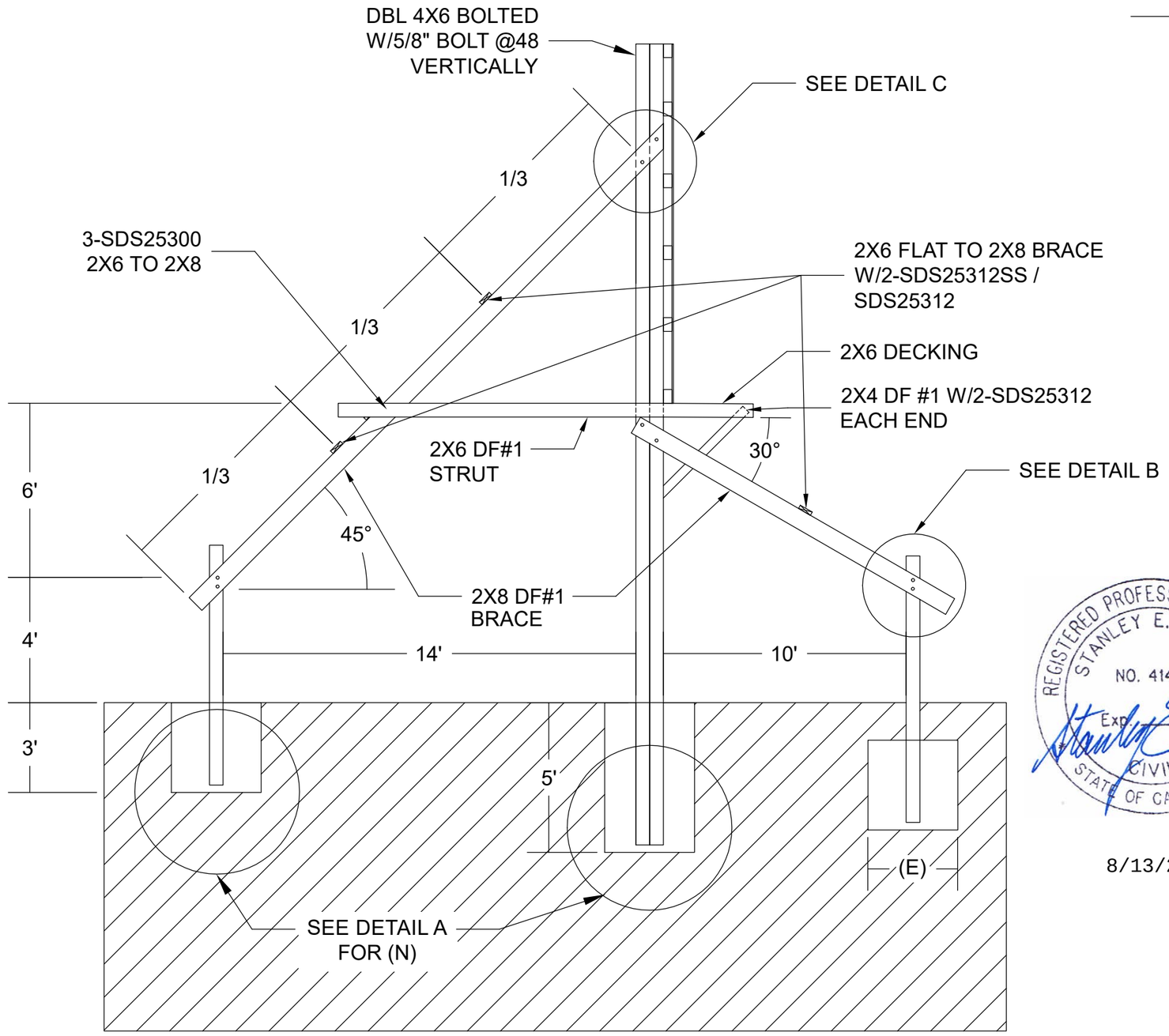

FRONT AND SIDE

1/4" = 1'-0"

NOTE: ALL FASTENERS ARE GALVINIZED OR STAINLESS STEEL

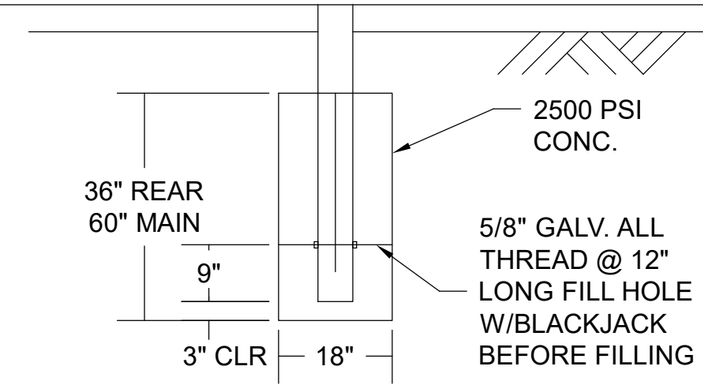

DETAIL A

1/2" = 1'-0"

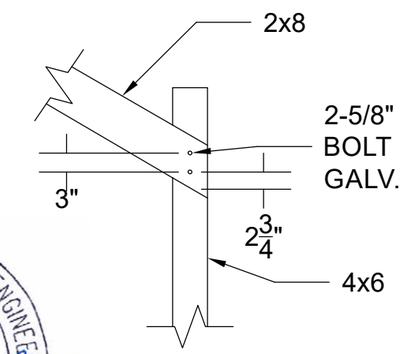

DETAIL B

1/2" = 1'-0"

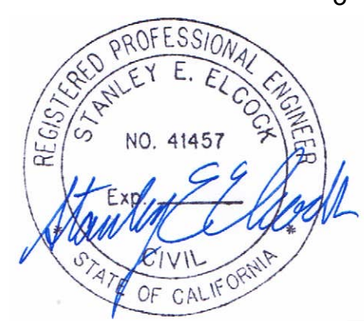

8/13/20

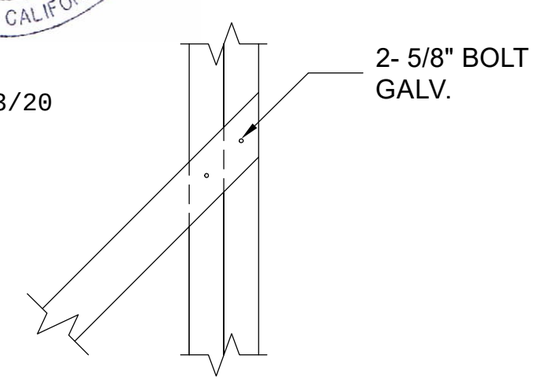

DETAIL C

1/2" = 1'-0"

SEE ENGINEERING
C41457
791 8th -ST - Suite P
ARCATA, CA 95521
T: 707-498-6315

ALL POINTS
SIGN REPAIR
HIGHWAY 101
BETWEEN EUREKA & ARCATA

PLOT DATE:	12/5/19
DRAWN:	CEE
CHECKED BY:	SEE
CHECKED DATE:	
SCALE:	AS SHOWN
REVISION DATE:	
REVISION DATE:	
	SHEET: 1 OF 2

Money for
Agriculture
AMERICAN AGCREDIT
OUTFRONT

November 2019

UNSAFE

photo date: AUGUST 1, 2020

Beach Rates
Vertical Ave
Elk River Rd
½ mile

EXIT 702

looking north
view of billboard
from eastern
edge of Hwy 101
EXIT 702
Herrick Ave
Elk River Rd
1/2 MILE

posts to
be reused

view of Elk River from property

side channel
inlet to Elk River

REVISED FOOTING DETAIL (8-29-20)

All Points
Bill Board
Repair
7-30-20 JH

UPLIFT:

$2100 \times 22.5 = 14R_1 + 10R_2$

USE (E) R_2 FOUNDATION

Friction = 100 PSF x 4' deep x 2.42 = 968#

BEARING = 500 PSF x 1.77 □' = 883#

1851#

$2100 \times 22.5 = 14R_1 + 10(968)$

$R_1 = 2684\# \downarrow$

Add conc wt.

$\pi(1.5^2)/4 \times 3' \times 150 = 795\#/\text{POST}$

$2684/6 + 795 = 1242\#/\text{POST}$

⟹ (N) REAR POST FOUNDATION
↳ 18" x 3' deep conc.

REGISTERED PROFESSIONAL ENGINEER
STANLEY E. ELCOCK
NO. 41457
Exp.
CIVIL
STATE OF CALIFORNIA

8/29/20

Alternate Footings (MAIN)

Friction = 100 PSF x 5' deep x 4.71 = 2356#

BEARING = 500 PSF x 1.77 □' = 883#

1242# < 3239# OK

⟹ (N) MAIN POST FOUNDATION
↳ 18" x 5' deep conc.

SEE Engineering
P.O. Box 308 ~ Arcata, CA. 95518
Phone (707) 498-6315 Fax (707) 822-8703
www.seeengineering.com
PLANS * CONSTRUCTION * SPECIAL PROJECTS * SHORING * TEMPORARY SYSTEMS
Stanley Elcock, P.E. C41457

Client: Allpoints Signs, Owner

Project: Sign Repair

Location:

Highway 101 Between Eureka and Arcata
Eureka, CA.

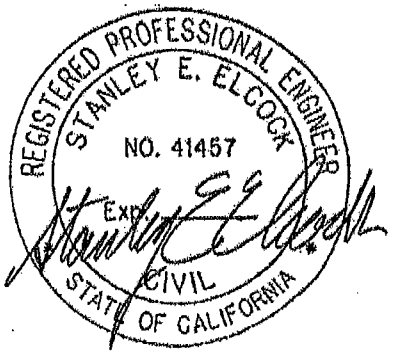

CALCULATIONS

Framing

References

2016 California Building Code

Western Woods Use Book

December 5, 2019

ALL POINTS
BILL BOARD
REPAIR
12-3-19

1/

WIND

$0.00256(85)^2(0.85)(1)(1.35) = 21.2$ PSF

USE 25 PSF

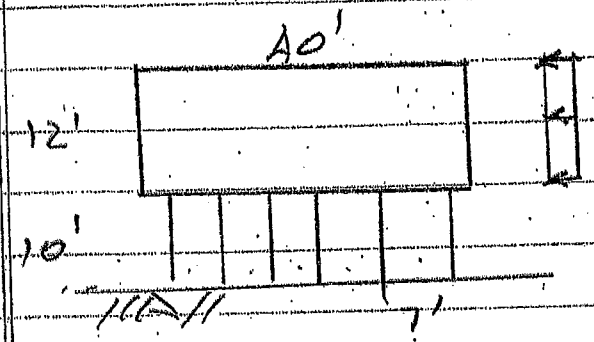

$25 \times 12 \times 40 = 12000^{\#}$ Total

$25\,PSF \times 12 \times 7' = 2100^{\#}$ / POST

ΣM: $12000 \times (10+6) = 192000$ ft-lb OTM

$192000 / 6$ POSTS $= 32000$ ft-lb / POST OTM

AVG

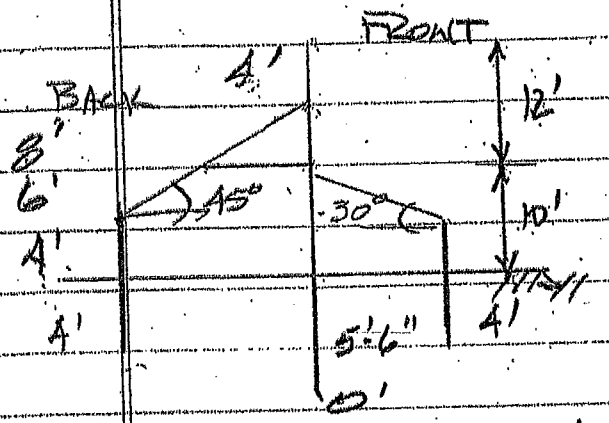

ΣM_O: $2100 \times 16' = 18F_{B1} + 9F_{F1}$

$F_{B1} = F_{F1} = 1244^{\#}$

5/8" bolts $= 870 \times 1.33 \times 2$

$= 2314 > 1244$

FOR 2x6: $1244 / 8.25 = 151$ psi

$480{,}000 / (L^2/1.5^2) = 151$ $L_{max} = 7'$

FOR 2x8: $1244 / 10.88 = 114$ psi

$480000 / (L^2/1.5^2) = 114$ $L_{max} = 8'$

$14\sqrt{2} = 20'$

2-5/8" bolt to 4x6

USE 2x6 P.T. DF No.1 diagonal back BRACE w/ 2-2x6 @ 7' max w/ 2-SDS x 3½" Flat 2x6 to 2x8 diagonal brace

ALL POINTS
BILLBOARD
REPAIR
12-3-19 2)

HORIZONTAL STRUT TO BACKBRACE

$480000/(96^2/1.5^2) = 117$ psi

$117 \times 8.25^{\square''} \leq 965^{\#}$ capacity 2x6

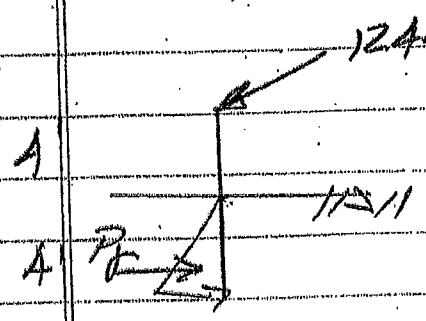

$MP_j = 90pcf \times \frac{1}{2}(4)^2 \frac{1}{3}(4) \tan^2 60$

$= 2880$ ft-lb

$OTM = \frac{1244}{\sqrt{2}} \times 8 = 7037$ ft-lb

$MP_j = 45D^3 = 7037$

$D = 5.4' \times 1.4$

$= 7.5'$ min depth

SIGN WEIGHT:

1/2" CDX $= 1.5 \times 7 \times 12 = 126^{\#}$/POST

dbl 4x6 $= 35pcf \times \frac{38.5^{\square''}}{144} \times 30' = 281^{\#}$/POST

BRACES

2x6: $35 \times (8.25/144)(20') = 40^{\#}$/POST

2x6 @ 24 HORIZ. $= (40^{\#}/20)7' \times 6 = 84^{\#}$/POST

$531^{\#}$

Add LL $= 300^{\#}$ POINT LOAD $300^{\#}/1.33 = 225$

$757^{\#}$ Total/POST

$19.25^{\square''} \times 2$ POSTS $= 38.5^{\square''} = 0.27^{\square'}$

$757^{\#}/0.27^{\square'} = 2800$ PSF > BAY MUD

Side Friction $= 120$ PSF $\times 7.5' \times (3.5 \times 2 + 11 \times 2)/12$

$= 1812^{\#} + 500 \times 0.27 = 1947^{\#} > 757^{\#}$

SEE REVISED FOOTING DETAIL

ALL POINTS
BILLBOARD
REPAIR 12-3-19 3/

FRONT BRACE

$1244 \times 1.1547 = 1437^{\#}$

$1437 / 10.88 = 132 psi$

$480000 / L^2 / 2.25 = 132 \quad L_{max} = 7\frac{1}{2}'$

$\Longrightarrow$ Add 2x6 flat @ midspan

RE-CHECK POST EMBEDMENT

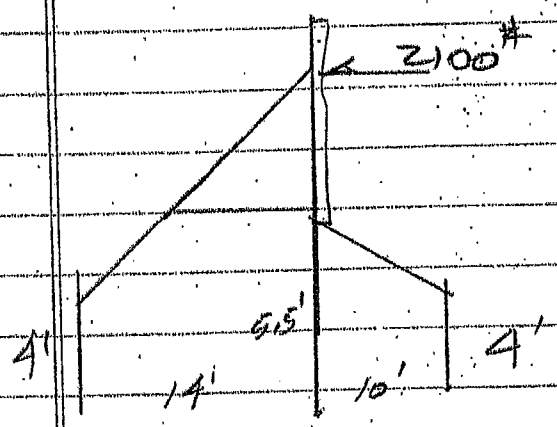

ΣM_o: $MR_j = 2880$ ft-lb

4x6 dbl post

$2 \times 90 (\frac{1}{2})(D)^2 \frac{1}{3}(D) tan^2 60$

$= 45 D^3$

$7037 - 2880 = 45 D^3$

$D_{4\times6} = 4.5' \times 1.4$

$= 6.5'$

UPLIFT / OT:

$2100 \times 22.5 = 14 R_1 + 10 R_2 \downarrow$

$47250 = 14 R_1 + 10(100 PSF \times 4 \times 242)$

$+ 10(500 PSF \times 38.5^{\#}/144)$

$R_1 = 2588^{\#} \uparrow$ (NG)

Add deadman:

$MR_j = 7037 / 2880 = 2.5'$ min dia

check dbl 4x6 bolted:

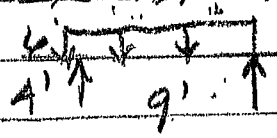

$w = 175 PLF \quad 175(9)^2 / 8 \times 12 / 765 = 28 in^3$

dbl 4x6 (OK)

All Points
Billboards
12-5-19 4/

3' dia x4 = 150 π(3)²/4 x 4
= 4241# / π(9)/4 = 600 PSF

For 500 PSF:
3.5' dia 531# / π(3.5)²/4 = 55.2 PSF
500-55.2 = 444.8 PSF DL PCC
UNREINF PCC = 145 PCF
444.8/145 = 3.1' DEEP (OK)
145 x 3' x π(3.5)²/4 = 4185# DEAD MAN

⟹ USE 2pl 4x6 MAIN POST Bolted
w/ 5/8" MB GALVANIZED @ 4' c/c
Add 5/8" A/I Thread Galvanized x 24" LONG
in POST 12" FROM BOTTOM

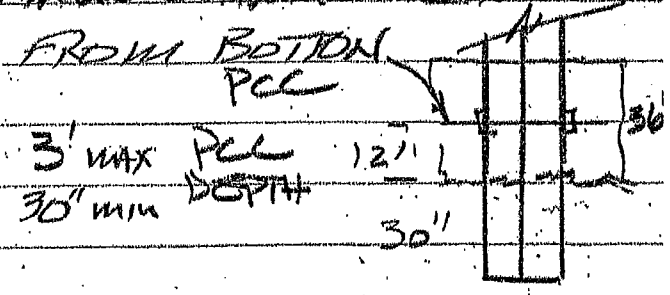

2x6 Flat cantilever:
(25PSF x 2)(2.5)²/2 x 12/850 x 1.25 = 1.76 in³ (OK)
Δ = 50(2.5)⁴ 1728 / 8(1.6x10⁶)(1.55) = 0.17" = L/176 < L/120
⟹ 2x6 Flat @24 cantilever is Adequate

CDX Nailing:
Ld = 26#/in x 1.5" = 39# 50PSF x 2' x 7' = 700#
700/39 = 18 nails over 7' = Ld @ 4" oc

2x6 Flat @24 Fasteners:
50PSF x 2 x 7 = 700#/325#/SDS = 2 req. SDS25312 (SS)

Reconstruction Plan

Construction and reconstruction of billboards is performed by a 3-5 man crew and is expected to take 2-4 days. No construction equipment is needed. We use shovels and post hole diggers for the post, battery powered hand tools, ladders, and clamps, bolts and screws. No temporary structures or materials are required to reconstruct, IE we do not need to build scaffolding or set temporary brace post of any kind.

Below is a general workflow for how this location will be repaired.

1. Crews will began demoing all non-reusable elements of the structure. This consist of using sawzalls to cut wood into sizes we are able to carry. Once small enough to carry all non-usable elements are stacked in a pile on the shoulder of the highway behind the guardrail.

2. Once all non-usable parts are removed we will begin repairing the structure. A number of the vertical supports for the billboard actually broke about 8' up the post. In these cases, the vertical uprights will be reused. Six (6) of the damaged posts will need to be replaced with new wooden framing. Three (3) of the posts to be replaced are main vertical supports (4x6) and the other three (3) posts (2x6) tie to horizontal bracing at the rear of the billboard. Holes for the six (6) new posts will be 18 inches wide and dug within the same location as the holes for the damaged supports they are replacing. Holes for the three (3) new main vertical supports will be 5 feet deep and holes for the three (3) new rear brace supports will be 3 feet deep. Concrete will be poured into each hole during installation of the six (6) new posts.

3. Once all post holes are dug we set new upright in holes and hand mix bags of concrete into each hole one bag at a time.
4. Once all posts are set you connect main post to back brace post.
5. Run new horizontal stringers connecting all main posts.
6. Mount front and rear catwalks.
7. Sheet face with plywood
8. Install new billboard wrap

Best Management Practices

As already outlined above, the repair and maintenance of a billboard structure has a very minimal impact as it is just a few people working with hand tools.

No gas-powered construction equipment is used so there is nothing to spill.

All new materials are stacked on the shoulder of the highway behind the guardrail until they are needed.

Construction debris only consist of empty bags of concrete and off cuts of wood, once created all bags are put into a trash bag and all off cuts are stacked on the shoulder of the highway until they are loaded up.

Soil from post holes will be minimal. During excavation of the new holes, care will be taken to ensure no spoils are deposited within nearby wetland habitat. All spoils will be staged in buckets before being removed from the site.